MATERIALS AND FINISHES

BODY, CRIMP TUBE, JAM NUT: BRASS
PLATED NICKEL

CONTACT: BERYLLIUM COPPER
PLATED GOLD

INSULATOR: TEFLON

LOCK WASHER: PHOSPHOR BRONZE
PLATED NICKEL

SHINK TUBE: VERSAFIT OR EQUIVALENT

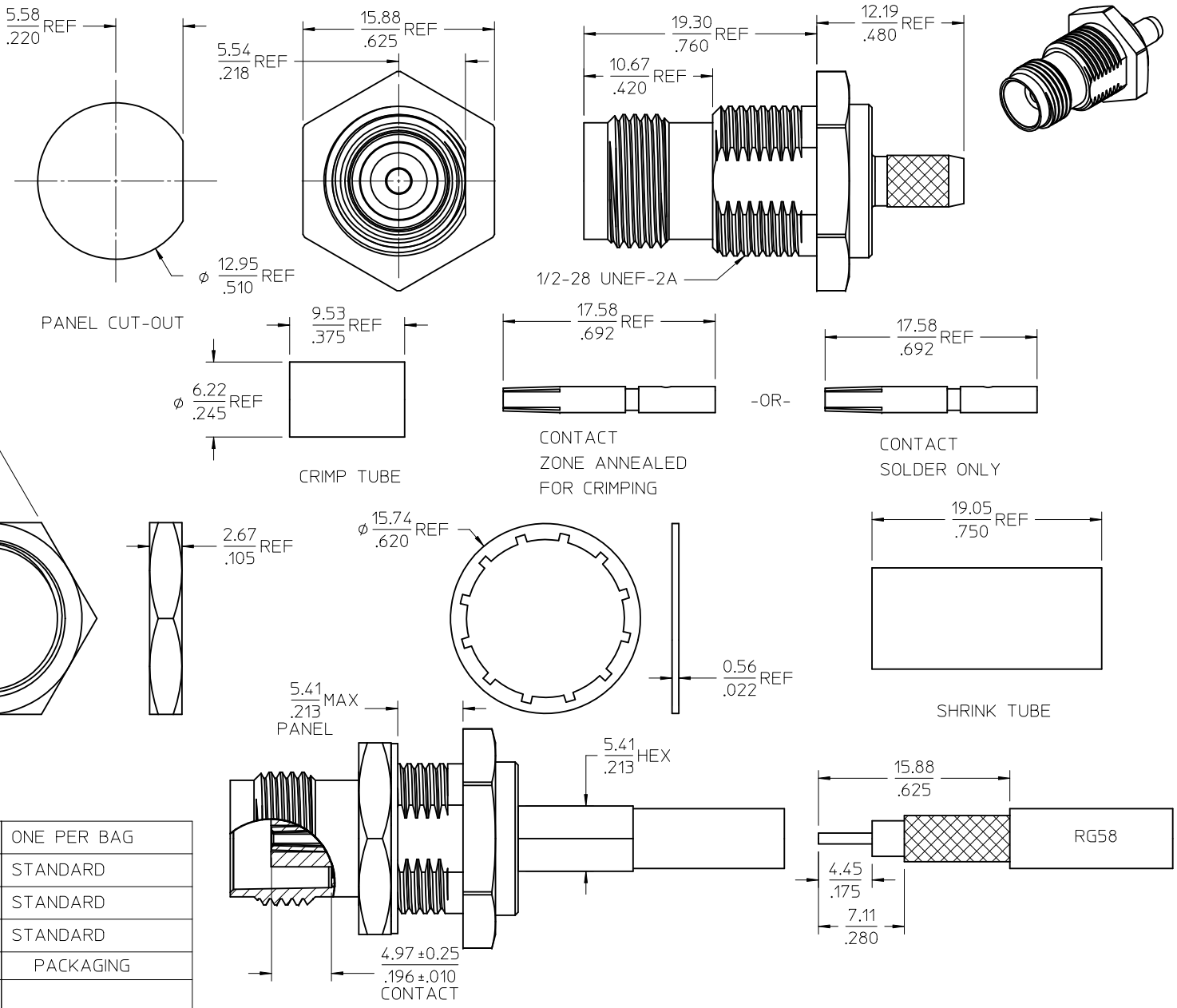

PART NO.	CONTACT	SHRINK TUBE	PACKAGING
73216-0103	CRIMP/SOLDER	NOT INCLUDED	ONE PER BAG
73216-0102	CRIMP/SOLDER	INCLUDED	STANDARD
73216-0101	SOLDER ONLY	NOT INCLUDED	STANDARD
73216-0100	CRIMP/SOLDER	NOT INCLUDED	STANDARD

CHG: "PACKAGING" WAS "FINISH" IN TABLE
EC NO: URF2012-0398 2012/01/10
DRWN:BOMALLEY 2012/01/10
CHKD:AZR 2012/01/11
APPR: JWIENER
DESCRIPTION
A2
REV

QUALITY SYMBOLS
▼=0
▽C=0

GENERAL TOLERANCES (UNLESS SPECIFIED)

	mm	INCH
4 PLACES	± ---	± ---
3 PLACES	± ---	± ---
2 PLACES	± ---	± ---
1 PLACE	± ---	± ---

ANGULAR ± 2 °

DRAFT WHERE APPLICABLE MUST REMAIN WITHIN DIMENSIONS

DIMENSION STYLE: MM/IN
SCALE:
DESIGN UNITS: METRIC
THIRD ANGLE PROJECTION

DRAWN BY: AZR DATE: 2008/05/09
CHECKED BY: SSS DATE: 2008/05/09
APPROVED BY: JDW DATE: 2008/05/09

TITLE: TNC JACK BULKHEAD STRAIGHT 50 OHM RG58 TNC-JC, EWR-1499

molex MOLEX INCORPORATED

MATERIAL NO.: SEE TABLE
DOCUMENT NO.: SD-73216-010
SHEET NO.: 1 OF 1
SIZE: C

THIS DRAWING CONTAINS INFORMATION THAT IS PROPRIETARY TO MOLEX INCORPORATED AND SHOULD NOT BE USED WITHOUT WRITTEN PERMISSION