MATERIALS AND FINISHES:

BODY: ZINC ALLOY
PLATED NICKEL

RING: BRASS
PLATED NICKEL

LEGS: BRASS
PLATED TIN

CONTACT FRONT: PHOSPHOR BRONZE
PLATED GOLD

CONTACT REAR: BRASS
PLATED GOLD

INSULATOR: TEFLON

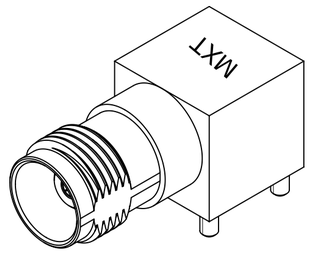

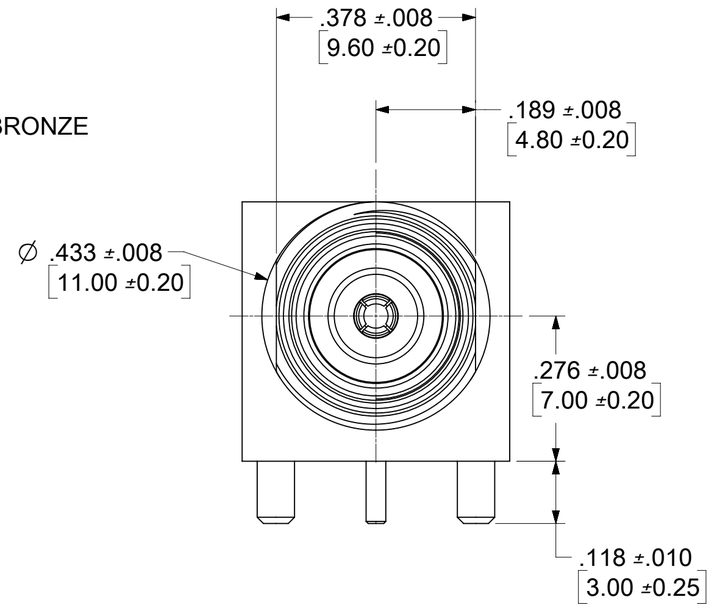

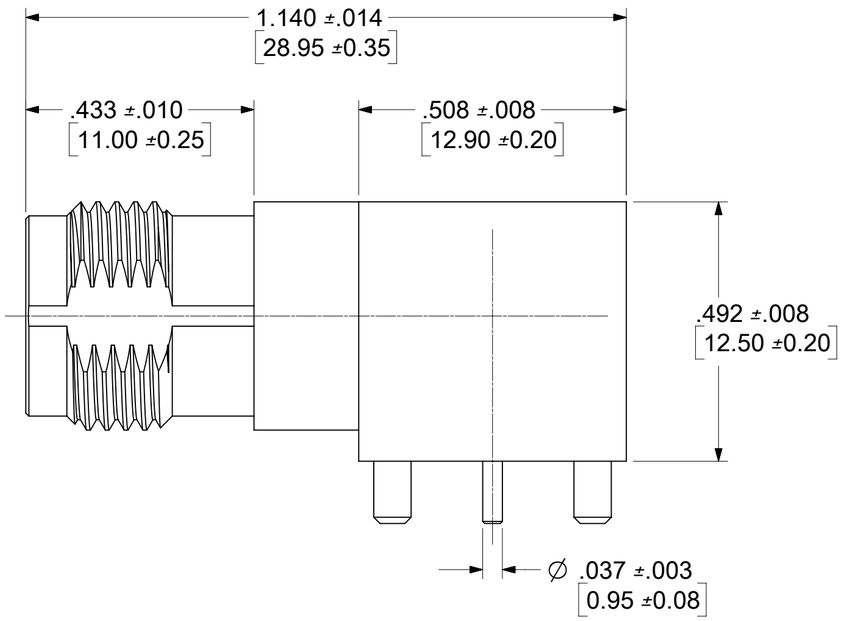

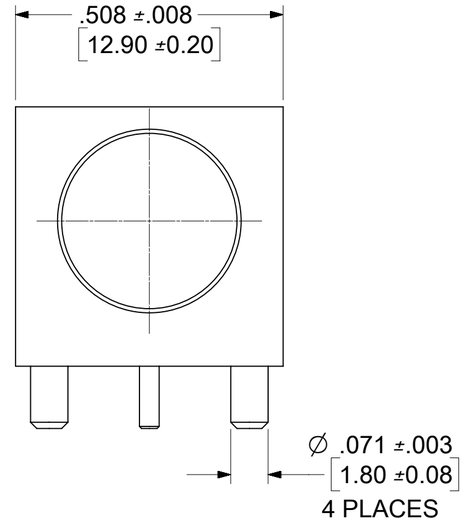

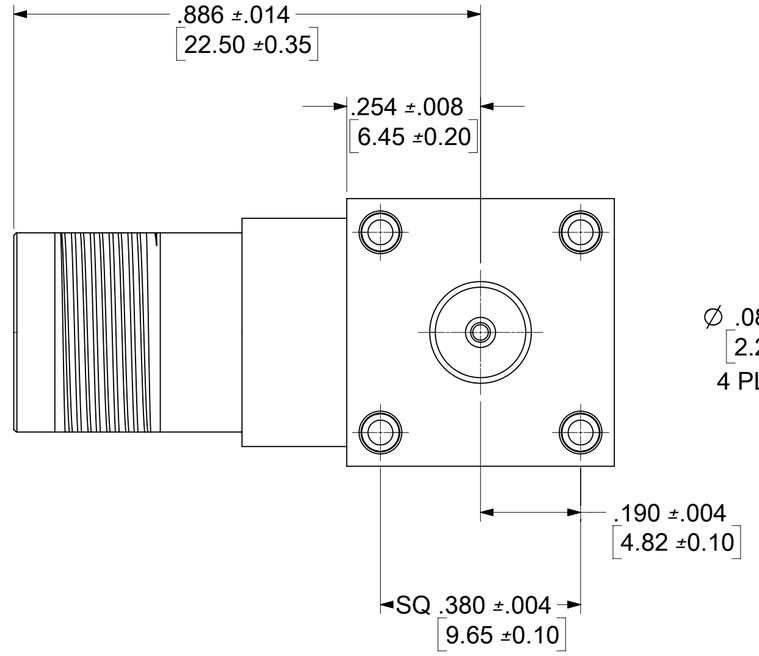

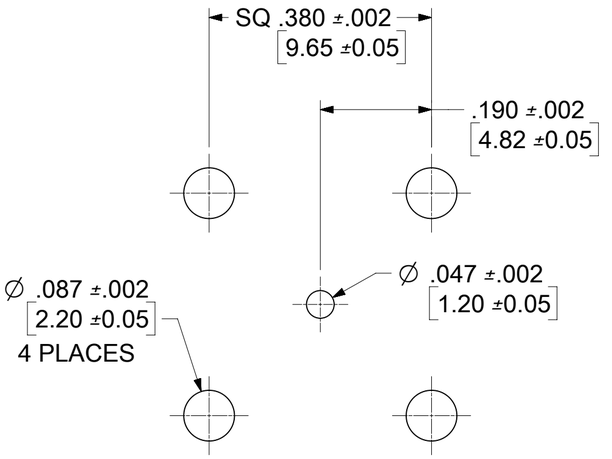

RECOMMENDED PCB LAYOUT

73216-2710	73100-0135 ; ONE PER BAG WITH LABEL
73100-0135	TRAY
PART NO.	PACKAGING

PS-89675-1400	PRODUCT SPECIFICATION
MIL-STD-346A, FIG. 313.2	INTERFACE
SPECIFICATION	DESCRIPTION

REV	DATE	DESCRIPTION
A2	2020/4/23	ADD TOLERANCE PER EWR #13763-A

DOCUMENT STATUS	P1	RELEASE DATE	2020/04/30 09:39:32

THIS DRAWING CONTAINS INFORMATION THAT IS PROPRIETARY TO MOLEX ELECTRONIC TECHNOLOGIES, LLC AND SHOULD NOT BE USED WITHOUT WRITTEN PERMISSION

DIMENSION UNITS	SCALE
INCH/MM	NTS

GENERAL TOLERANCES (UNLESS SPECIFIED)

ANGULAR TOL	± 2.0 °
4 PLACES	±
3 PLACES	±
2 PLACES	±
1 PLACE	±
0 PLACES	±

DRAFT WHERE APPLICABLE MUST REMAIN WITHIN DIMENSIONS

CURRENT REV DESC:

EC NO: 636691
DRWN: RYEH 2020/04/23
CHK'D: YCHENG 2020/04/30
APPR: YCHENG 2020/04/30

INITIAL REVISION:
DRWN: AROBERTSON 2011/03/31
APPR: JWIENER 2011/04/04

molex

TNC JACK RA
PCB TH 50 OHM TNC-J/PCB

PRODUCT CUSTOMER DRAWING

DOCUMENT NUMBER	DOC TYPE	DOC PART	REVISION
SD-73100-0135	PSD	001	A3

THIRD ANGLE PROJECTION	DRAWING	SERIES	MATERIAL NUMBER	CUSTOMER	SHEET NUMBER
	C-SIZE	73100	SEE TABLE	GENERAL MARKET	1 OF 1

FORMAT: master-tb-prod-C
REVISION: J
DATE: 2020/01/14

MATERIALS AND FINISHES

BODY, CAP: ZINC ALLOY
PLATED NICKEL

RING: BRASS
PLATED NICKEL

LEGS: BRASS
PLATED TIN

CONTACT FRONT: PHOSPHOR BRONZE
PLATED GOLD

CONTACT REAR: BRASS
PLATED GOLD

INSULATORS: TEFLON

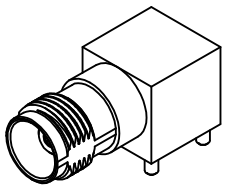

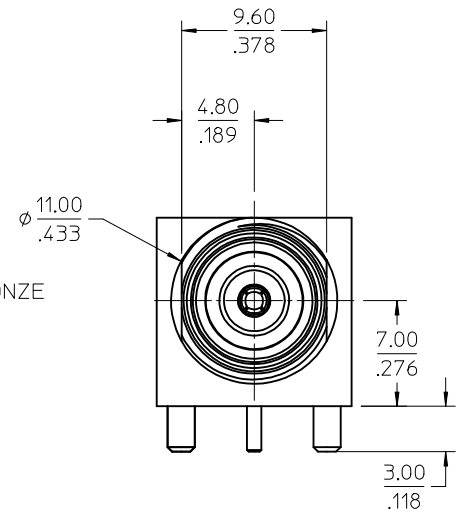

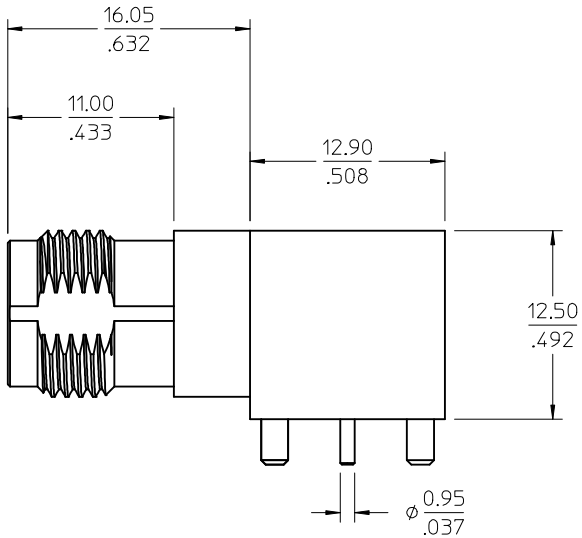

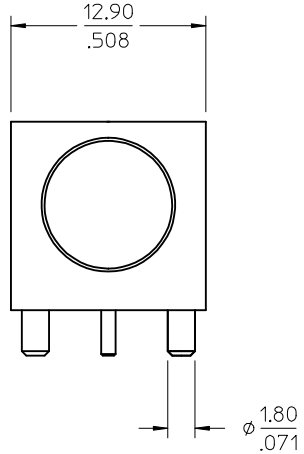

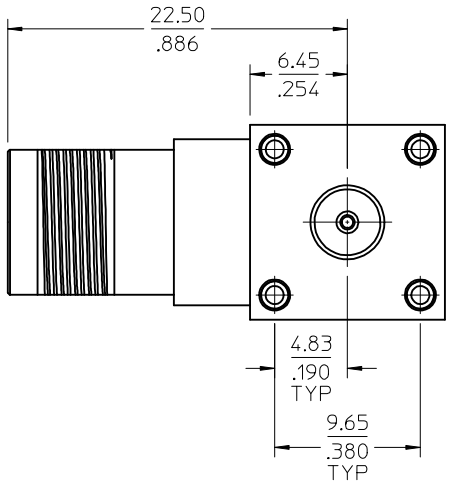

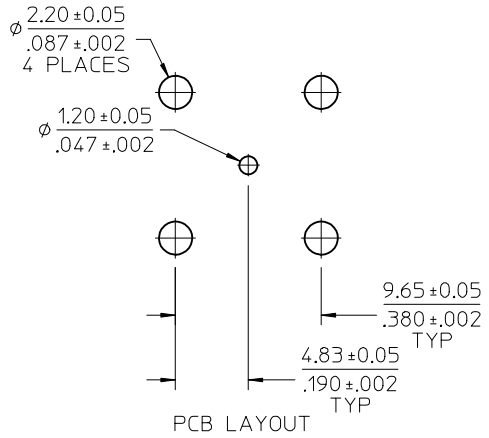

PCB LAYOUT

73216-2710	1 PIECE 73100-0135 IN SINGLE BAG WITH LABEL
73100-0135	STANDARD
PART NO.	PACKAGING

PS-89675-1400	PRODUCT SPECIFICATION
MIL-STD-348A, FIG. 313.2	INTERFACE
SPECIFICATION	DESCRIPTION

CHG: CAP MATERIAL
WAS BRASS.
EC NO: URF2015-0552 2015/04/07
DRWN:AROBERTSON 2015/04/07
CHKD:SSS
APPR:AROBERTSON 2015/04/10
DESCRIPTION

A1
REV

QUALITY SYMBOLS
▼=0
Ⓒ=0

GENERAL TOLERANCES (UNLESS SPECIFIED)

	mm	INCH
4 PLACES	± ---	± ---
3 PLACES	± ---	± ---
2 PLACES	± ---	± ---
1 PLACE	± ---	± ---

ANGULAR ± 2 °

DRAFT WHERE APPLICABLE MUST REMAIN WITHIN DIMENSIONS

DIMENSION STYLE: MM/IN
SCALE:
DESIGN UNITS: METRIC
THIRD ANGLE PROJECTION

DRAWN BY: AROBERTSON DATE: 2011/04/01
CHECKED BY: SSS DATE: 2011/04/01
APPROVED BY: JWIENER DATE: 2011/04/04

TITLE
TNC JACK RA
PCB TH 50 OHM
TNC-J/PCB, EWR-4676

molex MOLEX INCORPORATED

MATERIAL NO.: SEE TABLE
DOCUMENT NO.: SD-73216-271
SHEET NO.: 1 OF 1

SIZE C

THIS DRAWING CONTAINS INFORMATION THAT IS PROPRIETARY TO MOLEX INCORPORATED AND SHOULD NOT BE USED WITHOUT WRITTEN PERMISSION