MATERIALS AND FINIHES

BODY, CAP BRASS
PLATED GOLD (10 MICROINCHES MIN)
OVER CHEMICAL NICKEL

INSULATOR TEFLON

CENTER CONTACT BERYLLIUM COPPER
PLATED GOLD (10 MICROINCHES MIN)
OVER CHEMICAL NICKEL

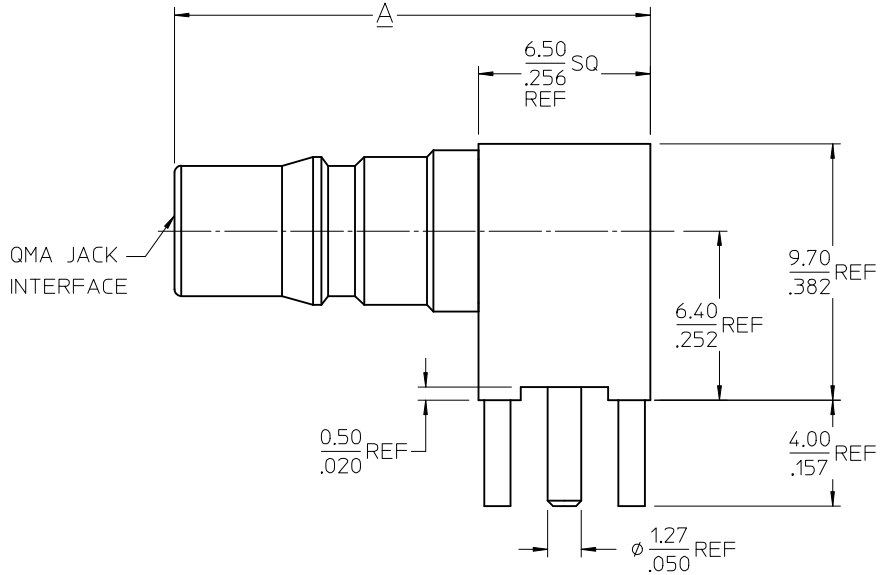

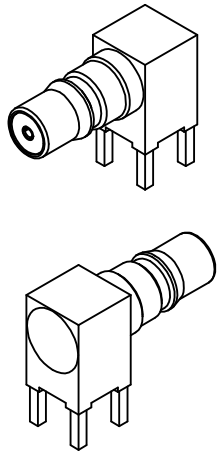

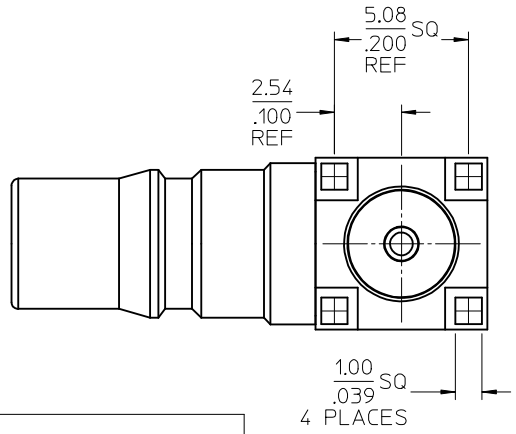

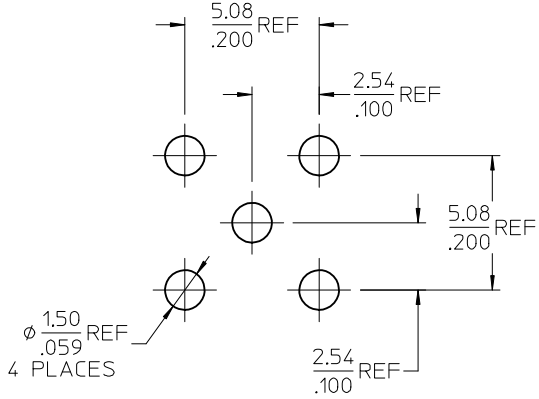

RECOMMENDED PCB LAYOUT

PART NO.	DIM A	PACKAGING
73254-0242	21.00/.827 REF	BAG
73254-0241	18.00/.709 REF	P/N 73254-0240, ONE PER BAG
73254-0240	18.00/.709 REF	TRAY

CHG: UPDATE PACKAGING FOR -0240 & -0242 PER RF15-E217
EC NO: URF2015-0665 2015/05/27
DRWN:RYEH
CHKD:
APPR:YCHENG 2015/05/29
DESCRIPTION
REV

A4

QUALITY SYMBOLS
=0
=0
=0

GENERAL TOLERANCES (UNLESS SPECIFIED)

	mm	INCH
4 PLACES	± ---	± ---
3 PLACES	± ---	± ---
2 PLACES	± ---	± ---
1 PLACE	± ---	± ---
0 PLACE	±	±

ANGULAR ± 2 °

DRAFT WHERE APPLICABLE MUST REMAIN WITHIN DIMENSIONS

DIMENSION STYLE: MM/IN
SCALE: 7:1
DESIGN UNITS: METRIC
THIRD ANGLE PROJECTION

		DATE
DRAWN BY	SSS	2005/02/08
CHECKED BY	TEF	2005/02/08
APPROVED BY	JDW	2005/02/08

TITLE: QMA JACK, R/A, PCB 50 OHMS, EWR2710 QMA-J/PCB

molex

MATERIAL NO.: SEE TABLE
DOCUMENT NO.: SD-73254-024
SHEET NO.: 1 OF 1
SIZE: C

THIS DRAWING CONTAINS INFORMATION THAT IS PROPRIETARY TO MOLEX INCORPORATED AND SHOULD NOT BE USED WITHOUT WRITTEN PERMISSION