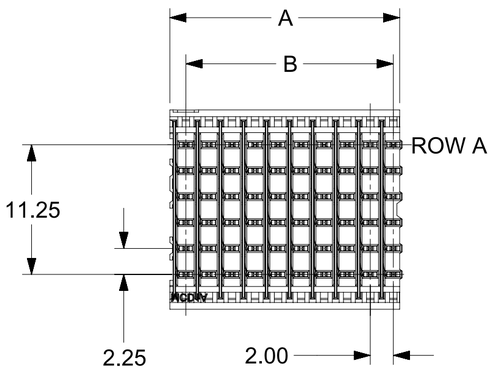

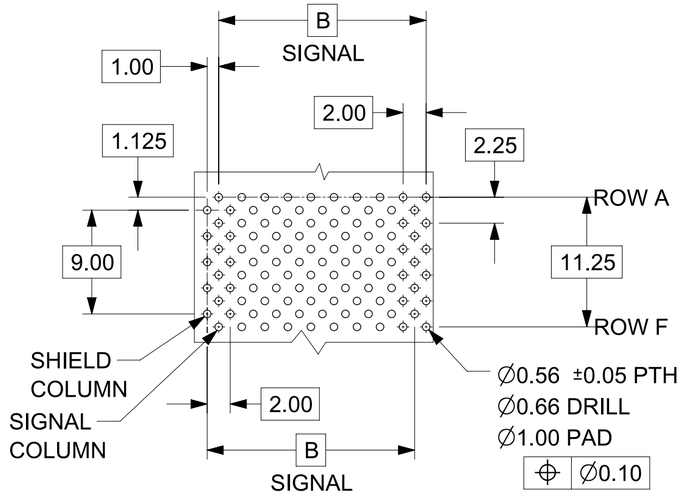

BLACK PLANE HOLE PATTERN
RECOMMENDED DIMENSIONS

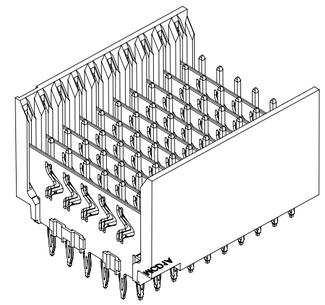

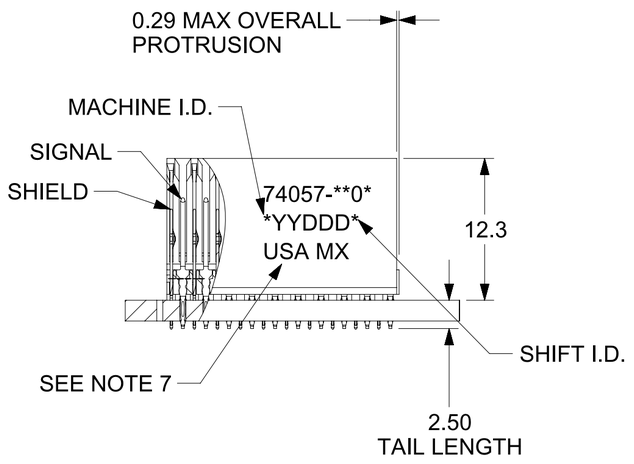

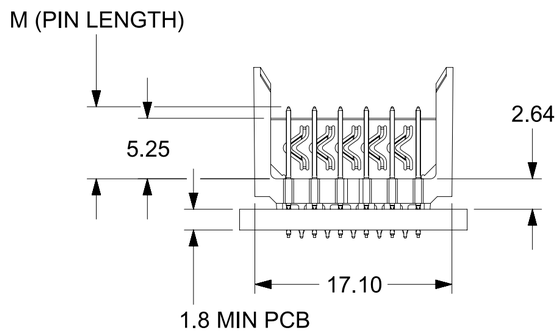

NOTES:
1. MATERIALS:
   HOUSING - LIQUID CRYSTAL POLYMER (LCP),
   GLASS-FILLED, UL 94V-0, COLOR: BLACK
   SIGNAL PIN & SHIELD - COPPER ALLOY
2. FINISHES:
   CONTACT AREA: SELECTIVE GOLD (Au)
   PCB TAILS: SELECTIVE MATTE TIN (Sn)
   NICKEL (Ni) OVERALL.
3. THIS PART CONFORMS TO MOLEX PRODUCT SPECIFICATION PS-74031-999
4. FOR MIXED CONTACT LENGTHS CONSULT MOLEX FOR AVAILABILITY
5. FOR SPECIFIC MATERIAL NUMBERS & MATING INFORMATION REFER TO SHEET 2
6. PACKAGE PER PK-74057-003
7. EITHER MARK PART WITH PART NUMBER & DATE CODE APPROXIMATELY WHERE SHOWN OR PLACE LABEL ON THE TUBE.
8. MAPS (MOLEX ADVANCED PLATING SYSTEM)

THIS DRAWING CONTAINS INFORMATION THAT IS PROPRIETARY TO MOLEX ELECTRONIC TECHNOLOGIES, LLC AND SHOULD NOT BE USED WITHOUT WRITTEN PERMISSION

DIMENSION UNITS	SCALE
MM	2.5:1

GENERAL TOLERANCES (UNLESS SPECIFIED)

	MM	INCH
4 PLACES	±	±
3 PLACES	±	±
2 PLACES	± 0.250	±
1 PLACE	± 0.38	±
0 PLACES	±	±
ANGULAR TOL	± 0.5°	

DRAFT WHERE APPLICABLE MUST REMAIN WITHIN DIMENSIONS

CURRENT REV DESC: REMOVED OBSOLETED PART NUMBERS AS PER PCN#515988

STATUS: Production
DRWN: Sampreet S Mirajkar 2025-11-14
CHK'D: Ganesh Rao B 2025-12-01
APPR: Gurunandan GA 2025-12-01

INITIAL REVISION:
DRWN: MWANG 1998/11/09
APPR: SMILLER 2012/05/23

THIRD ANGLE PROJECTION

DRAWING	SERIES
C-SIZE	74057

molex

VHDM 6 ROW
OPEN END BACKPLANE SALES ASSEMBLY

PRODUCT CUSTOMER DRAWING

DOCUMENT NUMBER	DOC TYPE	DOC PART	REVISION
SD-74057-002	PSD	001	N5

MATERIAL NUMBER	CUSTOMER	SHEET NUMBER
SEE TABLE	GENERAL MARKET	1 OF 3

FORMAT: Engelega-TC-tb-prod-C
REVISION: B
DATE: 2023/10/23

PART NUMBER	COLUMN	NUMBER OF SIGNAL PIN	NUMBER OF SHIELD	A	B	M	GOLD THICKNESS MICROMETER	TIN THICKNESS MICROMETER
74057-6001	10	60	10	20.00	18.00	4.75	0.25 MAPS	0.76-1.52
74057-9006							1.27	
74057-6501	15	90	15	30.00	28.00		0.25 MAPS	
74057-9501							0.76	
74057-9506							1.27	
74057-7001	25	150	25	50.00	48.00		0.25 MAPS	
74057-8506							1.27	
74057-6002	10	60	10	20.00	18.00	6.25	0.25 MAPS	
74057-9002							0.76	
74057-9007							1.27	
74057-6502	15	90	15	30.00	28.00		0.25 MAPS	
74057-9502							0.76	
74057-9507							1.27	
74057-7002	25	150	25	50.00	48.00		0.25 MAPS	
74057-8502							0.76	
74057-8507							1.27	
74057-6003	10	60	10	50.00	48.00	4.25	0.25 MAPS	
74057-9003							0.76	
74057-9008							1.27	
74057-6503	15	90	15	30.00	28.00		0.25 MAPS	
74057-9503							0.76	
74057-9508							1.27	
74057-7003	25	150	25	50.00	48.00		0.25 MAPS	
74057-8508							1.27	
74057-9009	10	60	10	20.00	18.00	5.15	1.27	
74057-6504	15	90	15	30.00	28.00		0.25 MAPS	
74057-9504							0.76	
74057-9509							1.27	
74057-8504	25	150	25	50.00	48.00		0.76	
74057-8509							1.27	

PART NUMBER	COLUMN	NUMBER OF SIGNAL PIN	NUMBER OF SHIELD	A	B	M	GOLD THICKNESS MICROMETER	TIN THICKNESS MICROMETER
74057-1006	10	60	10	20.00	18.00	4.75	1.27	0.76-1.52
74057-1501	15	90	15	30.00	28.00		0.76	
74057-1506							1.27	
74057-2506	25	150	25	50.00	48.00		1.27	
74057-1002	10	60	10	20.00	18.00	6.25	0.76	
74057-1502	15	90	15	30.00	28.00		0.76	
74057-1507							1.27	
74057-1008	10	60	10	20.00	18.00	4.25	1.27	
74057-1503	15	90	15	30.00	28.00		0.76	
74057-1508							1.27	
74057-2508	25	150	25	50.00	48.00		1.27	
74057-1004	10	60	10	20.00	18.00	5.15	0.76	
74057-1009							1.27	
74057-1504	15	90	15	30.00	28.00		0.76	
74057-1509							1.27	

LEAD FREE
(FORMERLY TIN/LEAD) CHART

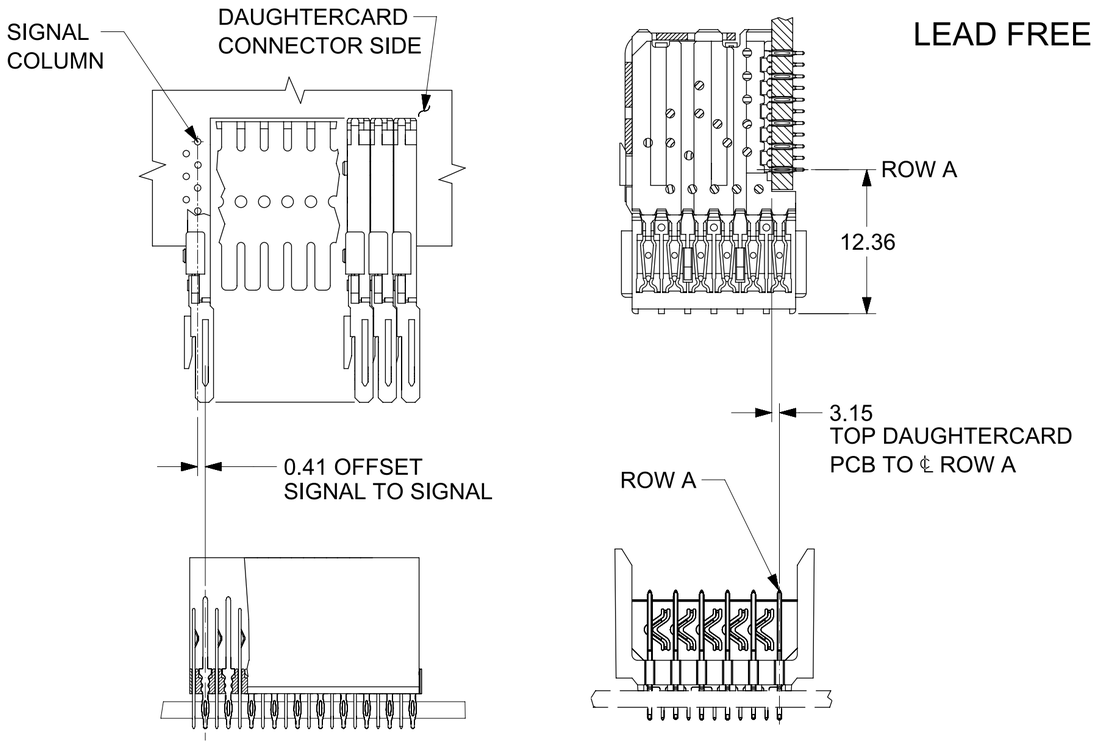

LEAD FREE CHART

74057 - * * 0 *

NUMBER OF COLUMNS/PLATING
- 10 = 10 COLUMN MATTE TIN (FORMERLY TIN/LEAD)
- 15 = 15 COLUMN MATTE TIN (FORMERLY TIN/LEAD)
- 25 = 25 COLUMN MATTE TIN (FORMERLY TIN/LEAD)
- 60 = 10 COLUMN MATTE TIN (MAPS)
- 65 = 15 COLUMN MATTE TIN (MAPS)
- 70 = 25 COLUMN MATTE TIN (MAPS)
- 90 = 10 COLUMN MATTE TIN
- 95 = 15 COLUMN MATTE TIN
- 85 = 25 COLUMN MATTE TIN

PIN HEIGHT
- 1 & 6 = 4.75
- 2 & 7 = 6.25
- 3 & 8 = 4.25
- 4 & 9 = 5.15

THIS DRAWING CONTAINS INFORMATION THAT IS PROPRIETARY TO MOLEX ELECTRONIC TECHNOLOGIES, LLC AND SHOULD NOT BE USED WITHOUT WRITTEN PERMISSION

DIMENSION UNITS	MM
SCALE	2.5:1
GENERAL TOLERANCES (UNLESS SPECIFIED)	MM / INCH
4 PLACES	± / ±
3 PLACES	± / ±
2 PLACES	± 0.250 / ±
1 PLACE	± 0.38 / ±
0 PLACES	± / ±
ANGULAR TOL	± 0.5°
DRAFT WHERE APPLICABLE MUST REMAIN WITHIN DIMENSIONS	

CURRENT REV DESC: REMOVED OBSOLETED PART NUMBERS AS PER PCN#515988

STATUS: Production

DRWN:	Sampreet S Mirajkar	2025-11-14
CHK'D:	Ganesh Rao B	2025-12-01
APPR:	Gurunandan GA	2025-12-01

INITIAL REVISION:

DRWN:	MWANG	1998/11/09
APPR:	SMILLER	2012/05/23

molex

VHDM 6 ROW
OPEN END BACKPLANE SALES ASSEMBLY

PRODUCT CUSTOMER DRAWING

DOCUMENT NUMBER	DOC TYPE	DOC PART	REVISION
SD-74057-002	PSD	001	N5

THIRD ANGLE PROJECTION	DRAWING	SERIES	MATERIAL NUMBER	CUSTOMER	SHEET NUMBER
	C-SIZE	74057	SEE TABLE	GENERAL MARKET	2 OF 3

FORMAT: EngAngle-TC4b-prodC
REVISION: B
DATE: 2023/10/23

DATE	REV	DESCRIPTION
2022/06/22	N3	DRAWING MIGRATED TO NEW SHEET FORMAT REMOVED OBSOLETED PART NUMBER AS PER PCN#509989
2022/07/14	N4	DRAWING MIGRATION AS MODEL IN THE DRAWING VIEW IS UPDATED
2025/11/14	N5	REMOVED OBSOLETED PART NUMBER: 74057-9001

THIS DRAWING CONTAINS INFORMATION THAT IS PROPRIETARY TO MOLEX ELECTRONIC TECHNOLOGIES, LLC AND SHOULD NOT BE USED WITHOUT WRITTEN PERMISSION

DIMENSION UNITS	SCALE
MM	1:1

GENERAL TOLERANCES (UNLESS SPECIFIED)

	MM	INCH
4 PLACES	±	±
3 PLACES	±	±
2 PLACES	± 0.250	±
1 PLACE	± 0.38	±
0 PLACES	±	±
ANGULAR TOL	± 0.5°	

DRAFT WHERE APPLICABLE MUST REMAIN WITHIN DIMENSIONS

CURRENT REV DESC: REMOVED OBSOLETED PART NUMBERS AS PER PCN#515988

STATUS: Production

DRWN:	Sampreet S Mirajkar	2025-11-14
CHK'D:	Ganesh Rao B	2025-12-01
APPR:	Gurunandan GA	2025-12-01

INITIAL REVISION:

DRWN:	MWANG	1998/11/09
APPR:	SMILLER	2012/05/23

THIRD ANGLE PROJECTION

DRAWING	SERIES
C-SIZE	74057

molex

VHDM 6 ROW
OPEN END BACKPLANE SALES ASSEMBLY

PRODUCT CUSTOMER DRAWING

DOCUMENT NUMBER	DOC TYPE	DOC PART	REVISION
SD-74057-002	PSD	001	N5

MATERIAL NUMBER	CUSTOMER	SHEET NUMBER
SEE TABLE	GENERAL MARKET	3 OF 3

FORMAT: EngMgr-TC4b+prod-C
REVISION: B
DATE: 2023/10/23