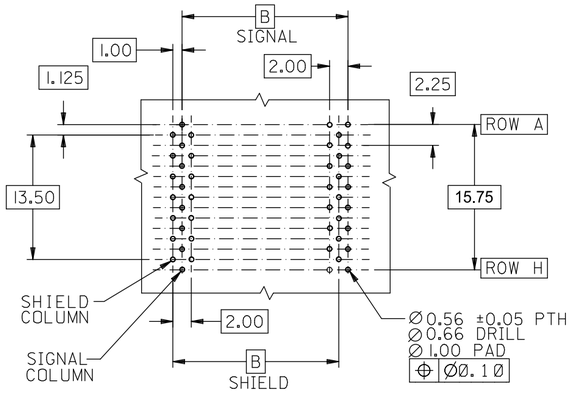

BACKPLANE HOLE PATTERN
RECOMMENDED DIMENSION

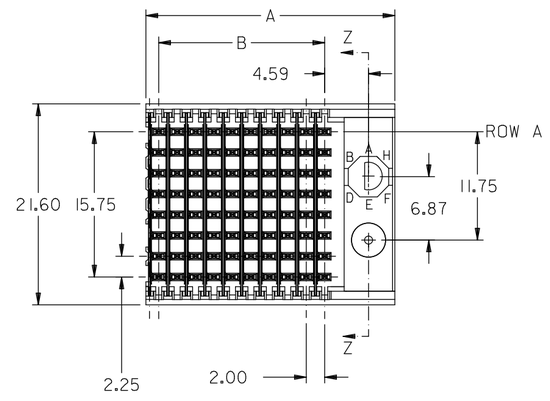

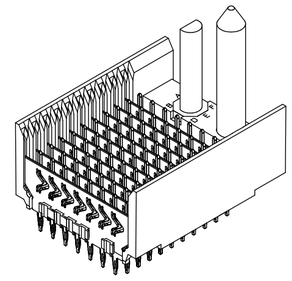

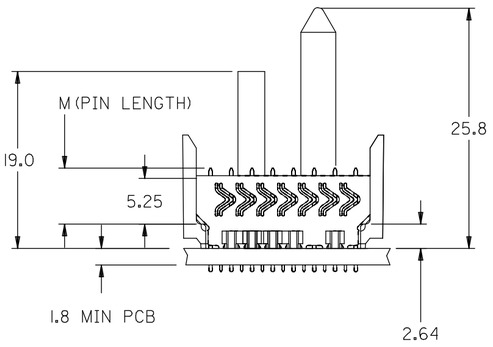

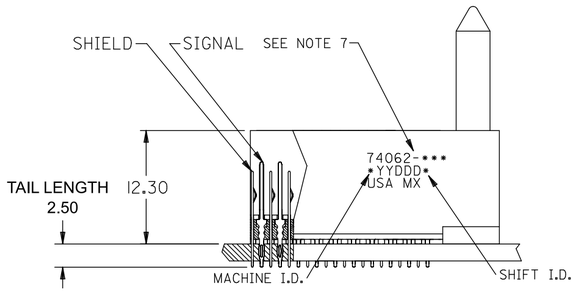

NOTES:
1. MATERIALS:
   HOUSING - LIQUID CRYSTAL POLYMER (LCP),
   GLASS-FILLED, UL 94V-0, COLOR: BLACK
   SIGNAL PIN & SHIELD - COPPER ALLOY
2. FINISHES:
   CONTACT AREA: SELECTIVE GOLD (Au)
   PCB TAILS: SELECTIVE MATTE TIN (Sn)
   NICKEL (Ni) OVERALL.
3. THIS PART CONFORMS TO MOLEX PRODUCT SPECIFICATION PS-74031-999
4. FOR MIXED CONTACT LENGTHS CONSULT MOLEX FOR AVAILABILITY
5. FOR SPECIFIC MATERIAL NUMBERS & MATING INFORMATION REFER TO SHEET 2
6. PACKAGE PER PK-74061-003
7. MARK PART WITH PART NUMBER & DATE CODE APPROXIMATELY WHERE SHOWN
8. MAPS (MOLEX ADVANCED PLATING SYSTEM).

THE PRIMARY CARTON WITH A LABEL STATING "ELV AND RoHS COMPLAINT" IS LEAD FREE. CARTONS WITHOUT THIS LABEL MAY CONTAIN LEAD.

THIS DRAWING CONTAINS INFORMATION THAT IS PROPRIETARY TO MOLEX ELECTRONIC TECHNOLOGIES, LLC AND SHOULD NOT BE USED WITHOUT WRITTEN PERMISSION

DIMENSION UNITS	SCALE
MM	2.5:1

GENERAL TOLERANCES (UNLESS SPECIFIED)

	MM	INCH
4 PLACES	±	±
3 PLACES	±	±
2 PLACES	±	±
1 PLACE	±	±
0 PLACES	±	±
ANGULAR TOL	± 0.5°	

DRAFT WHERE APPLICABLE MUST REMAIN WITHIN DIMENSIONS

CURRENT REV DESC: REMOVED OBSOLETED PART NUMBERS AS PER PCN#516673

STATUS: Production
DRWN: Sampreet S Mirajkar 2026-03-03
CHK'D: Ganesh Rao B 2026-03-18
APPR: Gurunandan GA 2026-03-20

INITIAL REVISION:
DRWN: MWANG 1998/11/12
APPR: CBIXLER 1998/11/12

THIRD ANGLE PROJECTION

DRAWING	SERIES
C-SIZE	74062

molex

VHDM 8 ROW
SHIELD END BACKPLANE
SALES ASSEMBLY

PRODUCT CUSTOMER DRAWING

DOCUMENT NUMBER	DOC TYPE	DOC PART	REVISION
SD-74062-002	PSD	001	P1

MATERIAL NUMBER	CUSTOMER	SHEET NUMBER
SEE SHEET 2	GENERAL MARKET	1 OF 2

FORMAT: Engdega-TC-tb-prod-C
REVISION: B
DATE: 2023/10/23

M/N 74062-( )	-**0*	-**1*	-**2*	-**3*	-**4*	-**5*	-**6*	-**7*	-**8*	-**9*
KEYING PIN ORIENTATION	0	A	B	C	D	E	F	G	H	9

NO GUIDE PIN
NO KEYING PIN

74062 - * * * - *

NUMBER OF COLUMNS/PLATING
10 = 10 COLUMN MATTE TIN (FORMERLY TIN/LEAD)
25 = 25 COLUMN MATTE TIN (FORMERLY TIN/LEAD)
60 = 10 COLUMN MATTE TIN (MAPS)
75 = 25 COLUMN MATTE TIN (MAPS)
90 = 10 COLUMN MATTE TIN
85 = 25 COLUMN MATTE TIN

PIN HEIGHT
1 & 6 = 4.75
2 & 7 = 6.25
3 & 8 = 4.25
4 & 9 = 5.15

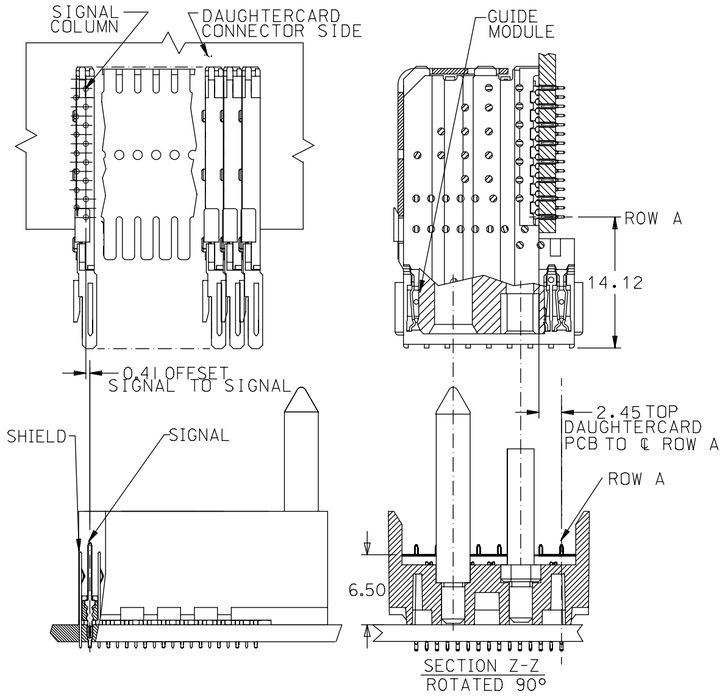

PART NUMBER	COLUMN	NUMBER OF SIGNAL PIN	NUMBER OF SHIELD	A	B	M	GOLD THICKNESS MICROMETER	TIN THICKNESS MICROMETER
74062-60*1	10	80	10	27.00	18.00	4.75	0.25 MAPS	0.76-1.52
74062-75*1	25	200	25	57.00	48.00		0.25 MAPS	
74062-*5*1							0.76	
74062-*5*6							1.27	
74062-60*2	10	80	10	27.00	18.00	6.25	0.25 MAPS	
74062-*0*2							0.76	
74062-*0*7							1.27	
74062-75*2	25	200	25	57.00	48.00		0.25 MAPS	
74062-*5*2							0.76	
74062-*5*7							1.27	
74062-60*3	10	80	10	27.00	18.00	4.25	0.25 MAPS	
74062-*0*8							1.27	
74062-75*3	25	200	25	57.00	48.00		0.25 MAPS	
74062-*5*8							1.27	
74062-60*4	10	80	10	27.00	18.00	5.15	0.25 MAPS	
74062-*0*4							0.76	
74062-75*4	25	200	25	57.00	48.00		0.25 MAPS	
74062-*5*4							0.76	

THIS DRAWING CONTAINS INFORMATION THAT IS PROPRIETARY TO MOLEX ELECTRONIC TECHNOLOGIES, LLC AND SHOULD NOT BE USED WITHOUT WRITTEN PERMISSION

DIMENSION UNITS: MM
SCALE: 2.5:1

GENERAL TOLERANCES (UNLESS SPECIFIED)

	MM	INCH
4 PLACES	±	±
3 PLACES	±	±
2 PLACES	±	±
1 PLACE	±	±
0 PLACES	±	±
ANGULAR TOL	± 0.5°	

DRAFT WHERE APPLICABLE MUST REMAIN WITHIN DIMENSIONS

CURRENT REV DESC: REMOVED OBSOLETED PART NUMBERS AS PER PCN#516673

STATUS: Production
DRWN: Sampreet S Mirajkar 2026-03-03
CHK'D: Ganesh Rao B 2026-03-18
APPR: Gurunandan GA 2026-03-20

INITIAL REVISION:
DRWN: MWANG 1998/11/12
APPR: CBIXLER 1998/11/12

THIRD ANGLE PROJECTION | DRAWING: C-SIZE | SERIES: 74062

molex

VHDM 8 ROW
SHIELD END BACKPLANE
SALES ASSEMBLY

PRODUCT CUSTOMER DRAWING

DOCUMENT NUMBER	DOC TYPE	DOC PART	REVISION
SD-74062-002	PSD	001	P1

MATERIAL NUMBER	CUSTOMER	SHEET NUMBER
SEE SHEET 2	GENERAL MARKET	2 OF 2

FORMAT: EngMega-TC4b-prod-C
REVISION: B
DATE: 2023/10/23