VERSION A (1.68/.066 END CIRCUITS TO INSIDE END WALLS)

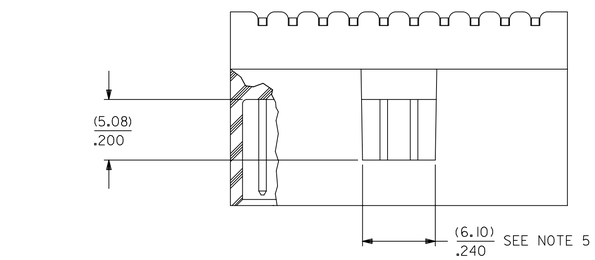

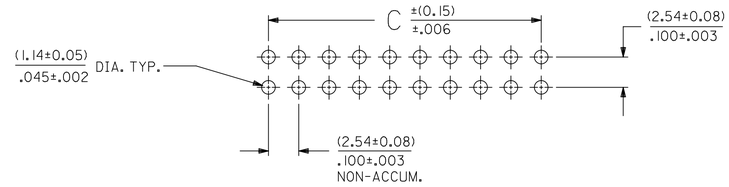

RECOMMENDED P.C. BOARD HOLE LAYOUT

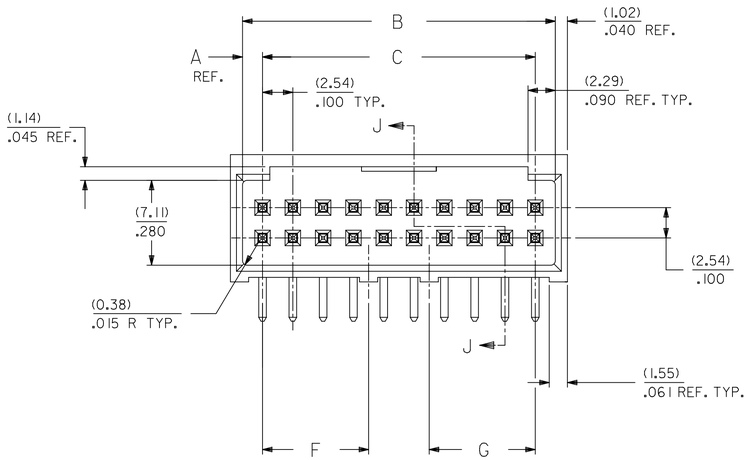

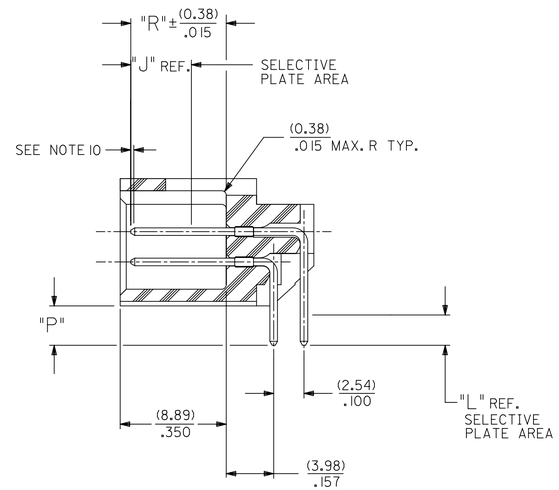

SECTION J-J

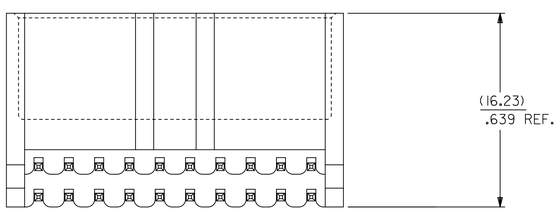

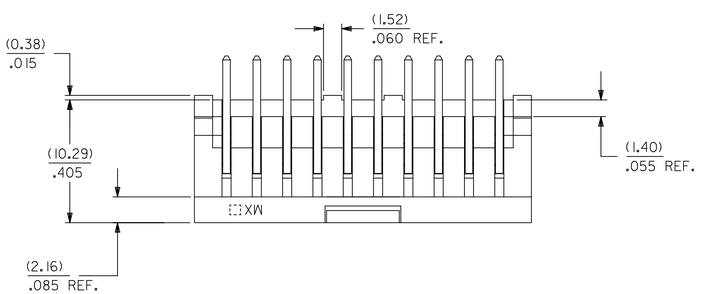

NOTES
1. MATERIAL: SHROUDED WAFER: GLASS FILLED, LIQUID CRYSTAL POLYMER,
COLOR: BLACK; UL94V-0
PINS: COPPER ALLOY
2. FINISH:
TIN - 3.81 MICROMETERS/150 MICROINCHES MINIMUM TIN PLATE
OVER NICKEL UNDERPLATE OVERALL
15 GOLD - 0.38 MICROMETERS/15 MICROINCHES MINIMUM GOLD PLATE IN SELECT AREA
1.91 MICROMETERS/75 MICROINCHES MINIMUM TIN PLATE IN SELECT AREA
OVER NICKEL UNDERPLATE OVERALL

30 GOLD - 0.76 MICROMETERS/30 MICROINCHES MINIMUM GOLD PLATE IN SELECT AREA
1.91 MICROMETERS/75 MICROINCHES MINIMUM TIN PLATE IN SELECT AREA
OVER NICKEL UNDERPLATE OVERALL
3. PRODUCT SPECIFICATION: PS-74162-0001
4. PACKAGING INFORMATION: SEE CHARTS
5. WINDOW NOT AVAILABLE ON 6 CKT.
6. FOR CHARTED DIMENSIONS AND ASSEMBLY NO.S NOT SHOWN ON THIS SHEET - SEE SHEET 2.
7. 20 CIRCUIT SIZE SHOWN FOR ILLUSTRATION PURPOSES.
8. PIN PUSHOUT FORCE: (17.79 N)/4 LBS.
9. PINS MUST MEET SOLDERABLILITY SPEC. MIL-STD-202 METHOD 208B.
10. ROW TO ROW PIN HEIGHT VARIATION MUST NOT EXCEED (0.25)/.010 IN.
11. THIS PART CONFORMS TO CLASS B REQUIREMENTS OF COSMETIC SPECIFICATION PS-45499-002.

CKT.	DIM. "A"	DIM. "B"	DIM. "C"	DIM. "F"	DIM. "G"			
06	(1.68) .066	(8.43) .332	(5.08) .200	———	———	———		
08	(1.68) .066	(10.97) .432	(7.62) .300	———	———	———		
10	(1.68) .066	(13.51) .532	(10.16) .400	———	———	———		
12	(1.68) .066	(16.05) .632	(12.70) .500	———	———	———		
14	(1.68) .066	(18.59) .732	(15.24) .600	———	———	———		
16	(1.68) .066	(21.13) .832	(17.78) .700	———	———	———		
18	(1.68) .066	(23.67) .932	(20.32) .800	———	———	———		
20	(1.68) .066	(26.21) 1.032	(22.86) .900	———	———	———		
22	(1.68) .066	(28.75) 1.132	(25.40) 1.000	———	———	———		
24	(1.68) .066	(31.29) 1.232	(27.94) 1.100	(16.64) .655	———	———		
26	(1.68) .066	(33.83) 1.332	(30.48) 1.200	(16.64) .655	———	———		
28	(1.68) .066	(36.37) 1.432	(33.02) 1.300	(16.64) .655	———	———		
30	(1.68) .066	(38.91) 1.532	(35.56) 1.400	(16.64) .655	———	———		
32	(1.68) .066	(41.45) 1.632	(38.10) 1.500	(16.64) .655	———	———		
34	(1.68) .066	(43.99) 1.732	(40.64) 1.600	(16.64) .655	(16.76) .660	———		
36	(1.68) .066	(46.53) 1.832	(43.18) 1.700	(16.64) .655	(16.76) .660	———		
38	(1.68) .066	(49.07) 1.932	(45.72) 1.800	(16.64) .655	(16.76) .660	———		
40	(1.68) .066	(51.61) 2.032	(48.26) 1.900	(16.64) .655	(16.76) .660	———		
42	(1.68) .066	(54.15) 2.132	(50.80) 2.000	(16.64) .655	(16.76) .660	———		
44	(1.68) .066	(56.69) 2.232	(53.34) 2.100	(19.05) .750	(16.76) .660	———		
46	(1.68) .066	(59.23) 2.332	(55.88) 2.200	(19.05) .750	(16.76) .660	———		
48	(1.68) .066	(61.77) 2.432	(58.42) 2.300	(19.05) .750	(16.76) .660	———		
50	(1.68) .066	(64.31) 2.532	(60.96) 2.400	(19.05) .750	(16.76) .660	———		
52	(1.68) .066	(66.85) 2.632	(63.50) 2.500	(19.05) .750	(16.76) .660	———		
54	(1.68) .066	(69.39) 2.732	(66.04) 2.600	(21.59) .850	(21.84) .860	———		
56	(1.68) .066	(71.93) 2.832	(68.58) 2.700	(21.59) .850	(21.84) .860	———		
58	(1.68) .066	(74.47) 2.932	(71.12) 2.800	(27.81) 1.095	(26.92) 1.060	———		
60	(1.68) .066	(77.01) 3.032	(73.66) 2.900	(27.81) 1.095	(26.92) 1.060	———		
62	(1.68) .066	(79.55) 3.132	(76.20) 3.000	(27.81) 1.095	(26.92) 1.060	———		
64	(1.68) .066	(82.09) 3.232	(78.74) 3.100	(27.81) 1.095	(26.92) 1.060	———		
66	(1.68) .066	(84.63) 3.332	(81.28) 3.200	(27.81) 1.095	(26.92) 1.060	———		
68	(1.68) .066	(87.17) 3.432	(83.82) 3.300	(27.81) 1.095	(26.92) 1.060	———		
70	(1.68) .066	(89.71) 3.532	(86.36) 3.400	(27.81) 1.095	(26.92) 1.060	———		
72	(1.68) .066	(92.25) 3.632	(88.90) 3.500	(27.81) 1.095	(26.92) 1.060	———		

THIS DRAWING CONTAINS INFORMATION THAT IS PROPRIETARY TO MOLEX ELECTRONIC TECHNOLOGIES, LLC AND SHOULD NOT BE USED WITHOUT WRITTEN PERMISSION

DIMENSION UNITS	SCALE
MM/IN	4:1

GENERAL TOLERANCES (UNLESS SPECIFIED)

	MM	INCH
4 PLACES	±	±
3 PLACES	±	± 0.01
2 PLACES	± 0.25	± 0.014
1 PLACE	± 0.36	±
0 PLACES	±	±
ANGULAR TOL	± 0.5 °	

DRAFT WHERE APPLICABLE MUST REMAIN WITHIN DIMENSIONS

CURRENT REV DESC: REMOVED OBSOLETED PART NUMBERS AS PER PCN#515931

EC NO: 812933
DRWN: MADHAM5 2025/02/12
CHK'D: GGA 2025/03/03
APPR: GGA 2025/03/03

INITIAL REVISION:
DRWN: SMILLER 2009/03/27
APPR: SMILLER 2009/03/27

molex

SALES ASSEMBLY
WAFER-RIGHT ANGLE FULLY SHROUNDED
.100 GRID

PRODUCT CUSTOMER DRAWING

DOCUMENT NUMBER	DOC TYPE	DOC PART	REVISION
SD-74162-001	PSD	001	C1

THIRD ANGLE PROJECTION	DRAWING	SERIES	MATERIAL NUMBER	CUSTOMER	SHEET NUMBER
	D-SIZE	74162	SEE TABLE	GENERAL MARKET	1 OF 8

DOCUMENT STATUS	P1	RELEASE DATE	2025/03/03 16:52:26

VERSION A (1.68/.066 END CIRCUITS TO INSIDE END WALLS)

ITEM NUMBER 74162	P REF	PLATING FINISH	CONNECTOR END PLATING				PC BOARD END PLATING			INFORMATION PK-70873
			TYPE	J LENGTH		R ± 0.38 / .015	TYPE	L LENGTH		
-0006-0072	3.30 / .130	TIN	TIN	———		8.00 / .315	TIN	———		0019
-0106-0172	5.08 / .200	TIN	TIN	———		8.00 / .315	TIN	———		0019
-0206-0272	3.30 / .130	15 GOLD	GOLD	5.08 / .200		8.00 / .315	TIN	2.54 / .100		0019
-0306-0372	5.08 / .200	15 GOLD	GOLD	5.08 / .200		8.00 / .315	TIN	2.54 / .100		0019
-0406-0472	3.30 / .130	30 GOLD	GOLD	5.08 / .200		8.00 / .315	TIN	2.54 / .100		0019
-0506-0572	5.08 / .200	30 GOLD	GOLD	5.08 / .200		8.00 / .315	TIN	2.54 / .100		0019
-0606-0672	3.30 / .130	TIN	TIN	———		6.35 / .250	TIN	———		0019

NO. OF CKTS	ITEM NUMBER	ITEM NUMBER	ITEM NUMBER	ITEM NUMBER	ITEM NUMBER	ITEM NUMBER	ITEM NUMBER
6	74162-0006	74162-0106	74162-0206	74162-0306	74162-0406	74162-0506	74162-0606
8	74162-0008	74162-0108	74162-0208	74162-0308	74162-0408	74162-0508	74162-0608
10	74162-0010	74162-0110	74162-0210	74162-0310	74162-0410	74162-0510	74162-0610
12	74162-0012	74162-0112	74162-0212	74162-0312	74162-0412	74162-0512	74162-0612
14	74162-0014	74162-0114	74162-0214	74162-0314	74162-0414	74162-0514	74162-0614
16	74162-0016	74162-0116	74162-0216	74162-0316	74162-0416	74162-0516	74162-0616
18	74162-0018	74162-0118	74162-0218	74162-0318	74162-0418	74162-0518	74162-0618
20	74162-0020	74162-0120	74162-0220	74162-0320	74162-0420	74162-0520	74162-0620
22	74162-0022	74162-0122	74162-0222	74162-0322	74162-0422	74162-0522	74162-0622
24	74162-0024	74162-0124	74162-0224	74162-0324	74162-0424	74162-0524	74162-0624
26	74162-0026	74162-0126	74162-0226	74162-0326	74162-0426	74162-0526	74162-0626
28	74162-0028	74162-0128	74162-0228	74162-0328	74162-0428	74162-0528	74162-0628
30	74162-0030	74162-0130	74162-0230	74162-0330	74162-0430	74162-0530	74162-0630
32	74162-0032	74162-0132	74162-0232	74162-0332	74162-0432	74162-0532	74162-0632
34	74162-0034	74162-0134	74162-0234	74162-0334	74162-0434	74162-0534	74162-0634
36	74162-0036	74162-0136	74162-0236	74162-0336	74162-0436	74162-0536	74162-0636
38	74162-0038	74162-0138	74162-0238	74162-0338	74162-0438	74162-0538	74162-0638
40	74162-0040	74162-0140	74162-0240	74162-0340	74162-0440	74162-0540	74162-0640
42	74162-0042	74162-0142	74162-0242	74162-0342	74162-0442	74162-0542	74162-0642
44	74162-0044	74162-0144	74162-0244	74162-0344	74162-0444	74162-0544	74162-0644
46	74162-0046	74162-0146	74162-0246	74162-0346	74162-0446	74162-0546	74162-0646
48	74162-0048	74162-0148	74162-0248	74162-0348	74162-0448	74162-0548	74162-0648
50	74162-0050	74162-0150	74162-0250	74162-0350	74162-0450	74162-0550	74162-0650
52	74162-0052	74162-0152	74162-0252	74162-0352	74162-0452	74162-0552	74162-0652
54	74162-0054	74162-0154	74162-0254	74162-0354	74162-0454	74162-0554	74162-0654
56	74162-0056	74162-0156	74162-0256	74162-0356	74162-0456	74162-0556	74162-0656
58	74162-0058	74162-0158	74162-0258	74162-0358	74162-0458	74162-0558	74162-0658
60	74162-0060	74162-0160	74162-0260	74162-0360	74162-0460	74162-0560	74162-0660
62	74162-0062	74162-0162	74162-0262	74162-0362	74162-0462	74162-0562	74162-0662
64	74162-0064	74162-0164	74162-0264	74162-0364	74162-0464	74162-0564	74162-0664
66	74162-0066	74162-0166	74162-0266	74162-0366	74162-0466	74162-0566	74162-0666
68	74162-0068	74162-0168	74162-0268	74162-0368	74162-0468	74162-0568	74162-0668
70	74162-0070	74162-0170	74162-0270	74162-0370	74162-0470	74162-0570	74162-0670
72	74162-0072	74162-0172	74162-0272	74162-0372	74162-0472	74162-0572	74162-0672

THIS DRAWING CONTAINS INFORMATION THAT IS PROPRIETARY TO MOLEX ELECTRONIC TECHNOLOGIES, LLC AND SHOULD NOT BE USED WITHOUT WRITTEN PERMISSION

DIMENSION UNITS	SCALE
MM/IN	1:1

GENERAL TOLERANCES (UNLESS SPECIFIED)

	MM	INCH
4 PLACES	±	±
3 PLACES	±	± 0.01
2 PLACES	± 0.25	± 0.014
1 PLACE	± 0.36	±
0 PLACES	±	±
ANGULAR TOL	± 0.5 °	

DRAFT WHERE APPLICABLE MUST REMAIN WITHIN DIMENSIONS

CURRENT REV DESC: REMOVED OBSOLETED PART NUMBERS AS PER PCN#515931

EC NO: 812933
DRWN: MADHAM5 2025/02/12
CHK'D: GGA 2025/03/03
APPR: GGA 2025/03/03

INITIAL REVISION:
DRWN: SMILLER 2009/03/27
APPR: SMILLER 2009/03/27

molex

SALES ASSEMBLY
WAFER-RIGHT ANGLE FULLY SHROUNDED
.100 GRID

PRODUCT CUSTOMER DRAWING

DOCUMENT NUMBER	DOC TYPE	DOC PART	REVISION
SD-74162-001	PSD	001	C1

THIRD ANGLE PROJECTION	DRAWING	SERIES	MATERIAL NUMBER	CUSTOMER	SHEET NUMBER
	D-SIZE	74162	SEE TABLE	GENERAL MARKET	2 OF 8

DOCUMENT STATUS	P1	RELEASE DATE	2025/03/03 16:52:26

NUMBER: 515-74162-0001-0-0
REVISION: E1
DATE: 2021/03/01

VERSION B (3.81/.150 END CIRCUITS TO INSIDE END WALLS)

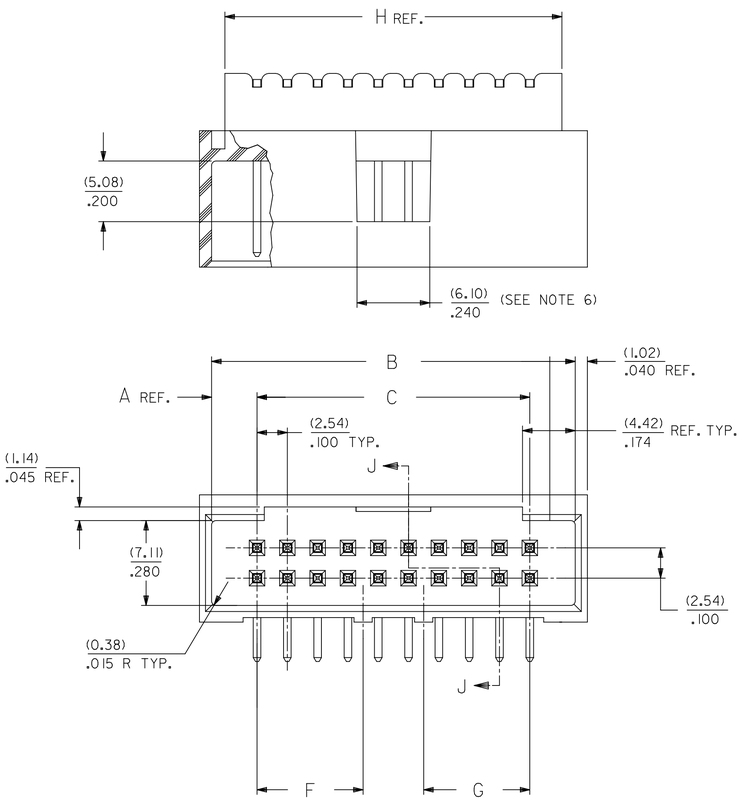

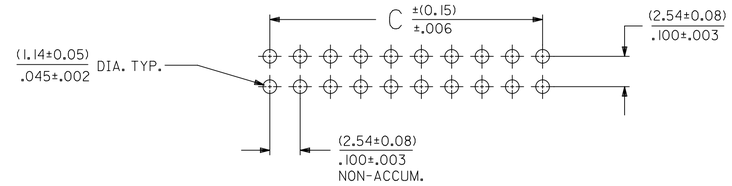

RECOMMENDED P.C. BOARD HOLE LAYOUT

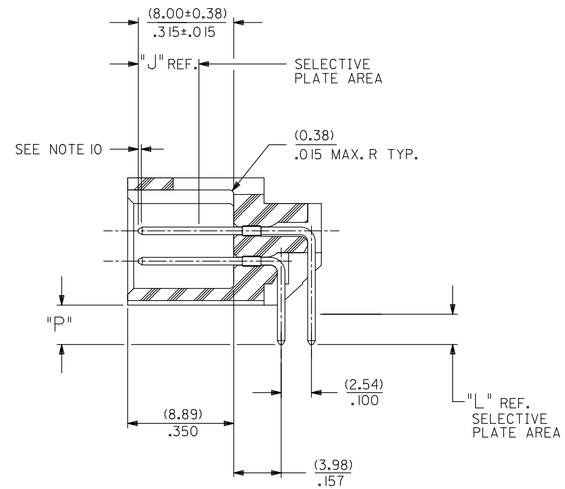

SECTION J-J

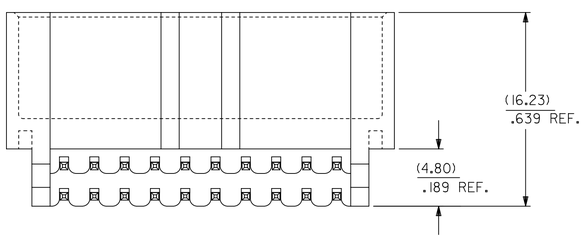

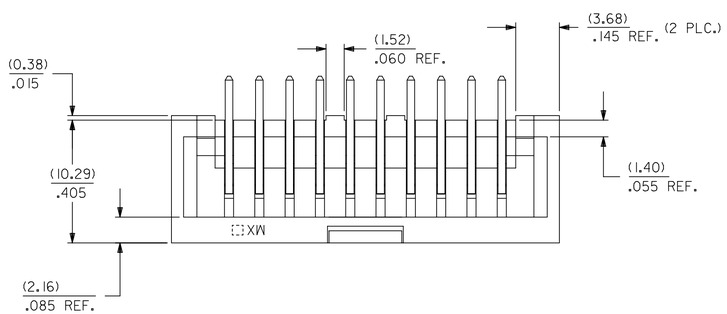

NOTES
1. MATERIAL: SHROUDED WAFER: GLASS FILLED, LIQUID CRYSTAL POLYMER,
COLOR: BLACK; UL94V-0
PINS: COPPER ALLOY
2. FINISH:
TIN - 3.81 MICROMETERS/150 MICROINCHES MINIMUM TIN PLATE
OVER NICKEL UNDERPLATE OVERALL
15 GOLD - 0.38 MICROMETERS/15 MICROINCHES MINIMUM GOLD PLATE IN SELECT AREA
1.91 MICROMETERS/75 MICROINCHES MINIMUM TIN PLATE IN SELECT AREA
OVER NICKEL UNDERPLATE OVERALL

30 GOLD - 0.76 MICROMETERS/30 MICROINCHES MINIMUM GOLD PLATE IN SELECT AREA
1.91 MICROMETERS/75 MICROINCHES MINIMUM TIN PLATE IN SELECT AREA
OVER NICKEL UNDERPLATE OVERALL
3. PRODUCT SPECIFICATION: PS-74162-0001
4. PACKAGING INFORMATION: SEE CHARTS
5. FOR CHARTED DIMENSIONS AND ASSEMBLY NO.S NOT SHOWN ON THIS SHEET - SEE SHEET 4.
6. WINDOW NOT AVAILABLE ON 6 CKT.
7. 20 CIRCUIT SIZE SHOWN FOR ILLUSTRATION PURPOSES.
8. PIN PUSHOUT FORCE: (17.79 N)/4 LBS.
9. PINS MUST MEET SOLDERABLILITY SPEC. MIL-STD-202 METHOD 208B.
10. ROW TO ROW PIN HEIGHT VARIATION MUST NOT EXCEED (0.25)/.010 IN.
11. THIS PART CONFORMS TO CLASS B REQUIREMENTS OF COSMETIC SPECIFICATION PS-45499-002.

CKT.	DIM. "A"	DIM. "B"	DIM. "C"	DIM. "F"	DIM. "G"	DIM. "H"		
06	(3.81) .150	(12.70) .500	(5.08) .200	———	———	(10.46) .412		
08	(3.81) .150	(15.24) .600	(7.62) .300	———	———	(13.00) .512		
10	(3.81) .150	(17.78) .700	(10.16) .400	———	———	(15.54) .612		
12	(3.81) .150	(20.32) .800	(12.70) .500	———	———	(18.08) .712		
14	(3.81) .150	(22.86) .900	(15.24) .600	———	———	(20.62) .812		
16	(3.81) .150	(25.40) 1.000	(17.78) .700	———	———	(23.16) .912		
18	(3.81) .150	(27.94) 1.100	(20.32) .800	———	———	(25.70) 1.012		
20	(3.81) .150	(30.48) 1.200	(22.86) .900	———	———	(28.24) 1.112		
22	(3.81) .150	(33.02) 1.300	(25.40) 1.000	———	———	(30.78) 1.212		
24	(3.81) .150	(35.56) 1.400	(27.94) 1.100	(16.64) .655	———	(33.32) 1.312		
26	(3.81) .150	(38.10) 1.500	(30.48) 1.200	(16.64) .655	———	(35.86) 1.412		
28	(3.81) .150	(40.64) 1.600	(33.02) 1.300	(16.64) .655	———	(38.40) 1.512		
30	(3.81) .150	(43.18) 1.700	(35.56) 1.400	(16.64) .655	———	(40.94) 1.612		
32	(3.81) .150	(45.72) 1.800	(38.10) 1.500	(16.64) .655	———	(43.48) 1.712		
34	(3.81) .150	(48.26) 1.900	(40.64) 1.600	(16.64) .655	(16.76) .660	(46.02) 1.812		
36	(3.81) .150	(50.80) 2.000	(43.18) 1.700	(16.64) .655	(16.76) .660	(48.56) 1.912		
38	(3.81) .150	(53.34) 2.100	(45.72) 1.800	(16.64) .655	(16.76) .660	(51.10) 2.012		
40	(3.81) .150	(55.88) 2.200	(48.26) 1.900	(16.64) .655	(16.76) .660	(53.64) 2.112		
42	(3.81) .150	(58.42) 2.300	(50.80) 2.000	(16.64) .655	(16.76) .660	(56.18) 2.212		
44	(3.81) .150	(60.96) 2.400	(53.34) 2.100	(19.05) .750	(16.76) .660	(58.72) 2.312		
46	(3.81) .150	(63.50) 2.500	(55.88) 2.200	(19.05) .750	(16.76) .660	(61.26) 2.412		
48	(3.81) .150	(66.04) 2.600	(58.42) 2.300	(19.05) .750	(16.76) .660	(63.80) 2.512		
50	(3.81) .150	(68.58) 2.700	(60.96) 2.400	(19.05) .750	(16.76) .660	(66.34) 2.612		
52	(3.81) .150	(71.12) 2.800	(63.50) 2.500	(19.05) .750	(16.76) .660	(68.88) 2.712		
54	(3.81) .150	(73.66) 2.900	(66.04) 2.600	(21.59) .850	(21.84) .860	(71.42) 2.812		
56	(3.81) .150	(76.20) 3.000	(68.58) 2.700	(21.59) .850	(21.84) .860	(73.96) 2.912		
58	(3.81) .150	(78.74) 3.100	(71.12) 2.800	(27.81) 1.095	(26.92) 1.060	(76.50) 3.012		
60	(3.81) .150	(81.28) 3.200	(73.66) 2.900	(27.81) 1.095	(26.92) 1.060	(79.04) 3.112		
62	(3.81) .150	(83.82) 3.300	(76.20) 3.000	(27.81) 1.095	(26.92) 1.060	(81.58) 3.212		
64	(3.81) .150	(86.36) 3.400	(78.74) 3.100	(27.81) 1.095	(26.92) 1.060	(84.12) 3.312		
66	(3.81) .150	(88.90) 3.500	(81.28) 3.200	(27.81) 1.095	(26.92) 1.060	(86.66) 3.412		
68	(3.81) .150	(91.44) 3.600	(83.82) 3.300	(27.81) 1.095	(26.92) 1.060	(89.20) 3.512		
70	(3.81) .150	(93.98) 3.700	(86.36) 3.400	(27.81) 1.095	(26.92) 1.060	(91.74) 3.612		
72	(3.81) .150	(96.52) 3.800	(88.90) 3.500	(27.81) 1.095	(26.92) 1.060	(94.28) 3.712		

THIS DRAWING CONTAINS INFORMATION THAT IS PROPRIETARY TO MOLEX ELECTRONIC TECHNOLOGIES, LLC AND SHOULD NOT BE USED WITHOUT WRITTEN PERMISSION

DIMENSION UNITS	SCALE
MM/IN	4:1

GENERAL TOLERANCES (UNLESS SPECIFIED)

	MM	INCH
4 PLACES	±	±
3 PLACES	±	± 0.01
2 PLACES	± 0.25	± 0.014
1 PLACE	± 0.36	±
0 PLACES	±	±
ANGULAR TOL	± 0.5 °	

DRAFT WHERE APPLICABLE MUST REMAIN WITHIN DIMENSIONS

CURRENT REV DESC: REMOVED OBSOLETED PART NUMBERS AS PER PCN#515931

EC NO: 812933
DRWN: MADHAM5 2025/02/12
CHK'D: GGA 2025/03/03
APPR: GGA 2025/03/03

INITIAL REVISION:
DRWN: SMILLER 2009/03/27
APPR: SMILLER 2009/03/27

molex

SALES ASSEMBLY
WAFER-RIGHT ANGLE FULLY SHROUDED
.100 GRID

PRODUCT CUSTOMER DRAWING

DOCUMENT NUMBER	DOC TYPE	DOC PART	REVISION
SD-74162-001	PSD	001	C1

THIRD ANGLE PROJECTION	DRAWING	SERIES	MATERIAL NUMBER	CUSTOMER	SHEET NUMBER
	D-SIZE	74162	SEE TABLE	GENERAL MARKET	3 OF 8

DOCUMENT STATUS	P1	RELEASE DATE	2025/03/03 16:52:26

TEMPLATE: Eng-Page-Master-Sp-prod-D
VERSION: 1.0
DATE: 2021/05/01

VERISION B (3.81/.150 END CIRCUITS TO INSIDE END WALLS)

ITEM NUMBER 74162	P REF	PLATING FINISH	CONNECTOR END PLATING				PC BOARD END PLATING			INFORMATION PK-70873
			TYPE	J LENGTH			TYPE	L LENGTH		
-1006-1072	3.30 / .130	TIN	TIN	———			TIN	———		0019
-1106-1172	5.08 / .200	TIN	TIN	———			TIN	———		0019
-1206-1272	3.30 / .130	15 GOLD	GOLD	5.08 / .200			TIN	2.54 / .100		0019
-1306-1372	5.08 / .200	15 GOLD	GOLD	5.08 / .200			TIN	2.54 / .100		0019
-1406-1472	3.30 / .130	30 GOLD	GOLD	5.08 / .200			TIN	2.54 / .100		0019
-1506-1572	5.08 / .200	30 GOLD	GOLD	5.08 / .200			TIN	2.54 / .100		0019
	———			———				———		

NO. OF CKTS	ITEM NUMBER	ITEM NUMBER	ITEM NUMBER	ITEM NUMBER	ITEM NUMBER	ITEM NUMBER	ITEM NUMBER
6	74162-1006	74162-1106	74162-1206	74162-1306	74162-1406	74162-1506	
8	74162-1008	74162-1108	74162-1208	- - -	74162-1408	74162-1508	
10	74162-1010	74162-1110	74162-1210	74162-1310	74162-1410	74162-1510	
12	74162-1012	74162-1112	74162-1212	74162-1312	74162-1412	74162-1512	
14	74162-1014	74162-1114	74162-1214	74162-1314	74162-1414	74162-1514	
16	74162-1016	74162-1116	74162-1216	74162-1316	74162-1416	74162-1516	
18	74162-1018	74162-1118	74162-1218	74162-1318	74162-1418	74162-1518	
20	74162-1020	74162-1120	74162-1220	74162-1320	74162-1420	74162-1520	
22	74162-1022	74162-1122	74162-1222	74162-1322	74162-1422	74162-1522	
24	74162-1024	74162-1124	74162-1224	74162-1324	74162-1424	74162-1524	
26	74162-1026	74162-1126	74162-1226	74162-1326	74162-1426	74162-1526	
28	74162-1028	74162-1128	74162-1228	74162-1328	74162-1428	74162-1528	
30	74162-1030	74162-1130	74162-1230	74162-1330	74162-1430	74162-1530	
32	74162-1032	74162-1132	74162-1232	74162-1332	- - -	- - -	
34	74162-1034	74162-1134	74162-1234	74162-1334	74162-1434	74162-1534	
36	74162-1036	74162-1136	74162-1236	74162-1336	74162-1436	74162-1536	
38	74162-1038	74162-1138	74162-1238	74162-1338	74162-1438	74162-1538	
40	74162-1040	74162-1140	74162-1240	74162-1340	74162-1440	74162-1540	
42	74162-1042	74162-1142	74162-1242	74162-1342	74162-1442	74162-1542	
44	74162-1044	74162-1144	74162-1244	74162-1344	74162-1444	74162-1544	
46	74162-1046	74162-1146	74162-1246	74162-1346	74162-1446	74162-1546	
48	- - -	74162-1148	74162-1248	74162-1348	74162-1448	74162-1548	
50	74162-1050	74162-1150	74162-1250	74162-1350	74162-1450	74162-1550	
52	74162-1052	74162-1152	74162-1252	74162-1352	74162-1452	74162-1552	
54	74162-1054	74162-1154	74162-1254	74162-1354	74162-1454	74162-1554	
56	74162-1056	74162-1156	74162-1256	74162-1356	74162-1456	74162-1556	
58	74162-1058	74162-1158	74162-1258	74162-1358	74162-1458	74162-1558	
60	74162-1060	74162-1160	74162-1260	74162-1360	74162-1460	74162-1560	
62	74162-1062	74162-1162	74162-1262	74162-1362	74162-1462	74162-1562	
64	74162-1064	74162-1164	74162-1264	74162-1364	74162-1464	74162-1564	
66	74162-1066	74162-1166	74162-1266	74162-1366	74162-1466	74162-1566	
68	74162-1068	74162-1168	74162-1268	74162-1368	74162-1468	74162-1568	
70	74162-1070	74162-1170	74162-1270	74162-1370	74162-1470	74162-1570	
72	74162-1072	74162-1172	74162-1272	74162-1372	74162-1472	74162-1572	

THIS DRAWING CONTAINS INFORMATION THAT IS PROPRIETARY TO MOLEX ELECTRONIC TECHNOLOGIES, LLC AND SHOULD NOT BE USED WITHOUT WRITTEN PERMISSION

DIMENSION UNITS	SCALE
MM/IN	1:1

GENERAL TOLERANCES (UNLESS SPECIFIED)

	MM	INCH
4 PLACES	±	±
3 PLACES	±	± 0.01
2 PLACES	± 0.25	± 0.014
1 PLACE	± 0.36	±
0 PLACES	±	±
ANGULAR TOL	± 0.5 °	

DRAFT WHERE APPLICABLE MUST REMAIN WITHIN DIMENSIONS

CURRENT REV DESC: REMOVED OBSOLETED PART NUMBERS AS PER PCN#515931

EC NO: 812933
DRWN: MADHAM5 2025/02/12
CHK'D: GGA 2025/03/03
APPR: GGA 2025/03/03

INITIAL REVISION:
DRWN: SMILLER 2009/03/27
APPR: SMILLER 2009/03/27

molex

SALES ASSEMBLY
WAFER-RIGHT ANGLE FULLY SHROUNDED
.100 GRID

PRODUCT CUSTOMER DRAWING

DOCUMENT NUMBER	DOC TYPE	DOC PART	REVISION
SD-74162-001	PSD	001	C1

THIRD ANGLE PROJECTION	DRAWING	SERIES	MATERIAL NUMBER	CUSTOMER	SHEET NUMBER
	D-SIZE	74162	SEE TABLE	GENERAL MARKET	4 OF 8

DOCUMENT STATUS	P1	RELEASE DATE	2025/03/03 16:52:26

VERSION C WITH POLARIZATION SLOTS

(3.81/.150 END CIRCUITS TO INSIDE END WALLS)

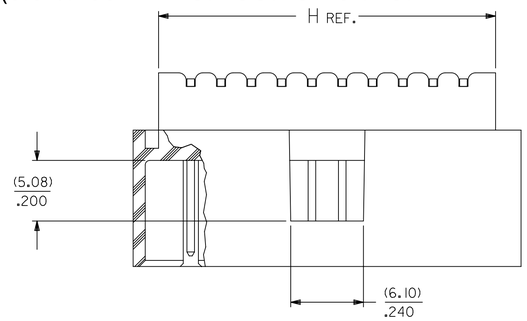

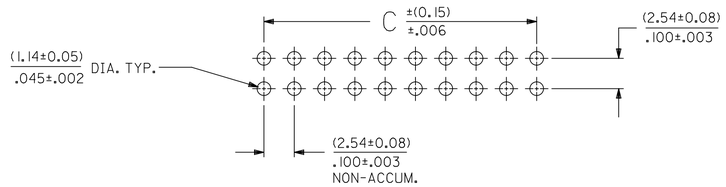

RECOMMENDED P.C. BOARD HOLE LAYOUT

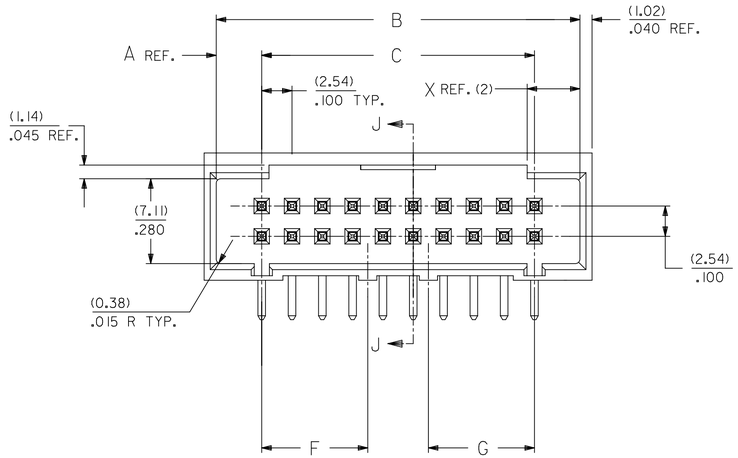

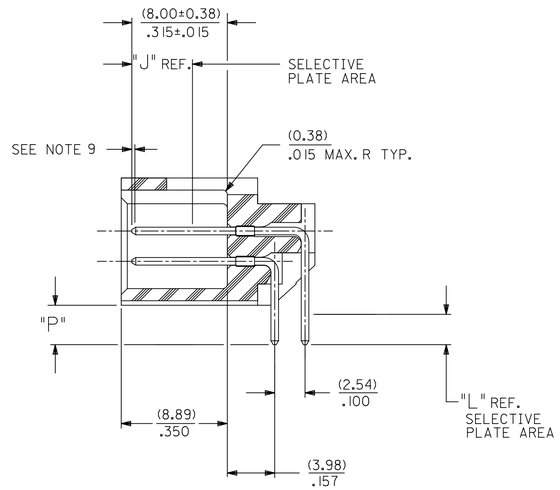

SECTION J-J

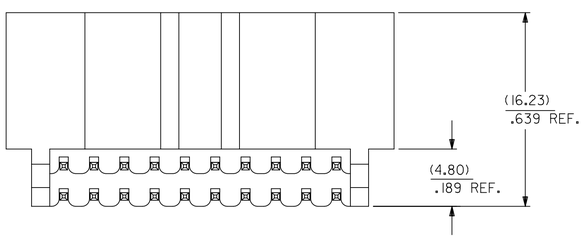

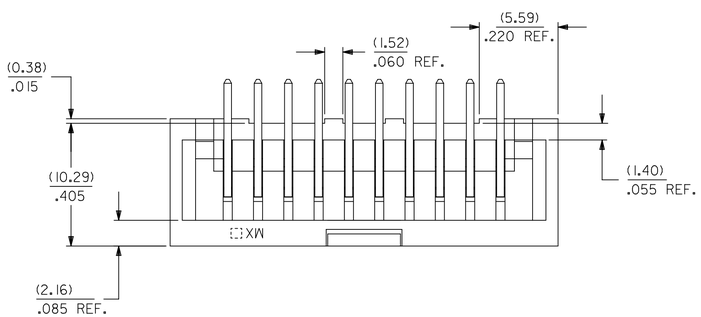

NOTES

1. MATERIAL: SHROUDED WAFER: GLASS FILLED, LIQUID CRYSTAL POLYMER,
   COLOR: BLACK; UL94V-0
   PINS: COPPER ALLOY
2. FINISH:
   TIN - 3.81 MICROMETERS/150 MICROINCHES MINIMUM TIN PLATE
   OVER NICKEL UNDERPLATE OVERALL
   15 GOLD - 0.38 MICROMETERS/15 MICROINCHES MINIMUM GOLD PLATE IN SELECT AREA
   1.91 MICROMETERS/75 MICROINCHES MINIMUM TIN PLATE IN SELECT AREA
   OVER NICKEL UNDERPLATE OVERALL

   30 GOLD - 0.76 MICROMETERS/30 MICROINCHES MINIMUM GOLD PLATE IN SELECT AREA
   1.91 MICROMETERS/75 MICROINCHES MINIMUM TIN PLATE IN SELECT AREA
   OVER NICKEL UNDERPLATE OVERALL
3. PRODUCT SPECIFICATION: PS-74162-0001
4. PACKAGING INFORMATION: SEE CHARTS
5. FOR CHARTED DIMENSIONS AND ASSEMBLY NO.S NOT SHOWN ON THIS SHEET - SEE SHEET 6.
6. 20 CIRCUIT SIZE SHOWN FOR ILLUSTRATION PURPOSES.
7. PIN PUSHOUT FORCE: (17.79 N)/4 LBS MINIMUM.
8. PINS MUST MEET SOLDERABLILITY SPEC. MIL-STD-202 METHOD 208B.
9. ROW TO ROW PIN HEIGHT VARIATION MUST NOT EXCEED (0.25)/.010 IN.
10. THIS PART CONFORMS TO CLASS B REQUIREMENTS OF COSMETIC SPECIFICATION PS-45499-002.

CKT.	DIM. "A"	DIM. "B"	DIM. "C"	DIM. "F"	DIM. "G"	DIM. "H"	DIM. "X"	
06	(3.81) .150	(12.70) .500	(5.08) .200			(10.46) .412	(3.30) .130	
08	(3.81) .150	(15.24) .600	(7.62) .300			(13.00) .512	(3.30) .130	
10	(3.81) .150	(17.78) .700	(10.16) .400			(15.54) .612	(4.42) .174	
12	(3.81) .150	(20.32) .800	(12.70) .500			(18.08) .712	(4.42) .174	
14	(3.81) .150	(22.86) .900	(15.24) .600			(20.62) .812	(4.42) .174	
16	(3.81) .150	(25.40) 1.000	(17.78) .700			(23.16) .912	(4.42) .174	
18	(3.81) .150	(27.94) 1.100	(20.32) .800			(25.70) 1.012	(4.42) .174	
20	(3.81) .150	(30.48) 1.200	(22.86) .900			(28.24) 1.112	(4.42) .174	
22	(3.81) .150	(33.02) 1.300	(25.40) 1.000			(30.78) 1.212	(4.42) .174	
24	(3.81) .150	(35.56) 1.400	(27.94) 1.100	(16.64) .655		(33.32) 1.312	(4.42) .174	
26	(3.81) .150	(38.10) 1.500	(30.48) 1.200	(16.64) .655		(35.86) 1.412	(4.42) .174	
28	(3.81) .150	(40.64) 1.600	(33.02) 1.300	(16.64) .655		(38.40) 1.512	(4.42) .174	
30	(3.81) .150	(43.18) 1.700	(35.56) 1.400	(16.64) .655		(40.94) 1.612	(4.42) .174	
32	(3.81) .150	(45.72) 1.800	(38.10) 1.500	(16.64) .655		(43.48) 1.712	(4.42) .174	
34	(3.81) .150	(48.26) 1.900	(40.64) 1.600	(16.64) .655	(16.76) .660	(46.02) 1.812	(4.42) .174	
36	(3.81) .150	(50.80) 2.000	(43.18) 1.700	(16.64) .655	(16.76) .660	(48.56) 1.912	(4.42) .174	
38	(3.81) .150	(53.34) 2.100	(45.72) 1.800	(16.64) .655	(16.76) .660	(51.10) 2.012	(4.42) .174	
40	(3.81) .150	(55.88) 2.200	(48.26) 1.900	(16.64) .655	(16.76) .660	(53.64) 2.112	(4.42) .174	
42	(3.81) .150	(58.42) 2.300	(50.80) 2.000	(16.64) .655	(16.76) .660	(56.18) 2.212	(4.42) .174	
44	(3.81) .150	(60.96) 2.400	(53.34) 2.100	(19.05) .750	(16.76) .660	(58.72) 2.312	(4.42) .174	
46	(3.81) .150	(63.50) 2.500	(55.88) 2.200	(19.05) .750	(16.76) .660	(61.26) 2.412	(4.42) .174	
48	(3.81) .150	(66.04) 2.600	(58.42) 2.300	(19.05) .750	(16.76) .660	(63.80) 2.512	(4.42) .174	
50	(3.81) .150	(68.58) 2.700	(60.96) 2.400	(19.05) .750	(16.76) .660	(66.34) 2.612	(4.42) .174	
52	(3.81) .150	(71.12) 2.800	(63.50) 2.500	(19.05) .750	(16.76) .660	(68.88) 2.712	(4.42) .174	
54	(3.81) .150	(73.66) 2.900	(66.04) 2.600	(21.59) .850	(21.84) .860	(71.42) 2.812	(4.42) .174	
56	(3.81) .150	(76.20) 3.000	(68.58) 2.700	(21.59) .850	(21.84) .860	(73.96) 2.912	(4.42) .174	
58	(3.81) .150	(78.74) 3.100	(71.12) 2.800	(27.81) 1.095	(26.92) 1.060	(76.50) 3.012	(4.42) .174	
60	(3.81) .150	(81.28) 3.200	(73.66) 2.900	(27.81) 1.095	(26.92) 1.060	(79.04) 3.112	(4.42) .174	
62	(3.81) .150	(83.82) 3.300	(76.20) 3.000	(27.81) 1.095	(26.92) 1.060	(81.58) 3.212	(4.42) .174	
64	(3.81) .150	(86.36) 3.400	(78.74) 3.100	(27.81) 1.095	(26.92) 1.060	(84.12) 3.312	(4.42) .174	
66	(3.81) .150	(88.90) 3.500	(81.28) 3.200	(27.81) 1.095	(26.92) 1.060	(86.66) 3.412	(4.42) .174	
68	(3.81) .150	(91.44) 3.600	(83.82) 3.300	(27.81) 1.095	(26.92) 1.060	(89.20) 3.512	(4.42) .174	
70	(3.81) .150	(93.98) 3.700	(86.36) 3.400	(27.81) 1.095	(26.92) 1.060	(91.74) 3.612	(4.42) .174	
72	(3.81) .150	(96.52) 3.800	(88.90) 3.500	(27.81) 1.095	(26.92) 1.060	(94.28) 3.712	(4.42) .174	

THIS DRAWING CONTAINS INFORMATION THAT IS PROPRIETARY TO MOLEX ELECTRONIC TECHNOLOGIES, LLC AND SHOULD NOT BE USED WITHOUT WRITTEN PERMISSION

DIMENSION UNITS	SCALE
MM/IN	4:1

GENERAL TOLERANCES (UNLESS SPECIFIED)

	MM	INCH
4 PLACES	±	±
3 PLACES	±	± 0.01
2 PLACES	± 0.25	± 0.014
1 PLACE	± 0.36	±
0 PLACES	±	±
ANGULAR TOL	± 0.5 °	

DRAFT WHERE APPLICABLE MUST REMAIN WITHIN DIMENSIONS

CURRENT REV DESC: REMOVED OBSOLETED PART NUMBERS AS PER PCN#515931

EC NO: 812933
DRWN: MADHAM5 2025/02/12
CHK'D: GGA 2025/03/03
APPR: GGA 2025/03/03

INITIAL REVISION:
DRWN: SMILLER 2009/03/27
APPR: SMILLER 2009/03/27

molex

SALES ASSEMBLY
WAFER-RIGHT ANGLE FULLY SHROUDED
.100 GRID

PRODUCT CUSTOMER DRAWING

DOCUMENT NUMBER	DOC TYPE	DOC PART	REVISION
SD-74162-001	PSD	001	C1

THIRD ANGLE PROJECTION	DRAWING	SERIES	MATERIAL NUMBER	CUSTOMER	SHEET NUMBER
	D-SIZE	74162	SEE TABLE	GENERAL MARKET	5 OF 8

DOCUMENT STATUS	P1	RELEASE DATE	2025/03/03	16:52:26

TEMPLATE: 3D-Dg-Sage-master-tb-prod-D
VERSION: 1.5
DATE: 2021/05/07

VERSION C WITH POLARIZATION SLOTS
(3.81/.150 END CIRCUITS TO INSIDE END WALLS)

ITEM NUMBER 74162	P REF	PLATING FINISH	CONNECTOR END PLATING				PC BOARD END PLATING			INFORMATION PK-70873
			TYPE	J LENGTH			TYPE	L LENGTH	M MEAS.	
-2006-2072	3.30 / .130	TIN	TIN	—			TIN	—		0019
-2106-2172	5.08 / .200	TIN	TIN	—			TIN	—		0019
-2206-2272	3.30 / .130	15 GOLD	GOLD	5.08 / .200			TIN	2.54 / .100		0019
-2306-2372	5.08 / .200	15 GOLD	GOLD	5.08 / .200			TIN	2.54 / .100		0019
-2406-2472	3.30 / .130	30 GOLD	GOLD	5.08 / .200			TIN	2.54 / .100		0019
-2506-2572	5.08 / .200	30 GOLD	GOLD	5.08 / .200			TIN	2.54 / .100		0019
	—			—				—		

NO. OF CKTS	ITEM NUMBER	ITEM NUMBER	ITEM NUMBER	ITEM NUMBER	ITEM NUMBER	ITEM NUMBER	ITEM NUMBER
6	74162-2006	74162-2106	74162-2206	74162-2306	74162-2406	74162-2506	
8	74162-2008	74162-2108	74162-2208	74162-2308	74162-2408	74162-2508	
10	74162-2010	74162-2110	74162-2210	74162-2310	74162-2410	74162-2510	
12	74162-2012	74162-2112	74162-2212	74162-2312	74162-2412	74162-2512	
14	74162-2014	74162-2114	74162-2214	74162-2314	74162-2414	74162-2514	
16	74162-2016	74162-2116	74162-2216	74162-2316	74162-2416	74162-2516	
18	74162-2018	74162-2118	74162-2218	74162-2318	74162-2418	74162-2518	
20	74162-2020	74162-2120	74162-2220	74162-2320	74162-2420	74162-2520	
22	74162-2022	74162-2122	74162-2222	74162-2322	74162-2422	74162-2522	
24	74162-2024	74162-2124	74162-2224	74162-2324	74162-2424	74162-2524	
26	74162-2026	74162-2126	74162-2226	74162-2326	74162-2426	74162-2526	
28	74162-2028	74162-2128	74162-2228	74162-2328	74162-2428	74162-2528	
30	74162-2030	74162-2130	74162-2230	74162-2330	74162-2430	74162-2530	
32	74162-2032	74162-2132	74162-2232	74162-2332	74162-2432	74162-2532	
34	74162-2034	74162-2134	74162-2234	74162-2334	74162-2434	74162-2534	
36	74162-2036	74162-2136	74162-2236	74162-2336	74162-2436	74162-2536	
38	74162-2038	74162-2138	74162-2238	74162-2338	74162-2438	74162-2538	
40	74162-2040	74162-2140	74162-2240	74162-2340	74162-2440	74162-2540	
42	74162-2042	74162-2142	74162-2242	74162-2342	74162-2442	74162-2542	
44	74162-2044	74162-2144	74162-2244	74162-2344	74162-2444	74162-2544	
46	74162-2046	74162-2146	74162-2246	74162-2346	74162-2446	74162-2546	
48	74162-2048	74162-2148	74162-2248	74162-2348	74162-2448	74162-2548	
50	74162-2050	74162-2150	74162-2250	74162-2350	74162-2450	74162-2550	
52	74162-2052	74162-2152	74162-2252	74162-2352	74162-2452	74162-2552	
54	74162-2054	74162-2154	74162-2254	74162-2354	74162-2454	74162-2554	
56	74162-2056	74162-2156	74162-2256	74162-2356	74162-2456	74162-2556	
58	74162-2058	74162-2158	74162-2258	74162-2358	74162-2458	74162-2558	
60	74162-2060	74162-2160	74162-2260	74162-2360	74162-2460	74162-2560	
62	74162-2062	74162-2162	74162-2262	74162-2362	74162-2462	74162-2562	
64	74162-2064	74162-2164	74162-2264	74162-2364	74162-2464	74162-2564	
66	74162-2066	74162-2166	74162-2266	74162-2366	74162-2466	74162-2566	
68	74162-2068	74162-2168	74162-2268	74162-2368	74162-2468	74162-2568	
70	74162-2070	74162-2170	74162-2270	74162-2370	74162-2470	74162-2570	
72	74162-2072	74162-2172	74162-2272	74162-2372	74162-2472	74162-2572	

THIS DRAWING CONTAINS INFORMATION THAT IS PROPRIETARY TO MOLEX ELECTRONIC TECHNOLOGIES, LLC AND SHOULD NOT BE USED WITHOUT WRITTEN PERMISSION

DIMENSION UNITS	SCALE
MM/IN	1:1

GENERAL TOLERANCES (UNLESS SPECIFIED)

	MM	INCH
4 PLACES	±	±
3 PLACES	±	± 0.01
2 PLACES	± 0.25	± 0.014
1 PLACE	± 0.36	±
0 PLACES	±	±
ANGULAR TOL	± 0.5 °	

DRAFT WHERE APPLICABLE MUST REMAIN WITHIN DIMENSIONS

CURRENT REV DESC: REMOVED OBSOLETED PART NUMBERS AS PER PCN#515931

EC NO: 812933
DRWN: MADHAM5 2025/02/12
CHK'D: GGA 2025/03/03
APPR: GGA 2025/03/03

INITIAL REVISION:
DRWN: SMILLER 2009/03/27
APPR: SMILLER 2009/03/27

molex

SALES ASSEMBLY
WAFER-RIGHT ANGLE FULLY SHROUNDED
.100 GRID

PRODUCT CUSTOMER DRAWING

DOCUMENT NUMBER	DOC TYPE	DOC PART	REVISION
SD-74162-001	PSD	001	C1

THIRD ANGLE PROJECTION	DRAWING	SERIES	MATERIAL NUMBER	CUSTOMER	SHEET NUMBER
	D-SIZE	74162	SEE TABLE	GENERAL MARKET	6 OF 8

DOCUMENT STATUS	P1	RELEASE DATE	2025/03/03 16:52:26

PCPRINT Eng-Aqua-Master-Bi-print-D
PCPRINT 2009-03-27
DATE: 2021-10-01T

VERSION A, B, OR C WITH VOID(S)

VERSION A

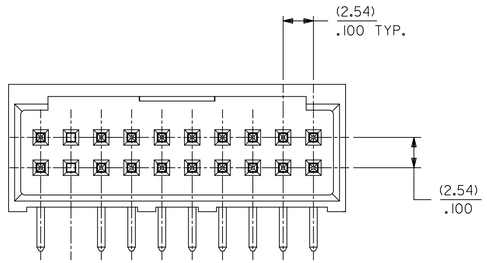

VERSION B

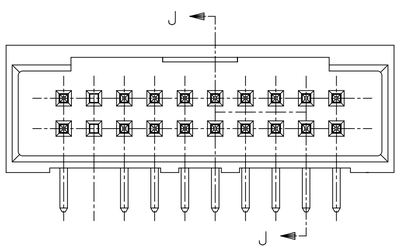

VERSION C

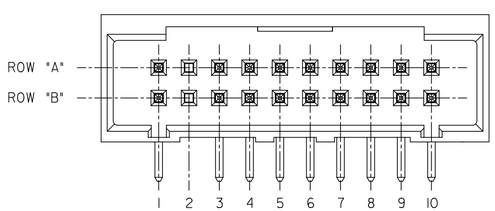

USE FOR LOCATING VOIDED PINS ON ALL STYLES

LETTERS AND NUMBERS ARE NOT DESIGNATED ON WAFER HOUSING

(SEE NOTE 10 AND CHART ON SHEET 8)

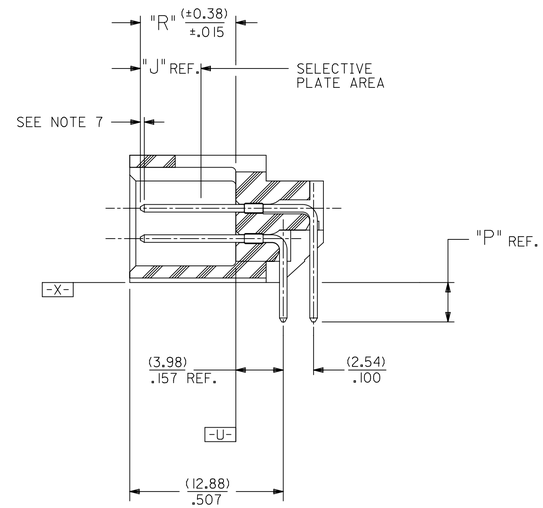

SECTION J-J

NOTES

1. MATERIAL: SHROUDED WAFER: GLASS FILLED, LIQUID CRYSTAL POLYMER, COLOR: BLACK; UL94V-0
   PINS: COPPER ALLOY
2. FINISH:
   TIN - 3.81 MICROMETERS/150 MICROINCHES MINIMUM TIN PLATE OVER NICKEL UNDERPLATE OVERALL
   15 GOLD - 0.38 MICROMETERS/15 MICROINCHES MINIMUM GOLD PLATE IN SELECT AREA
   1.91 MICROMETERS/75 MICROINCHES MINIMUM TIN PLATE IN SELECT AREA
   OVER NICKEL UNDERPLATE OVERALL

   30 GOLD - 0.76 MICROMETERS/30 MICROINCHES MINIMUM GOLD PLATE IN SELECT AREA
   1.91 MICROMETERS/75 MICROINCHES MINIMUM TIN PLATE IN SELECT AREA
   OVER NICKEL UNDERPLATE OVERALL
3. PRODUCT SPECIFICATION: PS-74162-0001
4. PACKAGING INFORMATION: SEE CHARTS
5. PINS MUST MEET SOLDERABLILITY SPEC. MIL-STD-202 METHOD 208B.
6. PIN PUSHOUT FORCE: (17.79 N)/4 LBS MINIMUM.
7. ROW TO ROW PIN HEIGHT VARIATION MUST NOT EXCEED (0.25)/.010 IN.
8. 20 CIRCUIT SIZE WITH PINS VOIDED IN LOCATIONS A-2 AND B-2 SHOWN FOR ILLUSTRATION PURPOSES.
9. FOR VARIABLE DIMENSIONS, CIRCUIT SIZE, WAFER STYLE AND ASSEMBLY NUMBER - SEE SHEET 8.
10. FOR VOIDED PIN LOCATIONS SEE STYLE "C" AND CHART ON SHEET 8.
11. FOR DIMENSIONS NOT SHOWN, FIRST: DETERMINE THE SHROUDED WAFER STYLE FROM CHART ON SHEET 8; SECOND: USING WAFER STYLE, LOCATE THE CORRESPONDING SHEET WITH NON-VOIDED ASSEMBLIES AND DIMENSIONS FOR ALL CIRCUIT SIZES.
12. THIS PART CONFORMS TO CLASS B REQUIREMENTS OF COSMETIC SPECIFICATION PS-45499-002.

THIS DRAWING CONTAINS INFORMATION THAT IS PROPRIETARY TO MOLEX ELECTRONIC TECHNOLOGIES, LLC AND SHOULD NOT BE USED WITHOUT WRITTEN PERMISSION

DIMENSION UNITS	SCALE
MM/IN	4:1

GENERAL TOLERANCES (UNLESS SPECIFIED)

	MM	INCH
4 PLACES	±	±
3 PLACES	±	± 0.01
2 PLACES	± 0.25	± 0.014
1 PLACE	± 0.36	±
0 PLACES	±	±
ANGULAR TOL	± 0.5 °	

DRAFT WHERE APPLICABLE MUST REMAIN WITHIN DIMENSIONS

CURRENT REV DESC: REMOVED OBSOLETED PART NUMBERS AS PER PCN#515931

EC NO: 812933
DRWN: MADHAM5 2025/02/12
CHK'D: GGA 2025/03/03
APPR: GGA 2025/03/03

INITIAL REVISION:
DRWN: SMILLER 2009/03/27
APPR: SMILLER 2009/03/27

molex

SALES ASSEMBLY
WAFER-RIGHT ANGLE FULLY SHROUDED
.100 GRID

PRODUCT CUSTOMER DRAWING

DOCUMENT NUMBER	DOC TYPE	DOC PART	REVISION
SD-74162-001	PSD	001	C1

THIRD ANGLE PROJECTION	DRAWING	SERIES	MATERIAL NUMBER	CUSTOMER	SHEET NUMBER
	D-SIZE	74162	SEE TABLE	GENERAL MARKET	7 OF 8

DOCUMENT STATUS	P1	RELEASE DATE	2025/03/03 16:52:26

FORMAT: D-sp-sys-master-b-port-C
TEMPLATE: 74162
DATE: 2025-03/03

VERSION A, B, OR C WITH VOID(S)

ITEM NUMBER 74162	SHROUDED WAFER STYLE SEE SHEET 7	CKT SIZE		R ± 0.38 / .015	P REF	PLATING FINISH	CONNECTOR END PLATING TYPE	CONNECTOR END PLATING J LENGTH			PC BOARD END PLATING TYPE	PC BOARD END PLATING L LENGTH		VOIDED PIN LOCATION(S) (SEE NOTE 8 ON SHEET 7) ROW	VOIDED PIN LOCATION(S) (SEE NOTE 8 ON SHEET 7) POSITION	INFORMATION PK-70873
74162-3001	B	14		8.00 / .315	3.30 / .130	TIN	TIN	5.08 / .200			TIN	2.54 / .100		A	1	0019
74162-3002	A	16		8.00 / .315	5.08 / .200	TIN	TIN	5.08 / .200			TIN	2.54 / .100		A	8	0019
74612-3003	A	30		8.00 / .315	3.30 / .130	15 GOLD	GOLD	5.08 / .200			TIN	2.54 / .100		A	4	0019
X	X			8.00 / .315	5.08 / .200	15 GOLD	GOLD				TIN					
X	X			8.00 / .315	3.30 / .130	30 GOLD	GOLD				TIN					
X	X			8.00 / .315	5.08 / .200	30 GOLD	GOLD				TIN					
X	X			6.35 / .250	3.30 / .130	TIN	TIN				TIN					

THIS DRAWING CONTAINS INFORMATION THAT IS PROPRIETARY TO MOLEX ELECTRONIC TECHNOLOGIES, LLC AND SHOULD NOT BE USED WITHOUT WRITTEN PERMISSION

DIMENSION UNITS	SCALE
MM/IN	1:1

GENERAL TOLERANCES (UNLESS SPECIFIED)

	MM	INCH
4 PLACES	±	±
3 PLACES	±	± 0.01
2 PLACES	± 0.25	± 0.014
1 PLACE	± 0.36	±
0 PLACES	±	±
ANGULAR TOL	± 0.5 °	

DRAFT WHERE APPLICABLE MUST REMAIN WITHIN DIMENSIONS

CURRENT REV DESC: REMOVED OBSOLETED PART NUMBERS AS PER PCN#515931

EC NO: 812933
DRWN: MADHAM5 2025/02/12
CHK'D: GGA 2025/03/03
APPR: GGA 2025/03/03

INITIAL REVISION:
DRWN: SMILLER 2009/03/27
APPR: SMILLER 2009/03/27

molex

SALES ASSEMBLY
WAFER-RIGHT ANGLE FULLY SHROUNDED
.100 GRID

PRODUCT CUSTOMER DRAWING

THIRD ANGLE PROJECTION	DRAWING	SERIES	MATERIAL NUMBER	CUSTOMER	SHEET NUMBER
	D-SIZE	74162	SEE TABLE	GENERAL MARKET	8 OF 8

DOCUMENT NUMBER	DOC TYPE	DOC PART	REVISION
SD-74162-001	PSD	001	C1

DOCUMENT STATUS	P1	RELEASE DATE	2025/03/03 16:52:26

FORMAT: Eng-Apps-Kanban-B-prod-C
DATE: 2025-03-03
DATE: 2025-03-03