FAIRCHILD SEMICONDUCTOR™

January 1990
Revised October 2000

74ACQ573 • 74ACTQ573
Quiet Series™ Octal Latch with 3-STATE Outputs

General Description

The ACQ/ACTQ573 is a high-speed octal latch with buffered common Latch Enable (LE) and buffered common Output Enable ($\overline{OE}$) inputs. The ACQ/ACTQ573 is functionally identical to the ACQ/ACTQ373 but with inputs and outputs on opposite sides of the package. The ACQ/ACTQ utilizes Fairchild's Quiet Series™ technology to guarantee quiet output switching and improved dynamic threshold performance. FACT Quiet Series™ features GTO™ output control and undershoot corrector in addition to a split ground bus for superior performance.

Features

- I_{CC} and I_{OZ} reduced by 50%
- Guaranteed simultaneous switching noise level and dynamic threshold performance
- Guaranteed pin-to-pin skew AC performance
- Improved latch-up immunity
- Inputs and outputs on opposite sides of package allow easy interface with microprocessors
- Outputs source/sink 24 mA

Ordering Code:

Order Number	Package Number	Package Description
74ACQ573SC	M20B	20-Lead Small Outline Integrated Circuit (SOIC), JEDEC MS-013, 0.300 Wide
74ACQ573SJ	M20D	20-Lead Small Outline Package (SOP), EIAJ TYPE II, 5.3mm Wide
74ACQ573MTC	MTC20	20-Lead Thin Shrink Small Outline Package (TSSOP), JEDEC MO-153, 4.4mm Wide
74ACQ573PC	N20A	20-Lead Plastic Dual-In-Line Package (PDIP), JEDEC MS-001, 0.300 Wide
74ACTQ573SC	M20B	20-Lead Small Outline Integrated Circuit (SOIC), JEDEC MS-013, 0.300 Wide
74ACTQ573SJ	M20D	20-Lead Small Outline Package (SOP), EIAJ TYPE II, 5.3mm Wide
74ACTQ573QSC	MQA20	20-Lead Quarter Size Outline Package (QSOP), JEDEC MO-137, 0.150 Wide
74ACTQ573MTC	MTC20	20-Lead Thin Shrink Small Outline Package (TSSOP), JEDEC MO-153, 4.4mm Wide
74ACTQ573PC	N20A	20-Lead Plastic Dual-In-Line Package (PDIP), JEDEC MS-001, 0.300 Wide

Device also available in Tape and Reel. Specify by appending suffix letter "X" to the ordering code.

Logic Symbols

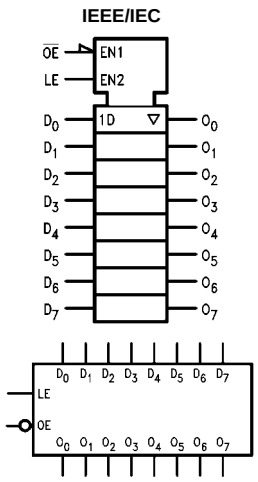

Connection Diagram

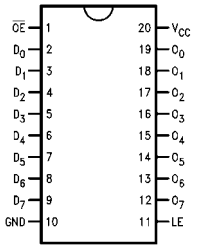

Pin Descriptions

Pin Names	Description
D_0–D_7	Data Inputs
LE	Latch Enable Input
$\overline{OE}$	3-STATE Output Enable Input
O_0–O_7	3-STATE Latch Outputs

FACT™, Quiet Series™, FACT Quiet Series™, and GTO™ are trademarks of Fairchild Semiconductor Corporation

© 2000 Fairchild Semiconductor Corporation

Functional Description

The ACQ/ACTQ573 contains eight D-type latches with 3-STATE output buffers. When the Latch Enable (LE) input is HIGH, data on the D_n inputs enters the latches. In this condition the latches are transparent, i.e., a latch output will change state each time its D-type input changes. When LE is LOW the latches store the information that was present on the D-type inputs at setup time preceding the HIGH-to-LOW transition of LE. The 3-STATE buffers are controlled by the Output Enable ($\overline{OE}$) input. When $\overline{OE}$ is LOW, the buffers are enabled. When $\overline{OE}$ is HIGH the buffers are in the high impedance mode but this does not interfere with entering new data into the latches.

Truth Table

Inputs			Outputs
$\overline{OE}$	LE	D	O_n
L	H	H	H
L	H	L	L
L	L	X	O_0
H	X	X	Z

H = HIGH Voltage
L = LOW Voltage
Z = High Impedance
X = Immaterial
O_0 = Previous O_0 before HIGH-to-LOW transition of Latch Enable

Logic Diagram

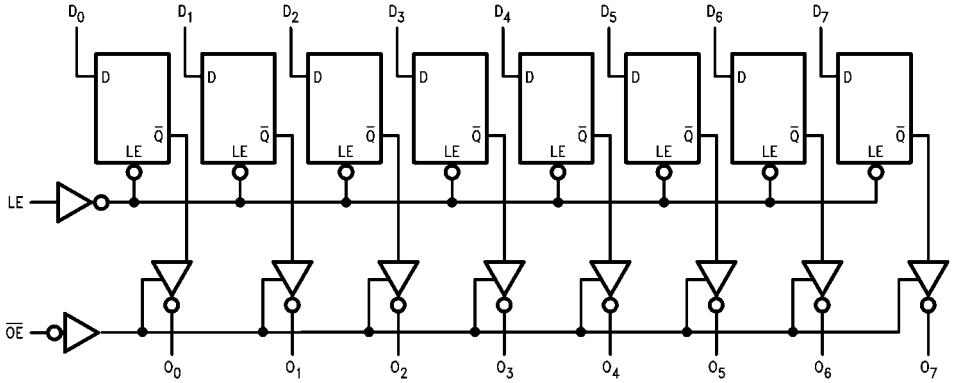

Please note that this diagram is provided only for the understanding of logic operations and should not be used to estimate propagation delays.

Absolute Maximum Ratings(Note 1)

Supply Voltage (V_{CC})	−0.5V to +7.0V
DC Input Diode Current (I_{IK})	
V_I = −0.5V	−20 mA
V_I = V_{CC} + 0.5V	+20 mA
DC Input Voltage (V_I)	−0.5V to V_{CC} + 0.5V
DC Output Diode Current (I_{OK})	
V_O = −0.5V	−20 mA
V_O = V_{CC} + 0.5V	+20 mA
DC Output Voltage (V_O)	−0.5V to V_{CC} + 0.5V
DC Output Source	
or Sink Current (I_O)	±50 mA
DC V_{CC} or Ground Current	
per Output Pin (I_{CC} or I_{GND})	±50 mA
Storage Temperature (T_{STG})	−65°C to +150°C
DC Latchup Source	
or Sink Current	±300 mA
Junction Temperature (T_J)	
PDIP	140°C

Recommended Operating Conditions

Supply Voltage (V_{CC})	
ACQ	2.0V to 6.0V
ACTQ	4.5V to 5.5V
Input Voltage (V_I)	0V to V_{CC}
Output Voltage (V_O)	0V to V_{CC}
Operating Temperature (T_A)	−40°C to +85°C
Minimum Input Edge Rate ΔV/Δt	
ACQ Devices	
V_{IN} from 30% to 70% of V_{CC}	
V_{CC} @ 3.0V, 4.5V, 5.5V	125 mV/ns
Minimum Input Edge Rate ΔV/Δt	
ACTQ Devices	
V_{IN} from 0.8V to 2.0V	
V_{CC} @ 4.5V, 5.5V	125 mV/ns

Note 1: Absolute maximum ratings are those values beyond which damage to the device may occur. The databook specifications should be met, without exception, to ensure that the system design is reliable over its power supply, temperature, and output/input loading variables. Fairchild does not recommend operation of FACT™ circuits outside databook specifications.

DC Electrical Characteristics for ACQ

Symbol	Parameter	V_{CC} (V)	T_A = +25°C Typ	T_A = −40°C to +85°C Guaranteed Limits		Units	Conditions
V_{IH}	Minimum HIGH Level	3.0	1.5	2.1	2.1		V_{OUT} = 0.1V
	Input Voltage	4.5	2.25	3.15	3.15	V	or V_{CC} − 0.1V
		5.5	2.75	3.85	3.85		
V_{IL}	Maximum LOW Level	3.0	1.5	0.9	0.9		V_{OUT} = 0.1V
	Input Voltage	4.5	2.25	1.35	1.35	V	or V_{CC} − 0.1V
		5.5	2.75	1.65	1.65		
V_{OH}	Minimum HIGH Level	3.0	2.99	2.9	2.9		
	Output Voltage	4.5	4.49	4.4	4.4	V	I_{OUT} = −50 μA
		5.5	5.49	5.4	5.4		
							V_{IN} = V_{IL} or V_{IH}
		3.0		2.56	2.46		I_{OH} = −12 mA
		4.5		3.86	3.76	V	I_{OH} = −24 mA
		5.5		4.86	4.76		I_{OH} = −24 mA (Note 2)
V_{OL}	Maximum LOW Level	3.0	0.002	0.1	0.1		
	Output Voltage	4.5	0.001	0.1	0.1	V	I_{OUT} = 50 μA
		5.5	0.001	0.1	0.1		
							V_{IN} = V_{IL} or V_{IH}
		3.0		0.36	0.44		I_{OL} = 12 mA
		4.5		0.36	0.44	V	I_{OL} = 24 mA
		5.5		0.36	0.44		I_{OL} = 24 mA (Note 2)
I_{IN} (Note 4)	Maximum Input Leakage Current	5.5		± 0.1	± 1.0	μA	V_I = V_{CC}, GND
I_{OLD}	Minimum Dynamic	5.5			75	mA	V_{OLD} = 1.65 V_{Max}
I_{OHD}	Output Current (Note 3)	5.5			−75	mA	V_{OHD} = 3.85 V_{Min}
I_{CC} (Note 4)	Maximum Quiescent Supply Current	5.5		4.0	40.0	μA	V_{IN} = V_{CC} or GND
I_{OZ}	Maximum 3-STATE						V_I (OE) = V_{IL}, V_{IH}
	Leakage Current	5.5		±0.25	±2.5	μA	V_I = V_{CC}, GND
							V_O = V_{CC}, GND
V_{OLP}	Quiet Output	5.0	1.1	1.5		V	Figures 1, 2
	Maximum Dynamic V_{OL}						(Note 5)(Note 6)

DC Electrical Characteristics for ACQ (Continued)

Symbol	Parameter	V_{CC} (V)	$T_A = +25°C$ Typ	$T_A = -40°C$ to $+85°C$ Guaranteed Limits		Units	Conditions
V_{OLV}	Quiet Output Minimum Dynamic V_{OL}	5.0	–0.6	–1.2		V	Figures 1, 2 (Note 5)(Note 6)
V_{IHD}	Minimum HIGH Level Dynamic Input Voltage	5.0	3.1	3.5		V	(Note 5)(Note 7)
V_{ILD}	Maximum LOW Level Dynamic Input Voltage	5.0	1.9	1.5		V	(Note 5)(Note 7)

Note 2: All outputs loaded; thresholds on input associated with output under test.

Note 3: Maximum test duration 2.0 ms, one output loaded at a time.

Note 4: I_{IN} and I_{CC} @ 3.0V are guaranteed to be less than or equal to the respective limit @ 5.5V V_{CC}.

Note 5: Plastic DIP package.

Note 6: Max number of outputs defined as (n). Data Inputs are driven 0V to 5V. One output @ GND.

Note 7: Max number of Data Inputs (n) switching. (n – 1) Inputs switching 0V to 5V (ACQ). Input-under-test switching: 5V to threshold (V_{ILD}), 0V to threshold (V_{IHD}), f = 1 MHz.

DC Electrical Characteristics for ACTQ

Symbol	Parameter	V_{CC} (V)	$T_A = +25°C$ Typ	$T_A = -40°C$ to $+85°C$ Guaranteed Limits		Units	Conditions
V_{IH}	Minimum HIGH Level Input Voltage	4.5 5.5	1.5 1.5	2.0 2.0	2.0 2.0	V	V_{OUT} = 0.1V or V_{CC} – 0.1V
V_{IL}	Maximum LOW Level Input Voltage	4.5 5.5	1.5 1.5	0.8 0.8	0.8 0.8	V	V_{OUT} = 0.1V or V_{CC} – 0.1V
V_{OH}	Minimum HIGH Level Output Voltage	4.5 5.5	4.49 5.49	4.4 5.4	4.4 5.4	V	I_{OUT} = –50 μA
		4.5 5.5		3.86 4.86	3.76 4.76	V	$V_{IN} = V_{IL}$ or V_{IH} I_{OH} = –24 mA I_{OH} = –24 mA (Note 8)
V_{OL}	Maximum LOW Level Output Voltage	4.5 5.5	0.001 0.001	0.1 0.1	0.1 0.1	V	I_{OUT} = 50 μA
		4.5 5.5		0.36 0.36	0.44 0.44	V	$V_{IN} = V_{IL}$ or V_{IH} I_{OL} = 24 mA I_{OL} = 24 mA (Note 8)
I_{IN}	Maximum Input Leakage Current	5.5		±0.1	±1.0	μA	$V_I = V_{CC}$, GND
I_{OZ}	Maximum 3-STATE Leakage Current	5.5		±0.25	±2.5	μA	$V_I = V_{IL}$, V_{IH} $V_O = V_{CC}$, GND
I_{CCT}	Maximum I_{CC}/Input	5.5	0.6		1.5	mA	$V_I = V_{CC}$ – 2.1V
I_{OLD}	Minimum Dynamic	5.5			75	mA	V_{OLD} = 1.65V Max
I_{OHD}	Output Current (Note 9)	5.5			–75	mA	V_{OHD} = 3.85V Min
I_{CC}	Maximum Quiescent Supply Current	5.5		4.0	40.0	μA	$V_{IN} = V_{CC}$ or GND
V_{OLP}	Quiet Output Maximum Dynamic V_{OL}	5.0	1.1	1.5		V	Figures 1, 2 (Note 10)(Note 11)
V_{OLV}	Quiet Output Minimum Dynamic V_{OL}	5.0	–0.6	–1.2		V	Figures 1, 2 (Note 10)(Note 11)
V_{IHD}	Minimum HIGH Level Dynamic Input Voltage	5.0	1.9	2.2		V	(Note 10)(Note 12)
V_{ILD}	Maximum LOW Level Dynamic Input Voltage	5.0	1.2	0.8		V	(Note 10)(Note 12)

Note 8: All outputs loaded; thresholds on input associated with output under test.

Note 9: Maximum test duration 2.0 ms, one output loaded at a time.

Note 10: Plastic DIP package.

Note 11: Max number of outputs defined as (n). Data Inputs are driven 0V to 3V. One output @ GND.

Note 12: Max number of data inputs (n) switching. (n – 1) inputs switching 0V to 3V (ACTQ). Input-under-test switching: 3V to threshold (V_{ILD}), 0V to threshold (V_{IHD}), f =1 MHz.

AC Electrical Characteristics for ACQ

Symbol	Parameter	V_{CC} (V) (Note 13)	$T_A = +25°C$, $C_L = 50$ pF			$T_A = -40°C$ to $+85°C$, $C_L = 50$ pF		Units
			Min	Typ	Max	Min	Max	
t_{PHL}	Propagation Delay	3.3	2.5	8.5	10.5	2.5	11.0	ns
t_{PLH}	D_n to O_n	5.0	1.5	5.5	7.0	1.5	7.5	
t_{PLH}	Propagation Delay	3.3	2.5	8.5	12.0	2.5	12.5	ns
t_{PHL}	LE to O_n	5.0	2.0	6.0	8.0	2.0	8.5	
t_{PZL}	Output Enable Time	3.3	2.5	8.5	13.0	2.5	13.5	ns
t_{PZH}		5.0	1.5	6.0	8.5	1.5	9.0	
t_{PHZ}	Output Disable Time	3.3	1.0	9.0	14.5	1.0	15.0	ns
t_{PLZ}		5.0	1.0	6.0	9.5	1.0	10.0	
t_{OSHL}	Output to Output Skew (Note 14)	3.3		1.0	1.5		1.5	ns
t_{OSLH}	D_n to O_n	5.0		0.5	1.0		1.0	

Note 13: Voltage Range 5.0 is 5.0V ± 0.5V

Voltage Range 3.3 is 3.3V ± 0.3V

Note 14: Skew is defined as the absolute value of the difference between the actual propagation delay for any two separate outputs of the same device. The specification applies to any outputs switching in the same direction, either HIGH-to-LOW (t_{OSHL}) or LOW-to-HIGH (t_{OSLH}). Parameter guaranteed by design.

AC Operating Requirements for ACQ

Symbol	Parameter	V_{CC} (V) (Note 15)	$T_A = +25°C$, $C_L = 50$ pF		$T_A = -40°C$ to $+85°C$, $C_L = 50$ pF	Units
			Typ	Guaranteed Minimum		
t_S	Setup Time, HIGH or LOW	3.3	0	3.0	3.0	ns
	D_n to LE	5.0	0	3.0	3.0	
t_H	Hold Time, HIGH or LOW	3.3	0	1.5	1.5	ns
	D_n to LE	5.0	0	1.5	1.5	
t_W	LE Pulse Width, HIGH	3.3	2.0	4.0	4.0	ns
		5.0	2.0	4.0	4.0	

Note 15: Voltage Range 5.0 is 5.0V ± 0.5V

Voltage Range 3.3 is 3.3V ± 0.3V

AC Electrical Characteristics for ACTQ

Symbol	Parameter	V_{CC} (V) (Note 16)	$T_A = +25°C$, $C_L = 50$ pF			$T_A = -40°C$ to $+85°C$, $C_L = 50$ pF		Units
			Min	Typ	Max	Min	Max	
t_{PHL}	Propagation Delay	5.0	2.0	6.5	7.5	2.0	8.0	ns
t_{PLH}	$D_n$to O_n							
t_{PLH}	Propagation Delay	5.0	2.5	7.0	8.5	2.5	9.0	ns
t_{PHL}	LE to O_n							
t_{PZL}, t_{PZH}	Output Enable Time	5.0	2.0	7.0	9.0	2.0	9.5	ns
t_{PHZ}, t_{PLZ}	Output Disable Time	5.0	1.0	8.0	10.0	1.0	10.5	ns
t_{OSHL}	Output to Output Skew (Note 17)	5.0		0.5	1.0		1.0	ns
t_{OSLH}	D_n to O_n							

Note 16: Voltage Range 5.0 is 5.0V ± 0.5V

Note 17: Skew is defined as the absolute value of the difference between the actual propagation delay for any two separate outputs of the same device. The specification applies to any outputs switching in the same direction, either HIGH-to-LOW (t_{OSHL}) or LOW-to-HIGH (t_{OSLH}). Parameter guaranteed by design.

AC Operating Requirements for ACTQ

Symbol	Parameter	V_{CC} (V) (Note 18)	$T_A = +25°C$, $C_L = 50$ pF		$T_A = -40°C$ to $+85°C$, $C_L = 50$ pF	Units
			Typ	Guaranteed Minimum		
t_S	Setup Time, HIGH or LOW D_n to LE	5.0	0	3.0	3.0	ns
t_H	Hold Time, HIGH or LOW D_n to LE	5.0	0	1.5	1.5	ns
t_W	LE Pulse Width, HIGH	5.0	2.0	4.0	4.0	ns

Note 18: Voltage Range 5.0 is 5.0V ± 0.5V

Capacitance

Symbol	Parameter	Typ	Units	Conditions
C_{IN}	Input Capacitance	4.5	pF	V_{CC} = OPEN
C_{PD}	Power Dissipation Capacitance	42.0	pF	V_{CC} = 5.0V

FACT Noise Characteristics

The setup of a noise characteristics measurement is critical to the accuracy and repeatability of the tests. The following is a brief description of the setup used to measure the noise characteristics of FACT.

Equipment:

Hewlett Packard Model 8180A Word Generator

PC-163A Test Fixture

Tektronics Model 7854 Oscilloscope

Procedure:

1. Verify Test Fixture Loading: Standard Load 50 pF, 500Ω.
2. Deskew the HFS generator so that no two channels have greater than 150 ps skew between them. This requires that the oscilloscope be deskewed first. It is important to deskew the HFS generator channels before testing. This will ensure that the outputs switch simultaneously.
3. Terminate all inputs and outputs to ensure proper loading of the outputs and that the input levels are the correct voltage.
4. Set the HFS generator to toggle all but one output at a frequency of 1 MHz. Greater frequencies will increase DUT heating and affect the results of the measurement.
5. Set the HFS generator input levels at 0V LOW and 3V HIGH for ACT devices and 0V LOW and 5V HIGH for AC devices. Verify levels with an oscilloscope.

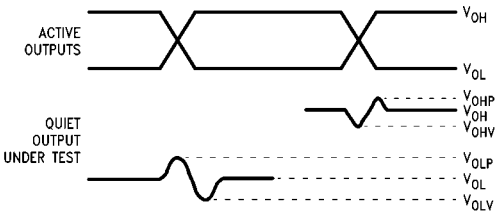

Note 19: V_{OHV} and V_{OLP} are measured with respect to ground reference.

Note 20: Input pulses have the following characteristics: f = 1 MHz, t_r = 3 ns, t_f = 3 ns, skew < 150 ps.

FIGURE 1. Quiet Output Noise Voltage Waveforms

V_{OLP}/V_{OLV} and V_{OHP}/V_{OHV}:

- Determine the quiet output pin that demonstrates the greatest noise levels. The worst case pin will usually be the furthest from the ground pin. Monitor the output voltages using a 50Ω coaxial cable plugged into a standard SMB type connector on the test fixture. Do not use an active FET probe.
- Measure V_{OLP} and V_{OLV} on the quiet output during the worst case transition for active and enable. Measure V_{OHP} and V_{OHV} on the quiet output during the worst case active and enable transition.
- Verify that the GND reference recorded on the oscilloscope has not drifted to ensure the accuracy and repeatability of the measurements.

V_{ILD} and V_{IHD}:

- Monitor one of the switching outputs using a 50Ω coaxial cable plugged into a standard SMB type connector on the test fixture. Do not use an active FET probe.
- First increase the input LOW voltage level, V_{IL}, until the output begins to oscillate or steps out a min of 2 ns. Oscillation is defined as noise on the output LOW level that exceeds V_{IL} limits, or on output HIGH levels that exceed V_{IH} limits. The input LOW voltage level at which oscillation occurs is defined as V_{ILD}.
- Next decrease the input HIGH voltage level, V_{IH}, until the output begins to oscillate or steps out a min of 2 ns. Oscillation is defined as noise on the output LOW level that exceeds V_{IL} limits, or on output HIGH levels that exceed V_{IH} limits. The input HIGH voltage level at which oscillation occurs is defined as V_{IHD}.
- Verify that the GND reference recorded on the oscilloscope has not drifted to ensure the accuracy and repeatability of the measurements.

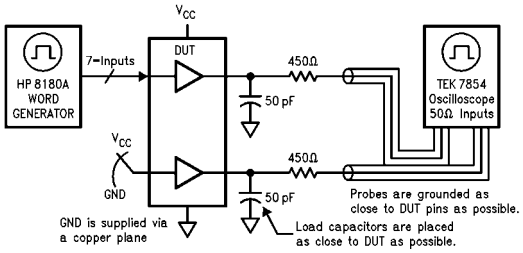

FIGURE 2. Simultaneous Switching Test Circuit

Physical Dimensions inches (millimeters) unless otherwise noted

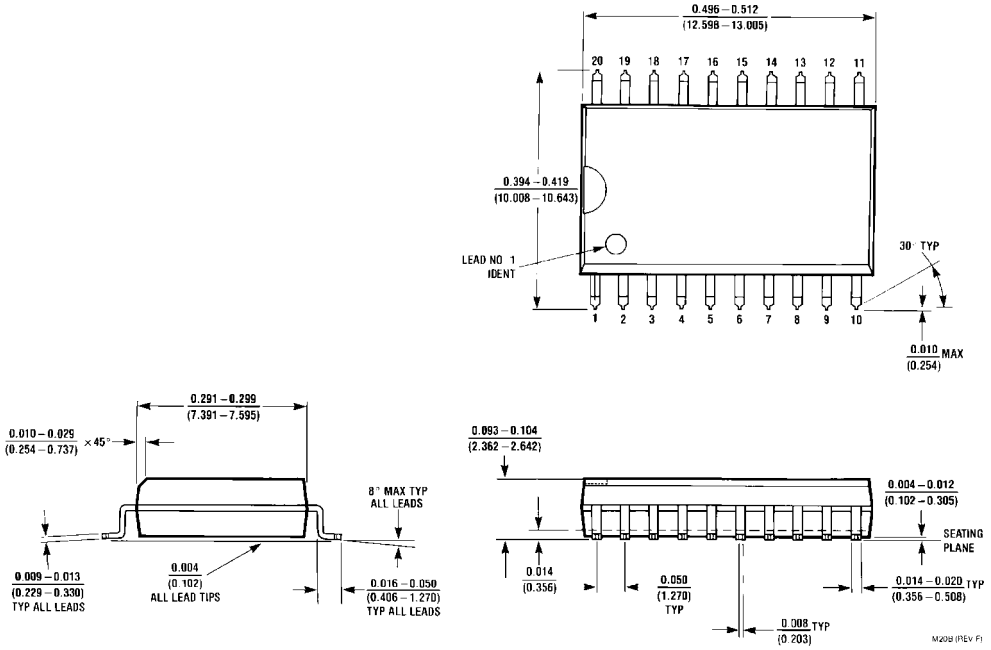

20-Lead Small Outline Integrated Circuit (SOIC), JEDEC MS-013, 0.300 Wide
Package Number M20B

Physical Dimensions inches (millimeters) unless otherwise noted (Continued)

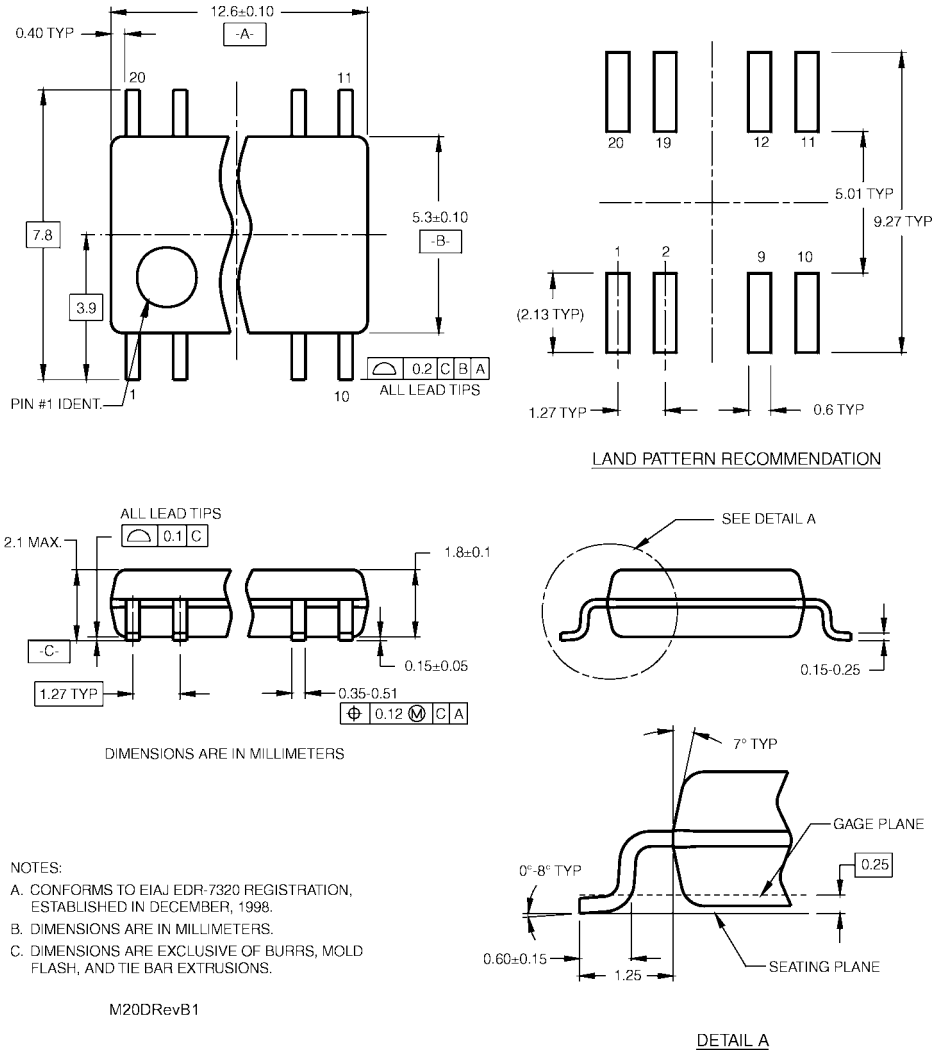

NOTES:

A. CONFORMS TO EIAJ EDR-7320 REGISTRATION, ESTABLISHED IN DECEMBER, 1998.

B. DIMENSIONS ARE IN MILLIMETERS.

C. DIMENSIONS ARE EXCLUSIVE OF BURRS, MOLD FLASH, AND TIE BAR EXTRUSIONS.

M20DRevB1

20-Lead Small Outline Package (SOP), EIAJ TYPE II, 5.3mm Wide
Package Number M20D

Physical Dimensions inches (millimeters) unless otherwise noted (Continued)

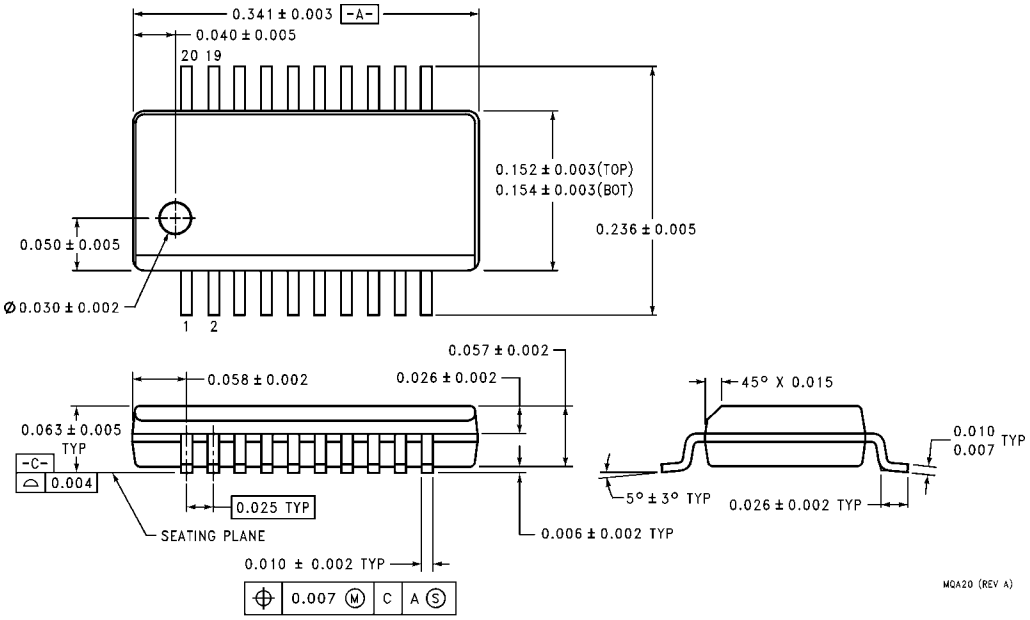

20-Lead Quarter Size Outline Package (QSOP), JEDEC MO-137, 0.150 Wide
Package Number MQA20

Physical Dimensions inches (millimeters) unless otherwise noted (Continued)

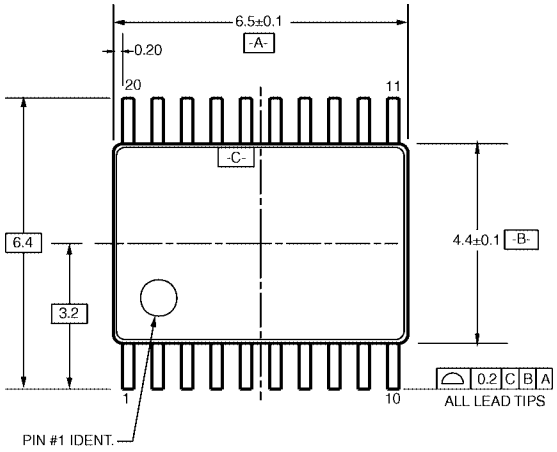

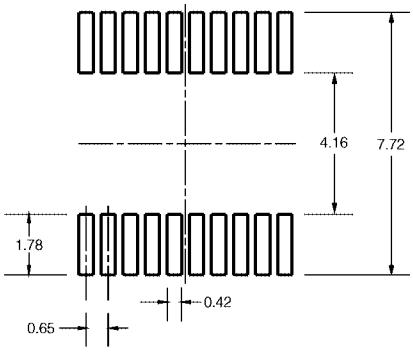

LAND PATTERN RECOMMENDATION

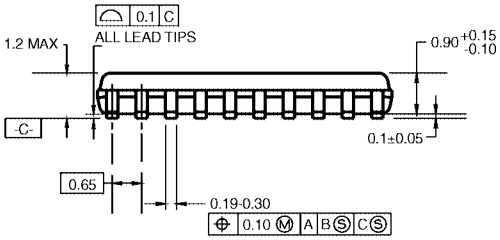

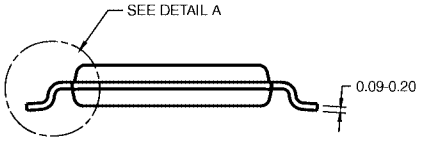

DIMENSIONS ARE IN MILLIMETERS

NOTES:

A. CONFORMS TO JEDEC REGISTRATION MO-153, VARIATION AC, REF NOTE 6, DATE 7/93.

B. DIMENSIONS ARE IN MILLIMETERS.

C. DIMENSIONS ARE EXCLUSIVE OF BURRS, MOLD FLASH, AND TIE BAR EXTRUSIONS.

D. DIMENSIONS AND TOLERANCES PER ANSI Y14.5M, 1982.

MTC20RevD1

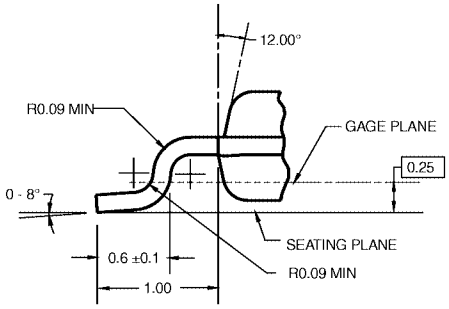

DETAIL A

20-Lead Thin Shrink Small Outline Package (TSSOP), JEDEC MO-153, 4.4mm Wide
Package Number MTC20

Physical Dimensions inches (millimeters) unless otherwise noted (Continued)

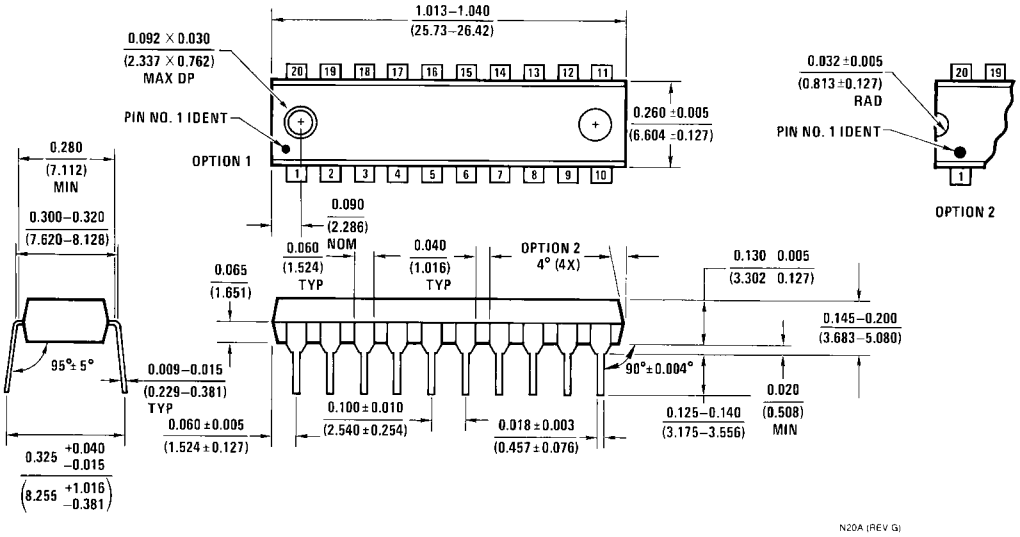

20-Lead Plastic Dual-In-Line Package (PDIP), JEDEC MS-001, 0.300 Wide
Package Number N20A

Fairchild does not assume any responsibility for use of any circuitry described, no circuit patent licenses are implied and Fairchild reserves the right at any time without notice to change said circuitry and specifications.

LIFE SUPPORT POLICY

FAIRCHILD'S PRODUCTS ARE NOT AUTHORIZED FOR USE AS CRITICAL COMPONENTS IN LIFE SUPPORT DEVICES OR SYSTEMS WITHOUT THE EXPRESS WRITTEN APPROVAL OF THE PRESIDENT OF FAIRCHILD SEMICONDUCTOR CORPORATION. As used herein:

1. Life support devices or systems are devices or systems which, (a) are intended for surgical implant into the body, or (b) support or sustain life, and (c) whose failure to perform when properly used in accordance with instructions for use provided in the labeling, can be reasonably expected to result in a significant injury to the user.
2. A critical component in any component of a life support device or system whose failure to perform can be reasonably expected to cause the failure of the life support device or system, or to affect its safety or effectiveness.

www.fairchildsemi.com