FAIRCHILD SEMICONDUCTOR®

May 2007

74ACTQ02
Quad 2-Input NOR Gate

Features

- I_{CC} reduced by 50%
- Guaranteed simultaneous switching noise level and dynamic threshold performance
- Improved latch-up immunity
- Outputs source/sink 24mA
- ACTQ02 has TTL-compatible inputs

General Description

The ACTQ02 contains four, 2-input NOR gates.

The ACTQ utilize Fairchild's Quiet Series technology to guarantee quiet output switching and improved dynamic threshold performance. FACT Quiet Series™ features GTO™ output control and undershoot corrector in addition to a split ground bus for superior ACMOS performance.

Ordering Information

Order Number	Package Number	Package Description
74ACTQ02SC	M14A	14-Lead Small Outline Integrated Circuit (SOIC), JEDEC MS-012, 0.150" Narrow
74ACTQ02SJ	M14D	14-Lead Small Outline Package (SOP), EIAJ TYPE II, 5.3mm Wide
74ACTQ02MTC	MTC14	14-Lead Thin Shrink Small Outline Package (TSSOP), JEDEC MO-153, 4.4mm Wide

Device also available in Tape and Reel. Specify by appending suffix letter "X" to the ordering number.
Pb-Free package per JEDEC J-STD-020B.

Connection Diagram

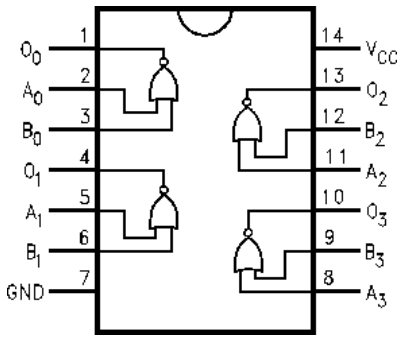

Logic Symbol

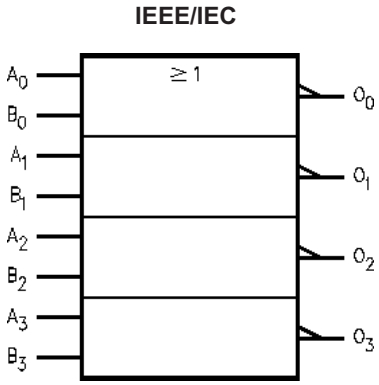

Pin Description

Pin Names	Description
A_n, B_n	Inputs
$\overline{O}_n$	Outputs

FACT™, FACT Quiet Series™, and GTO™ are trademarks of Fairchild Semiconductor Corporation.

©1990 Fairchild Semiconductor Corporation

Absolute Maximum Ratings

Stresses exceeding the absolute maximum ratings may damage the device. The device may not function or be operable above the recommended operating conditions and stressing the parts to these levels is not recommended. In addition, extended exposure to stresses above the recommended operating conditions may affect device reliability. The absolute maximum ratings are stress ratings only.

Symbol	Parameter	Rating
V_{CC}	Supply Voltage	–0.5V to +7.0V
I_{IK}	DC Input Diode Current	
	$V_I = –0.5V$	–20mA
	$V_I = V_{CC} + 0.5V$	+20mA
V_I	DC Input Voltage	–0.5V to V_{CC} + 0.5V
I_{OK}	DC Output Diode Current	
	$V_O = –0.5V$	–20mA
	$V_O = V_{CC} + 0.5V$	+20mA
V_O	DC Output Voltage	–0.5V to V_{CC} + 0.5V
I_O	DC Output Source or Sink Current	±50mA
I_{CC} or I_{GND}	DC V_{CC} or Ground Current per Output Pin	±50mA
T_{STG}	Storage Temperature	–65°C to +150°C
	DC Latch-Up Source or Sink Current	±300mA
T_J	Junction Temperature	140°C

Recommended Operating Conditions

The Recommended Operating Conditions table defines the conditions for actual device operation. Recommended operating conditions are specified to ensure optimal performance to the datasheet specifications. Fairchild does not recommend exceeding them or designing to absolute maximum ratings.

Symbol	Parameter	Rating
V_{CC}	Supply Voltage	4.5V to 5.5V
V_I	Input Voltage	0V to V_{CC}
V_O	Output Voltage	0V to V_{CC}
T_A	Operating Temperature	–40°C to +85°C
$\Delta V / \Delta t$	Minimum Input Edge Rate:	125mV/ns
	V_{IN} from 0.8V to 2.0V, V_{CC} @ 4.5V, 5.5V	

©1990 Fairchild Semiconductor Corporation

DC Electrical Characteristics

Symbol	Parameter	V_{CC} (V)	Conditions	T_A = +25°C	T_A = –40°C to +85°C		Units
				Typ.	Guaranteed Limits		
V_{IH}	Minimum HIGH Level Input Voltage	4.5	V_{OUT} = 0.1V or V_{CC} – 0.1V	1.5	2.0	2.0	V
		5.5		1.5	2.0	2.0	
V_{IL}	Maximum LOW Level Input Voltage	4.5	V_{OUT} = 0.1V or V_{CC} – 0.1V	1.5	0.8	0.8	V
		5.5		1.5	0.8	0.8	
V_{OH}	Minimum HIGH Level Output Voltage	4.5	I_{OUT} = –50µA	4.49	4.4	4.4	V
		5.5		5.49	5.4	5.4	
		4.5	V_{IN} = V_{IL} or V_{IH}: I_{OH} = –24mA		3.86	3.76	
		5.5	I_{OH} = –24mA(1)		4.86	4.76	
V_{OL}	Maximum LOW Level Output Voltage	4.5	I_{OUT} = 50µA	0.001	0.1	0.1	V
		5.5		0.001	0.1	0.1	
		4.5	V_{IN} = V_{IL} or V_{IH}: I_{OL} = 24mA		0.36	0.44	
		5.5	I_{OL} = 24mA(1)		0.36	0.44	
I_{IN}	Maximum Input Leakage Current	5.5	V_I = V_{CC}, GND		±0.1	±1.0	µA
I_{CCT}	Maximum I_{CC}/Input	5.5	V_I = V_{CC} – 2.1V	1.6		1.5	mA
I_{OLD}	Minimum Dynamic Output Current(2)	5.5	V_{OLD} = 1.65V Max.			75	mA
I_{OHD}		5.5	V_{OHD} = 3.85V Min.			–75	mA
I_{CC}	Maximum Quiescent Supply Current	5.5	V_{IN} = V_{CC} or GND		2.0	20.0	µA
V_{OLP}	Quiet Output Maximum Dynamic V_{OL}	5.0	Figures 1 & 2(3)	1.1	1.5		V
V_{OLV}	Quiet Output Minimum Dynamic V_{OL}	5.0	Figures 1 & 2(3)	–0.6	–1.2		V
V_{IHD}	Minimum HIGH Level Dynamic Input Voltage	5.0	(4)	1.9	2.2		V
V_{ILD}	Maximum LOW Level Dynamic Input Voltage	5.0	(4)	1.2	0.8		V

Notes:

1. All outputs loaded; thresholds on input associated with output under test.
2. Maximum test duration 2.0ms, one output loaded at a time.
3. Max number of outputs defined as (n). Data inputs are 0V to 3V. One output @ GND.
4. Max number of data inputs (n) switching. (n–1) inputs switching 0V to 3V. Input-under-test switching: 3V to threshold (V_{ILD}), 0V to threshold (V_{IHD}), f = 1MHz.

©1990 Fairchild Semiconductor Corporation

AC Electrical Characteristics

Symbol	Parameter	V_{CC} (V)[5]	T_A = +25°C, C_L = 50pF			T_A = –40°C to +85°C, C_L = 50pF		Units
			Min.	Typ.	Max.	Min.	Max.	
t_{PLH}	Propagation Delay, Data to Output	5.0	2.0	5.0	7.5	2.0	8.0	ns
t_{PHL}	Propagation Delay, Data to Output	5.0	2.0	5.0	7.5	2.0	8.0	ns
t_{OSHL}, t_{OSLH}	Output to Output Skew[6]	5.0		0.5	1.0		1.0	ns

Notes:

5. Voltage range 5.0 is 5.0V ± 0.5V.
6. Skew is defined as the absolute value of the difference between the actual propagation delay for any two separate outputs of the same device. The specification applies to any outputs switching in the same direction, either HIGH-to-LOW (t_{OSHL}) or LOW-to-HIGH (t_{OSLH}). Parameter guaranteed by design.

Capacitance

Symbol	Parameter	Conditions	Typ.	Units
C_{IN}	Input Capacitance	V_{CC} = OPEN	4.5	pF
C_{PD}	Power Dissipation Capacitance	V_{CC} = 5.0V	74	pF

©1990 Fairchild Semiconductor Corporation

FACT™ Noise Characteristics

The setup of a noise characteristics measurement is critical to the accuracy and repeatability of the tests. The following is a brief description of the setup used to measure the noise characteristics of FACT.

Equipment:

Hewlett Packard Model 8180A Word Generator

PC-163A Test Fixture

Tektronics Model 7854 Oscilloscope

Procedure:

1. Verify Test Fixture Loading: Standard Load 50pF, 500Ω.
2. Deskew the HFS generator so that no two channels have greater than 150ps skew between them. This requires that the oscilloscope be deskewed first. It is important to deskew the HFS generator channels before testing. This will ensure that the outputs switch simultaneously.
3. Terminate all inputs and outputs to ensure proper loading of the outputs and that the input levels are at the correct voltage.
4. Set the HFS generator to toggle all but one output at a frequency of 1MHz. Greater frequencies will increase DUT heating and effect the results of the measurement.

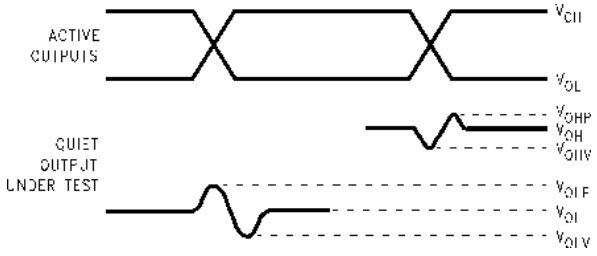

Notes:

7. V_{OHV} and V_{OLP} are measured with respect to ground reference.
8. Input pulses have the following characteristics: f = 1MHz, t_r = 3ns, t_f = 3ns, skew < 150ps.

Figure 1. Quiet Output Noise Voltage Waveforms

5. Set the HFS generator input levels at 0V LOW and 3V HIGH for ACT devices and 0V LOW and 5V HIGH for AC devices. Verify levels with an oscilloscope.

V_{OLP}/V_{OLV} and V_{OHP}/V_{OHV}:

- Determine the quiet output pin that demonstrates the greatest noise levels. The worst case pin will usually be the furthest from the ground pin. Monitor the output voltages using a 50Ω coaxial cable plugged into a standard SMB type connector on the test fixture. Do not use an active FET probe.
- Measure V_{OLP} and V_{OLV} on the quiet output during worst case transition for active and enable. Measure V_{OHP} and V_{OHV} on the quiet output during the worst case active and enable transition.
- Verify that the GND reference recorded on the oscilloscope has not drifted to ensure the accuracy and repeatability of the measurements.

V_{ILD} and V_{IHD}:

- Monitor one of the switching outputs using a 50Ω coaxial cable plugged into a standard SMB type connector on the test fixture. Do not use an active FET probe.
- First increase the input LOW voltage level, V_{IL}, until the output begins to oscillator steps out a min of 2ns. Oscillation is defined as noise on the output LOW level that exceeds V_{IL} limits, or on output HIGH levels that exceed V_{IH} limits. The input LOW voltage level at which oscillation occurs is defined as V_{ILD}.
- Next decrease the input HIGH voltage level, V_{IH}, until the output begins to oscillate or steps out a min of 2ns. Oscillation is defined as noise on the output LOW level that exceeds V_{IL} limits, or on output HIGH levels that exceed V_{IH} limits. The input HIGH voltage level at which oscillation occurs is defined as V_{IHD}.
- Verify that the GND reference recorded on the oscilloscope has not drifted to ensure the accuracy and repeatability of the measurements.

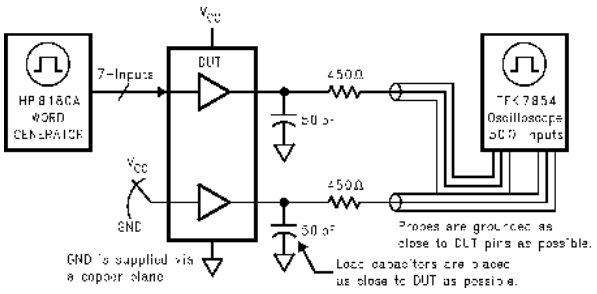

Figure 2. Simultaneous Switching Test Circuit

Physical Dimensions

Dimensions are in inches (millimeters) unless otherwise noted.

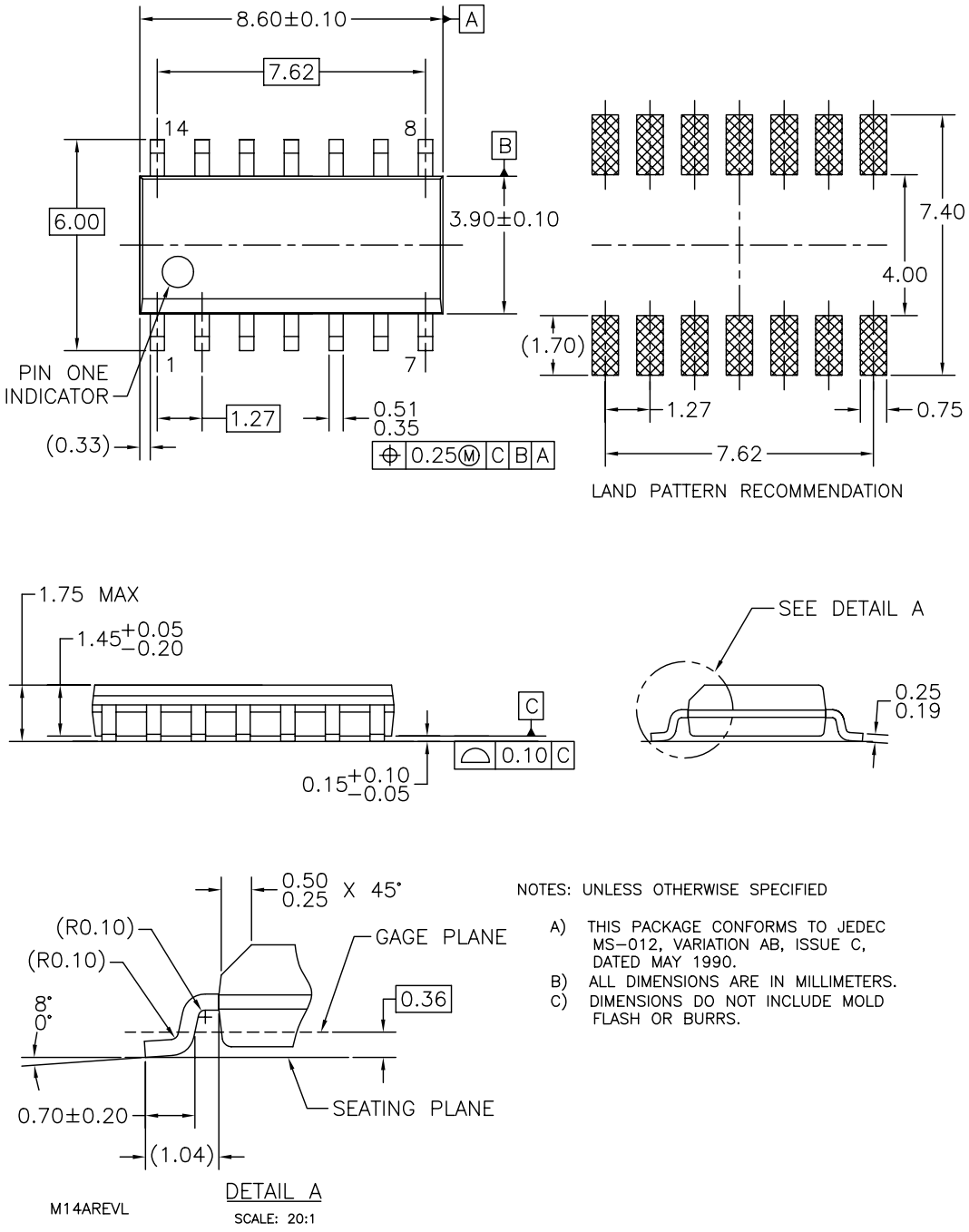

Figure 3. 14-Lead Small Outline Integrated Circuit (SOIC), JEDEC MS-012, 0.150" Narrow
Package Number M14A

Physical Dimensions (Continued)

Dimensions are in millimeters unless otherwise noted.

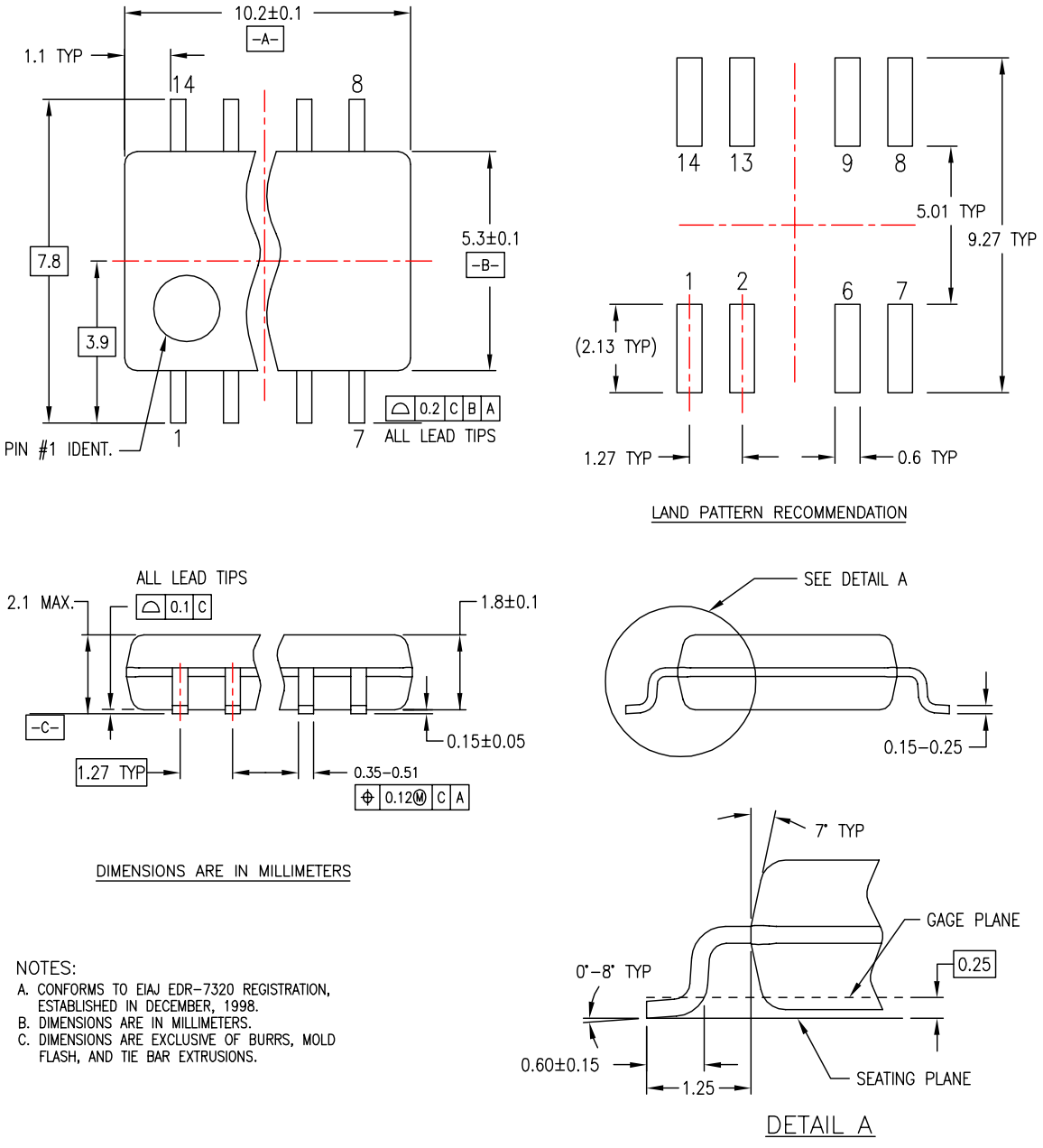

NOTES:

A. CONFORMS TO EIAJ EDR–7320 REGISTRATION, ESTABLISHED IN DECEMBER, 1998.
B. DIMENSIONS ARE IN MILLIMETERS.
C. DIMENSIONS ARE EXCLUSIVE OF BURRS, MOLD FLASH, AND TIE BAR EXTRUSIONS.

M14DREVC

Figure 4. 14-Lead Small Outline Package (SOP), EIAJ TYPE II, 5.3mm Wide
Package Number M14D

Physical Dimensions (Continued)

Dimensions are in millimeters unless otherwise noted.

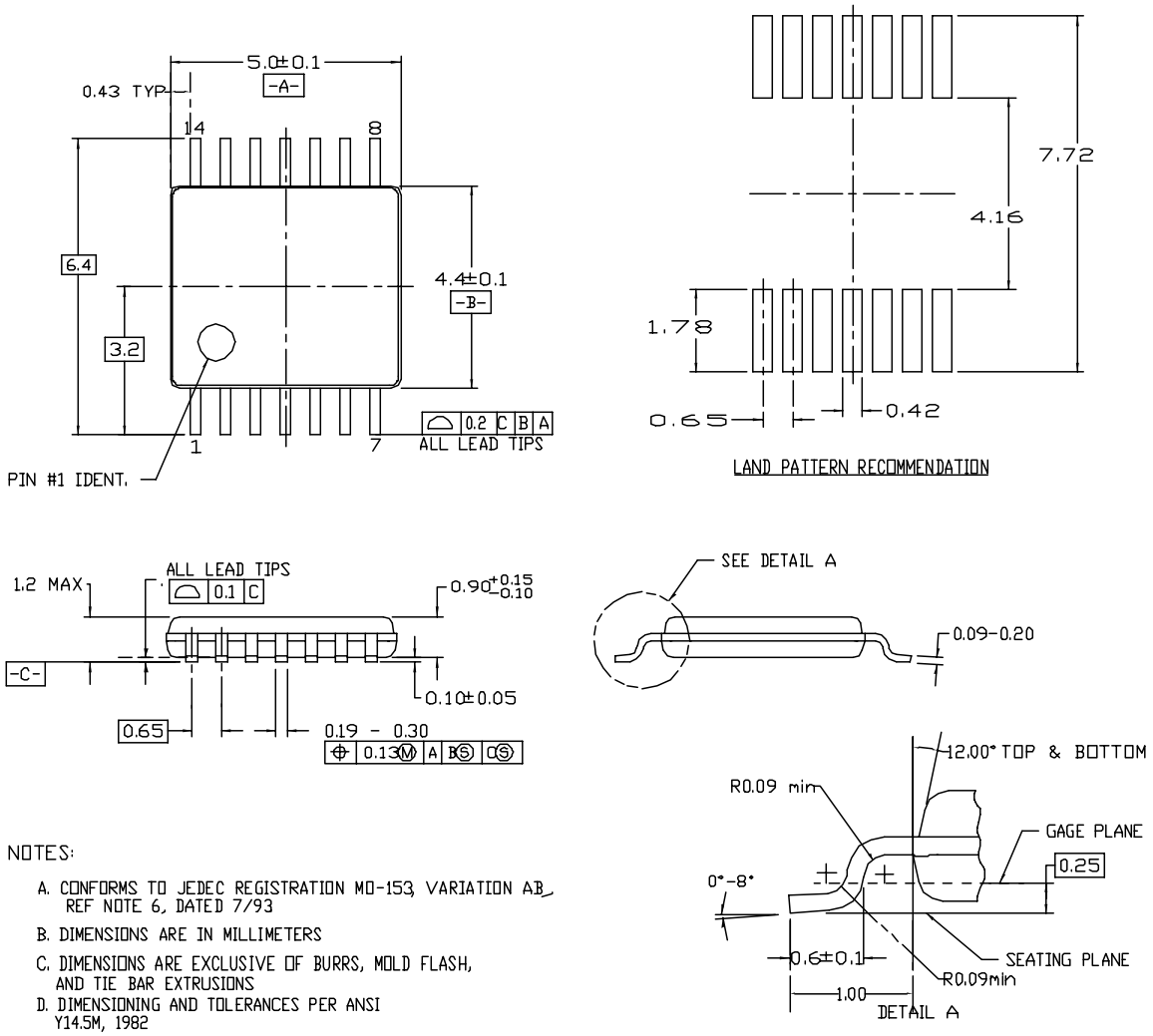

NOTES:

A. CONFORMS TO JEDEC REGISTRATION MO-153, VARIATION AB, REF NOTE 6, DATED 7/93

B. DIMENSIONS ARE IN MILLIMETERS

C. DIMENSIONS ARE EXCLUSIVE OF BURRS, MOLD FLASH, AND TIE BAR EXTRUSIONS

D. DIMENSIONING AND TOLERANCES PER ANSI Y14.5M, 1982

MTC14revD

Figure 5. 14-Lead Thin Shrink Small Outline Package (TSSOP), JEDEC MO-153, 4.4mm Wide
Package Number MTC14

FAIRCHILD SEMICONDUCTOR®

TRADEMARKS

The following are registered and unregistered trademarks Fairchild Semiconductor owns or is authorized to use and is not intended to be an exhaustive list of all such trademarks.

ACEx®
Across the board. Around the world.™
ActiveArray™
Bottomless™
Build it Now™
CoolFET™
CROSSVOLT™
CTL™
Current Transfer Logic™
DOME™
E²CMOS™
EcoSPARK®
EnSigna™
FACT Quiet Series™
FACT®
FAST®
FASTr™
FPS™
FRFET®
GlobalOptoisolator™
GTO™
HiSeC™
i-Lo™
ImpliedDisconnect™
IntelliMAX™
ISOPLANAR™
MICROCOUPLER™
MicroPak™
MICROWIRE™
Motion-SPM™
MSX™
MSXPro™
OCX™
OCXPro™
OPTOLOGIC®
OPTOPLANAR®
PACMAN™
PDP-SPM™
POP™
Power220®
Power247®
PowerEdge™
PowerSaver™
Power-SPM™
PowerTrench®
Programmable Active Droop™
QFET®
QS™
QT Optoelectronics™
Quiet Series™
RapidConfigure™
RapidConnect™
ScalarPump™
SMART START™
SPM®
STEALTH™
SuperFET™
SuperSOT™-3
SuperSOT™-6
SuperSOT™-8
SyncFET™
TCM™
The Power Franchise®
™
TinyBoost™
TinyBuck™
TinyLogic®
TINYOPTO™
TinyPower™
TinyWire™
TruTranslation™
µSerDes™
UHC®
UniFET™
VCX™
Wire™

DISCLAIMER

FAIRCHILD SEMICONDUCTOR RESERVES THE RIGHT TO MAKE CHANGES WITHOUT FURTHER NOTICE TO ANY PRODUCTS HEREIN TO IMPROVE RELIABILITY, FUNCTION OR DESIGN. FAIRCHILD DOES NOT ASSUME ANY LIABILITY ARISING OUT OF THE APPLICATION OR USE OF ANY PRODUCT OR CIRCUIT DESCRIBED HEREIN; NEITHER DOES IT CONVEY ANY LICENSE UNDER ITS PATENT RIGHTS, NOR THE RIGHTS OF OTHERS. THESE SPECIFICATIONS DO NOT EXPAND THE TERMS OF FAIRCHILD'S WORLDWIDE TERMS AND CONDITIONS, SPECIFICALLY THE WARRANTY THEREIN, WHICH COVERS THESE PRODUCTS.

LIFE SUPPORT POLICY

FAIRCHILD'S PRODUCTS ARE NOT AUTHORIZED FOR USE AS CRITICAL COMPONENTS IN LIFE SUPPORT DEVICES OR SYSTEMS WITHOUT THE EXPRESS WRITTEN APPROVAL OF FAIRCHILD SEMICONDUCTOR CORPORATION.

As used herein:

1. Life support devices or systems are devices or systems which, (a) are intended for surgical implant into the body or (b) support or sustain life, and (c) whose failure to perform when properly used in accordance with instructions for use provided in the labeling, can be reasonably expected to result in a significant injury of the user.
2. A critical component in any component of a life support, device, or system whose failure to perform can be reasonably expected to cause the failure of the life support device or system, or to affect its safety or effectiveness.

PRODUCT STATUS DEFINITIONS

Definition of Terms

Datasheet Identification	Product Status	Definition
Advance Information	Formative or In Design	This datasheet contains the design specifications for product development. Specifications may change in any manner without notice.
Preliminary	First Production	This datasheet contains preliminary data; supplementary data will be published at a later date. Fairchild Semiconductor reserves the right to make changes at any time without notice to improve design.
No Identification Needed	Full Production	This datasheet contains final specifications. Fairchild Semiconductor reserves the right to make changes at any time without notice to improve design.
Obsolete	Not In Production	This datasheet contains specifications on a product that has been discontinued by Fairchild Semiconductor. The datasheet is printed for reference information only.

Rev. I26

©1990 Fairchild Semiconductor Corporation