FAIRCHILD SEMICONDUCTOR™

March 1993
Revised July 2003

74ACTQ32
Quiet Series Quad 2-Input OR Gate

General Description

The ACTQ320 contains four, 2-input OR gates and utilizes Fairchild Quiet Series technology to guarantee quiet output switching and improved dynamic threshold performance. FACT Quiet Series™ features GTO™ output control and undershoot corrector in addition to a split ground bus for superior ACMOS performance.

Features

- I_{CC} reduced by 50%
- Guaranteed simultaneous switching noise level and dynamic threshold performance
- Improved latch-up immunity
- Minimum 4 kV ESD protection
- TTL-compatible inputs
- Outputs source/sink 24 mA

Ordering Code:

Order Number	Package Number	Package Description
74ACTQ32SC	M14A	14-Lead Small Outline Integrated Circuit (SOIC), JEDEC MS-012, 0.150" Narrow
74ACTQ32SJ	M14D	14-Lead Small Outline Package (SOP), EIAJ TYPE II, 5.3mm Wide
74ACTQ32PC	N14A	14-Lead Plastic Dual-In-Line Package (PDIP), JEDEC MS-001, 0.300" Wide

Device also available in Tape and Reel. Specify by appending suffix letter "X" to the ordering code.

Logic Symbol

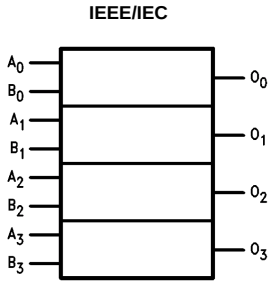

Connection Diagram

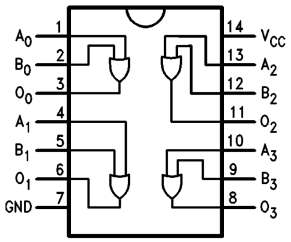

Pin Descriptions

Pin Names	Descriptions
A_n, B_n	Inputs
$\overline{O}_n$	Outputs

FACT™, FACT Quiet Series™, and GTO™ are trademarks of Fairchild Semiconductor Corporation.

© 2003 Fairchild Semiconductor Corporation

Absolute Maximum Ratings(Note 1)

Supply Voltage (V_{CC})	−0.5V to +7.0V
DC Input Diode Current (I_{IK})	
V_I = −0.5V	−20 mA
V_I = V_{CC} + 0.5V	+20 mA
DC Input Voltage (V_I)	−0.5V to V_{CC} + 0.5V
DC Output Diode Current (I_{OK})	
V_O = −0.5V	−20 mA
V_O = V_{CC} + 0.5V	+20 mA
DC Output Voltage (V_O)	−0.5V to V_{CC} + 0.5V
DC Output Source or Sink Current (I_O)	± 50 mA
DC V_{CC} or Ground Current	
per Output Pin (I_{CC} or I_{GND})	± 50 mA
Storage Temperature (T_{STG})	−65°C to +150°C
DC Latch-Up Source or Sink Current	± 300 mA
Junction Temperature (T_J) PDIP	140°C

Recommended Operating Conditions

Supply Voltage (V_{CC})	4.5V to 5.5V
Input Voltage (V_I)	0V to V_{CC}
Output Voltage (V_O)	0V to V_{CC}
Operating Temperature (T_A)	−40°C to +85°C
Minimum Input Edge Rate (ΔV/Δt)	
V_{IN} from 0.8V to 2.0V	
V_{CC} @ 4.5V, 5.5V	125 mV/ns

Note 1: Absolute maximum ratings are values beyond which damage to the device may occur. The databook specifications should be met, without exception, to ensure that the system design is reliable over its power supply, temperature, and output/input loading variables. Fairchild does not recommend operation of FACT™ circuits outside of databook specifications.

DC Electrical Characteristics

Symbol	Parameter	V_{CC} (V)	T_A = +25°C Typ	T_A = −55°C to +125°C Guaranteed Limits		T_A = −40°C to +85°C Guaranteed Limits	Units	Conditions
V_{IH}	Minimum HIGH Level Input Voltage	4.5	1.5	2.0	2.0	2.0	V	V_{OUT} = 0.1V or V_{CC} − 0.1V
		5.5	1.5	2.0	2.0	2.0		
V_{IL}	Maximum LOW Level Input Voltage	4.5	1.5	0.8	0.8	0.8	V	V_{OUT} = 0.1V or V_{CC} − 0.1V
		5.5	1.5	0.8	0.8	0.8		
V_{OH}	Minimum HIGH Level Output Voltage	4.5	4.49	4.4	4.4	4.4	V	I_{OUT} = −50 μA
		5.5	5.49	5.4	5.4	5.4		
							V	V_{IN} = V_{IL} or V_{IH}
		4.5		3.86	3.70	3.76		I_{OH} = − 24 mA
		5.5		4.86	4.70	4.76		I_{OH} = − 24 mA (Note 2)
V_{OL}	Maximum LOW Level Output Voltage	4.5	0.001	0.1	0.1	0.1	V	I_{OUT} = 50 μA
		5.5	0.001	0.1	0.1	0.1		
							V	V_{IN} = V_{IL} or V_{IH}
		4.5		0.36	0.50	0.44		I_{OL} = 24 mA
		5.5		0.36	0.50	0.44		I_{OL} = 24 mA (Note 2)
I_{IN}	Maximum Input Leakage Current	5.5		± 0.1	±1.0	± 1.0	μA	V_I = V_{CC}, GND
I_{CCT}	Maximum I_{CC}/Input	5.5	0.6		1.6	1.5	mA	V_I = V_{CC} − 2.1V
I_{OLD}	Minimum Dynamic	5.5			50	75	mA	V_{OLD} = 1.65V Max
I_{OHD}	Output Current (Note 3)	5.5			−50	−75	mA	V_{OHD} = 3.85V Min
I_{CC}	Maximum Quiescent Supply Current	5.5		2.0	40.0	20.0	μA	V_{IN} = V_{CC} or GND
V_{OLP}	Quiet Output Maximum Dynamic V_{OL}	5.0	1.1	1.5			V	Figures 1, 2 (Note 4)(Note 5)
V_{OLV}	Quiet Output Minimum Dynamic V_{OL}	5.0	−0.6	−1.2			V	Figures 1, 2 (Note 4)(Note 5)
V_{IHD}	Minimum HIGH Level Dynamic Input Voltage	5.0	1.9	2.2			V	(Note 4)(Note 6)
V_{ILD}	Maximum LOW Level Dynamic Input Voltage	5.0	1.2	0.8			V	(Note 4)(Note 6)

Note 2: All outputs loaded; thresholds on input associated with output under test.

Note 3: Maximum test duration 2.0 ms, one output loaded at a time.

Note 4: DIP Package.

Note 5: Max number of outputs defined as (n). Data inputs are 0V to 3V. One output @ GND.

Note 6: Max number of data inputs (n) switching. (n-1) inputs switching 0V to 3V (ACTQ). Input-under-test switching: 3V to threshold (V_{ILD}), 0V to threshold (V_{IHD}), f = 1 MHZ.

AC Electrical Characteristics

Symbol	Parameter	V_{CC} (V) (Note 7)	$T_A = +25°C$, $C_L = 50$ pF			$T_A = -40°C$ to $+85°C$, $C_L = 50$ pF		Units
			Min	Typ	Max	Min	Max	
t_{PLH}	Propagation Delay Data to Output	5.0	2.5	6.0	6.5	2.5	7.0	ns
t_{PHL}	Propagation Delay Data to Output	5.0	2.0	6.0	6.5	2.5	7.0	ns
t_{OSHL} t_{OSLH}	Output to Output Skew (Note 8)	5.0		0.5	1.0		1.0	ns

Note 7: Voltage Range 5.0 is 5.0V ± 0.5V.

Note 8: Skew is defined as the absolute value of the difference between the actual propagation delay for any two separate outputs of the same device. The specification applies to any outputs switching in the same direction, either HIGH-to-LOW (t_{OSHL}) or LOW-to-HIGH (t_{OSLH}). Parameter guaranteed by design.

Capacitance

Symbol	Parameter	Typ	Units	Conditions
C_{IN}	Input Capacitance	4.5	pF	V_{CC} = OPEN
C_{PD}	Power Dissipation Capacitance	68	pF	V_{CC} = 5.0V

FACT Noise Characteristics

The setup of a noise characteristics measurement is critical to the accuracy and repeatability of the tests. The following is a brief description of the setup used to measure the noise characteristics of FACT.

Equipment

Hewlett Packard Model 8180A Word Generator

PC-163A Test Fixture

Tektronics Model 7854 Oscilloscope

Procedure:

1. Verify Test Fixture Loading: Standard Load 50 pF, 500Ω.
2. Deskew the HFS generator so that no two channels have greater than 150 ps skew between them. This requires that the oscilloscope be deskewed first. It is important to deskew the HFS generator channels before testing. This will ensure that the outputs switch simultaneously.
3. Terminate all inputs and outputs to ensure proper loading of the outputs and that the input levels are at the correct voltage.
4. Set the HFS generator to toggle all but one output at a frequency of 1 MHz. Greater frequencies will increase DUT heating and effect the results of the measurement.

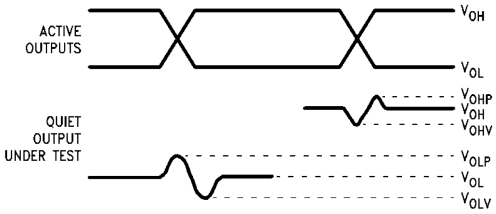

V_{OHV} and V_{OLP} are measured with respect to ground reference.

Input pulses have the following characteristics: f = 1 MHz, t_r = 3 ns, t_f = 3 ns, skew < 150 ps.

FIGURE 1. Quiet Output Noise Voltage Waveforms

5. Set the HFS generator input levels at 0V LOW and 3V HIGH for ACTQ devices and 0V LOW and 5V HIGH for AC devices. Verify levels with an oscilloscope.

V_{OLP}/V_{OLV} and V_{OHP}/V_{OHV}:

- Determine the quiet output pin that demonstrates the greatest noise levels. The worst case pin will usually be the furthest from the ground pin. Monitor the output voltages using a 50Ω coaxial cable plugged into a standard SMB type connector on the test fixture. Do not use an active FET probe.
- Measure V_{OLP} and V_{OLV} on the quiet output during the worst case transition for active and enable. Measure V_{OHP} and V_{OHV} on the quiet output during the worst case transition.
- Verify that the GND reference recorded on the oscilloscope has not drifted to ensure the accuracy and repeatability of the measurements.

V_{ILD} and V_{IHD}:

- Monitor one of the switching outputs using a 50Ω coaxial cable plugged into a standard SMB type connector on the test fixture. Do not use an active FET probe.
- First increase the input LOW voltage level, V_{IL}, until the output begins to oscillate or steps out a min of 2 ns. Oscillation is defined as noise on the output LOW level that exceeds V_{IL} limits, or on output HIGH levels that exceed V_{IH} limits. The input LOW voltage level at which oscillation occurs is defined as V_{ILD}.
- Next decrease the input HIGH voltage level, V_{IH}, until the output begins to oscillate or steps out a min of 2 ns. Oscillation is defined as noise on the output LOW level that exceeds V_{IL} limits, or on output HIGH levels that exceed V_{IH} limits. The input HIGH voltage level at which oscillation occurs is defined as V_{IHD}.
- Verify that the GND reference recorded on the oscilloscope has not drifted to ensure the accuracy and repeatability of the measurements.

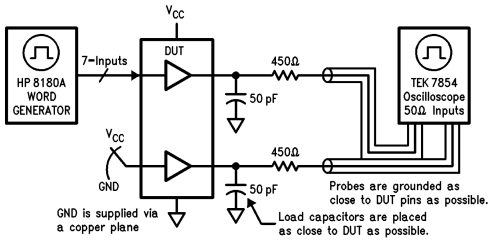

FIGURE 2. Simultaneous Switching Test Circuit

Physical Dimensions inches (millimeters) unless otherwise noted

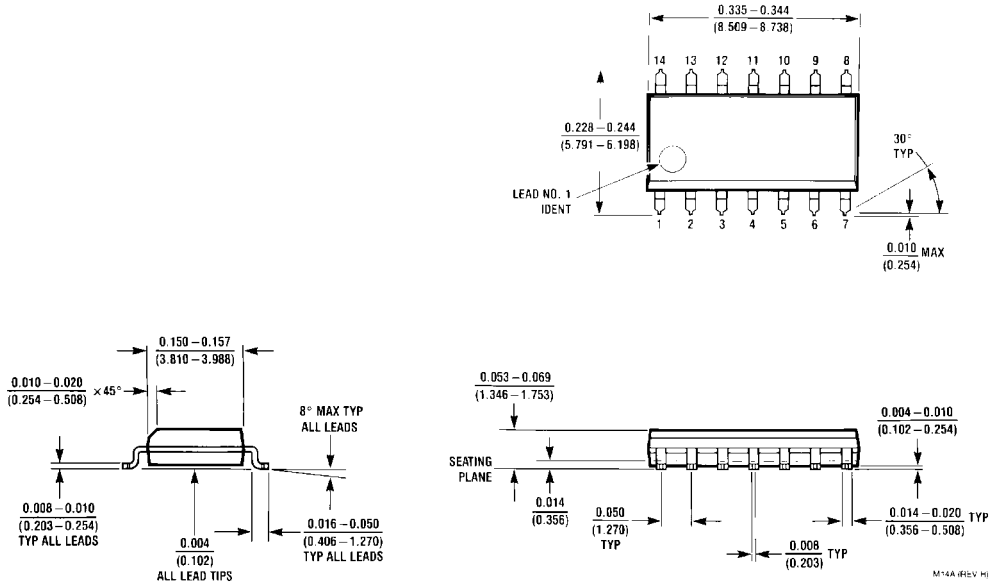

14-Lead Small Outline Integrated Circuit (SOIC), JEDEC MS-012, 0.150" Narrow
Package Number M14A

Physical Dimensions inches (millimeters) unless otherwise noted (Continued)

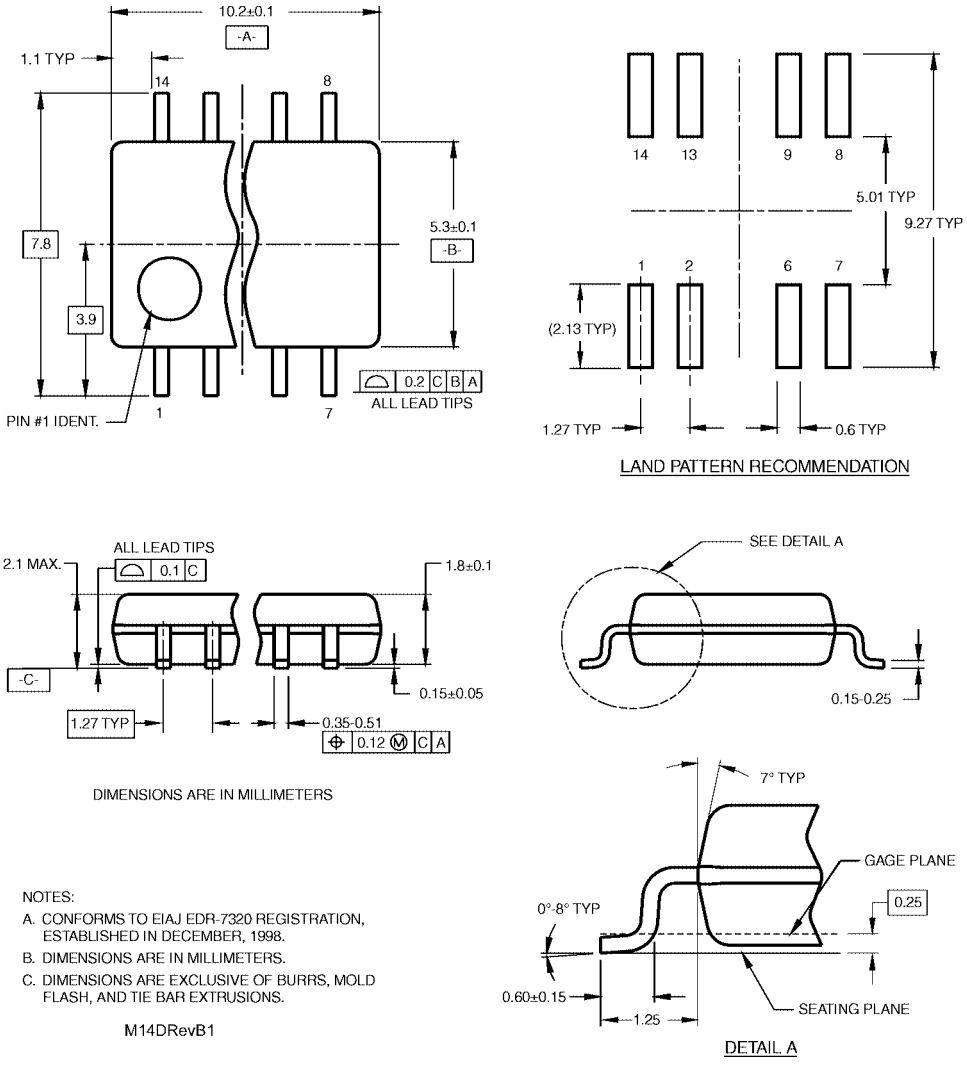

NOTES:

A. CONFORMS TO EIAJ EDR-7320 REGISTRATION, ESTABLISHED IN DECEMBER, 1998.

B. DIMENSIONS ARE IN MILLIMETERS.

C. DIMENSIONS ARE EXCLUSIVE OF BURRS, MOLD FLASH, AND TIE BAR EXTRUSIONS.

M14DRevB1

14-Lead Small Outline Package (SOP), EIAJ TYPE II, 5.3mm Wide
Package Number M14D

Physical Dimensions inches (millimeters) unless otherwise noted (Continued)

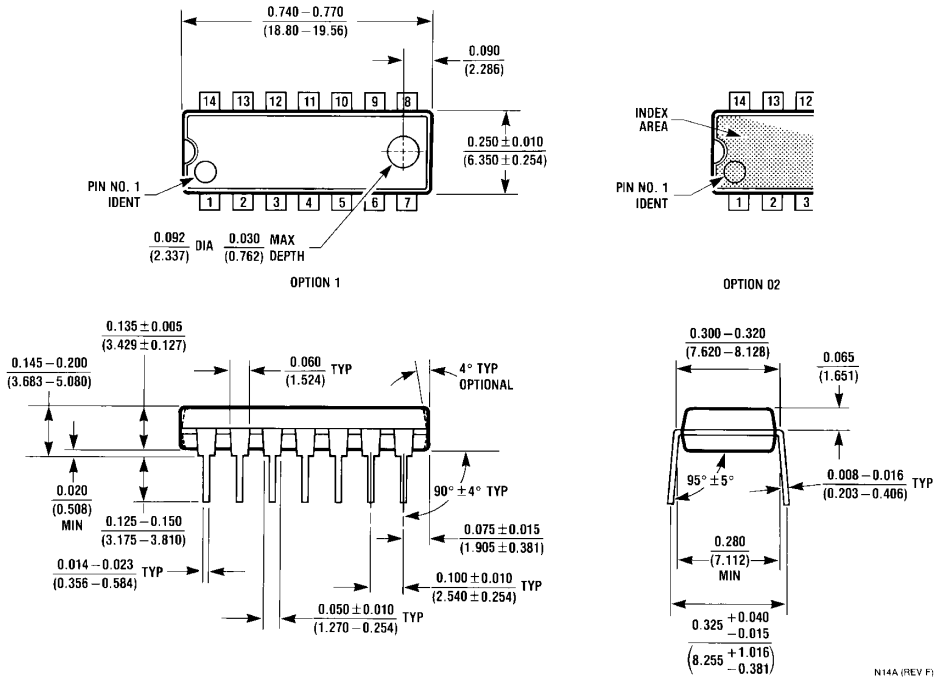

14-Lead Plastic Dual-In-Line Package (PDIP), JEDEC MS-001, 0.300" Wide
Package Number N14A

Fairchild does not assume any responsibility for use of any circuitry described, no circuit patent licenses are implied and Fairchild reserves the right at any time without notice to change said circuitry and specifications.

LIFE SUPPORT POLICY

FAIRCHILD'S PRODUCTS ARE NOT AUTHORIZED FOR USE AS CRITICAL COMPONENTS IN LIFE SUPPORT DEVICES OR SYSTEMS WITHOUT THE EXPRESS WRITTEN APPROVAL OF THE PRESIDENT OF FAIRCHILD SEMICONDUCTOR CORPORATION. As used herein:

1. Life support devices or systems are devices or systems which, (a) are intended for surgical implant into the body, or (b) support or sustain life, and (c) whose failure to perform when properly used in accordance with instructions for use provided in the labeling, can be reasonably expected to result in a significant injury to the user.
2. A critical component in any component of a life support device or system whose failure to perform can be reasonably expected to cause the failure of the life support device or system, or to affect its safety or effectiveness.

www.fairchildsemi.com