FAIRCHILD SEMICONDUCTOR™

January 1990
Revised November 1999

74ACTQ533
Quiet Series Octal Transparent Latch with 3-STATE Outputs

General Description

The ACTQ533 consists of eight latches with 3-STATE outputs for bus organized system applications. The flip-flops appear transparent to the data when Latch Enable (LE) is HIGH. When LE is LOW, the data satisfying the input timing requirements is latched. Data appears on the bus when the Output Enable (OE) is LOW. When OE is HIGH, the bus output is in the high impedance state.

The ACTQ533 utilizes Fairchild Quiet Series™ technology to guarantee quiet output switching and improve dynamic threshold performance. FACT Quiet Series features GTO™ output control and undershoot corrector in addition to a split ground bus for superior performance.

Features

- I_{CC} and I_{OZ} reduced by 50%
- Guaranteed simultaneous switching noise level and dynamic threshold performance
- Guaranteed pin-to-pin skew AC performance
- Improved latch up immunity
- Eight latches in a single package
- 3-STATE outputs drive bus lines or buffer memory address registers
- Outputs source/sink 24 mA
- Inverted version of the ACTQ373
- 4 kV minimum ESD immunity

Ordering Code:

Order Number	Package Number	Package Description
74ACTQ533SC	M20B	20-Lead Small Outline Integrated Circuit (SOIC), JEDEC MS-013, 0.300" Wide Body
74ACTQ533MTC	MTC20	20-Lead Thin Shrink Small Outline Package (TSSOP), JEDEC MO-153, 4.4mm Wide
74ACTQ533PC	N20A	20-Lead Plastic Dual-In-Line Package (PDIP), JEDEC MS-001, 0.300" Wide

Device also available in Tape and Reel. Specify by appending suffix letter "X" to the ordering code

Logic Symbols

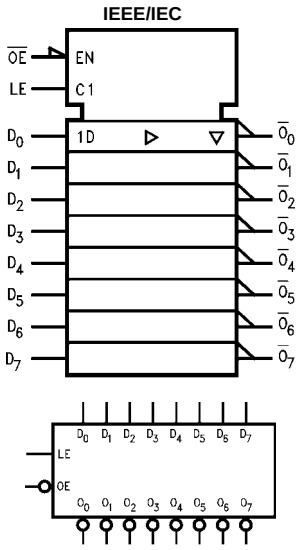

Connection Diagram

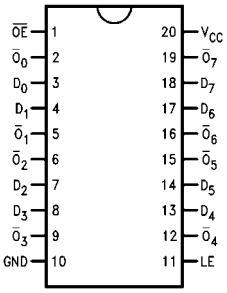

Pin Descriptions

Pin Names	Description
D_0–D_7	Data Inputs
LE	Latch Enable Input
$\overline{OE}$	Output Enable Input
$\overline{O}_0$–$\overline{O}_7$	3-STATE Latch Outputs

FACT™, FACT Quiet Series™, and GTO™ are trademarks of Fairchild Semiconductor Corporation.

© 1999 Fairchild Semiconductor Corporation

Truth Table

Inputs			Outputs
LE	$\overline{OE}$	D_n	$\overline{O}_n$
X	H	X	Z
H	L	L	H
H	L	H	L
L	L	X	$\overline{O}_0$

H = HIGH Voltage Level
L = LOW Voltage Level
Z = High Impedance
X = Immaterial
$\overline{O}_0$ = Previous $\overline{O}_0$ before HIGH-to-LOW transition of Latch Enable

Functional Description

The ACTQ533 contains eight D-type latches with 3-STATE standard outputs. When the Latch Enable (LE) input is HIGH, data on the D_n inputs enters the latches. In this condition the latches are transparent, i.e., a latch output will change state each time its D input changes. When LE is LOW, the latches store the information that was present on the D inputs at setup time preceding the HIGH-to-LOW transition of LE. The 3-STATE standard outputs are controlled by the Output Enable ($\overline{OE}$) input. When $\overline{OE}$ is LOW, the standard outputs are in the 2-state mode. When $\overline{OE}$ is HIGH, the standard outputs are in the high impedance mode but this does not interfere with entering new data into the latches.

Logic Diagram

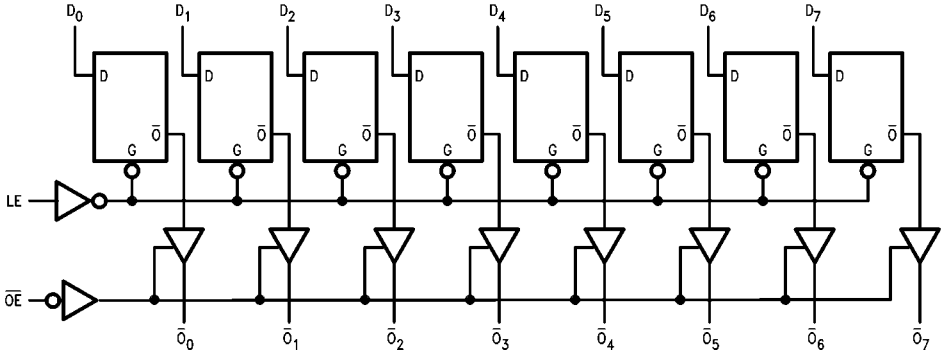

Please note that this diagram is provided only for the understanding of logic operations and should not be used to estimate propagation delays.

Absolute Maximum Ratings(Note 1)

Supply Voltage (V_{CC})	− 0.5V to + 7.0V
DC Input Diode Current (I_{IK})	
V_I = − 0.5V	− 20 mA
V_I = V_{CC} + 0.5V	+ 20 mA
DC Input Voltage (V_I)	−0.5V to V_{CC} + 0.5V
DC Output Diode Current (I_{OK})	
V_O = − 0.5V	− 20 mA
V_O = V_{CC} + 0.5V	+ 20 mA
DC Output Voltage (V_O)	− 0.5V to V_{CC} + 0.5V
DC Output Source or Sink Current (I_O)	± 50 mA
DC V_{CC} or Ground Current per Output Pin (I_{CC} or I_{GND})	± 50 mA
Storage Temperature (T_{STG})	− 65°C to + 150°C
DC Latchup Source or Sink Current	± 300 mA
Junction Temperature (T_J)	
PDIP	140°C

Recommended Operating Conditions

Supply Voltage (V_{CC})	4.5V to 5.5V
Input Voltage (V_I)	0V to V_{CC}
Output Voltage (V_O)	0V to V_{CC}
Operating Temperature (T_A)	−40°C to +85°C
Minimum Input Edge Rate ΔV/Δt	125 mV/ns
V_{IN} from 0.8V to 2.0V	
V_{CC} @ 4.5V, 5.5V	

Note 1: Absolute maximum ratings are those values beyond which damage to the device may occur. The databook specifications should be met, without exception, to ensure that the system design is reliable over its power supply, temperature, and output/input loading variables. Fairchild does not recommend operation of FACT™ circuits outside databook specifications.

DC Electrical Characteristics

Symbol	Parameter	V_{CC} (V)	T_A = +25°C Typ	T_A = −40°C to +85°C Guaranteed Limits		Units	Conditions
V_{IH}	Minimum HIGH Level Input Voltage	4.5 5.5	1.5 1.5	2.0 2.0	2.0 2.0	V	V_{OUT} = 0.1V or V_{CC} − 0.1V
V_{IL}	Maximum LOW Level Input Voltage	4.5 5.5	1.5 1.5	0.8 0.8	0.8 0.8	V	V_{OUT} = 0.1V or V_{CC} − 0.1V
V_{OH}	Minimum HIGH Level Output Voltage	4.5 5.5	4.49 5.49	4.4 5.4	4.4 5.4	V	I_{OUT} = −50 μA
		4.5 5.5		3.86 4.86	3.76 4.76	V	V_{IN} = V_{IL} or V_{IH} I_{OH} = −24 mA I_{OH} = −24 mA (Note 2)
V_{OL}	Maximum LOW Level Output Voltage	4.5 5.5	0.001 0.001	0.1 0.1	0.1 0.1	V	I_{OUT} = 50 μA
		4.5 5.5		0.36 0.36	0.44 0.44	V	V_{IN} = V_{IL} or V_{IH} I_{OL} = 24 mA I_{OL} = 24 mA (Note 2)
I_{IN}	Maximum Input Leakage Current	5.5		±0.1	±1.0	μA	V_I = V_{CC}, GND
I_{OZ}	Maximum 3-STATE Leakage Current	5.5		±0.25	±2.5	μA	V_I = V_{IL}, V_{IH} V_O = V_{CC}, GND
I_{CCT}	Maximum I_{CC}/Input	5.5	0.6		1.5	mA	V_I = V_{CC} − 2.1V
I_{OLD}	Minimum Dynamic	5.5			75	mA	V_{OLD} = 1.65V Max
I_{OHD}	Output Current (Note 3)	5.5			−75	mA	V_{OHD} = 3.85V Min
I_{CC}	Maximum Quiescent Supply Current	5.5		4.0	40.0	μA	V_{IN} = V_{CC} or GND
V_{OLP}	Quiet Output Maximum Dynamic V_{OL}	5.0	1.1	1.5		V	Figures 1, 2 (Note 4)(Note 5)
V_{OLV}	Quiet Output Minimum Dynamic V_{OL}	5.0	−0.6	−1.2		V	Figures 1, 2 (Note 4)(Note 5)
V_{IHD}	Minimum HIGH Level Dynamic Input Voltage	5.0	1.9	2.2		V	(Note 4)(Note 6)

DC Electrical Characteristics (Continued)

Symbol	Parameter	V_{CC} (V)	$T_A = +25°C$	$T_A = -40°C$ to $+85°C$		Units	Conditions
			Typ	Guaranteed Limits			
V_{ILD}	Maximum LOW Level Dynamic Input Voltage	5.0	1.2	0.8		V	(Note 4)(Note 6)

Note 2: All outputs loaded; thresholds on input associated with output under test.

Note 3: Maximum test duration 2.0 ms, one output loaded at a time.

Note 4: DIP package.

Note 5: Max number of outputs defined as (n). Data inputs are driven 0V to 3V. One output @ GND.

Note 6: Max number of data inputs (n) switching. (n–1) inputs switching 0V to 3V Input-under-test switching: 3V to threshold (V_{ILD}), 0V to threshold (V_{IHD}), f = 1 MHz.

AC Electrical Characteristics

Symbol	Parameter	V_{CC} (V) (Note 7)	$T_A = +25°C$, $C_L = 50$ pF			$T_A = -40°C$ to $+85°C$, $C_L = 50$ pF		Units
			Min	Typ	Max	Min	Max	
t_{PHL} t_{PLH}	Propagation Delay D_n to O_n	5.0	2.0	6.0	8.0	2.0	8.5	ns
t_{PHL} t_{PLH}	Propagation Delay LE to O_n	5.0	2.5	7.0	9.0	2.5	9.5	ns
t_{PZL}, t_{PZH}	Output Enable Time	5.0	2.0	7.0	9.0	2.0	9.5	ns
t_{PHZ}, t_{PLZ}	Output Disable Time	5.0	1.0	8.0	10.0	1.0	10.5	ns
t_{OSHL} t_{OSLH}	Output to Output Skew D_n to O_n(Note 8)	5.0		0.5	1.0		1.0	ns

Note 7: Voltage Range 5.0 is 5.0V ± 0.5V.

Note 8: Skew is defined as the absolute value of the difference between the actual propagation delay for any two separate outputs of the same device. The specification applies to any outputs switching in the same direction, either HIGH-to-LOW (t_{OSHL}) or LOW-to-HIGH (t_{OSLH}). Parameter guaranteed by design.

AC Operating Requirements

Symbol	Parameter	V_{CC} (V) (Note 9)	$T_A = +25°C$, $C_L = 50$ pF		$T_A = -40°C$ to $+85°C$, $C_L = 50$ pF	Units
			Typ	Guaranteed Minimum		
t_S	Setup Time, HIGH or LOW D_n to LE	5.0	0	3.0	3.0	ns
t_H	Hold Time, HIGH or LOW D_n to LE	5.0	0	1.5	1.5	ns
t_W	LE Pulse Width, HIGH	5.0	2.0	4.0	4.0	ns

Note 9: Voltage Range 5.0 is 5.0V ± 0.5V.

Capacitance

Symbol	Parameter	Typ	Units	Conditions
C_{IN}	Input Capacitance	4.5	pF	V_{CC} = OPEN
C_{PD}	Power Dissipation Capacitance	40	pF	V_{CC} = 5.0V

FACT Noise Characteristics

The setup of a noise characteristics measurement is critical to the accuracy and repeatability of the tests. The following is a brief description of the setup used to measure the noise characteristics of FACT.

Equipment:

Hewlett Packard Model 8180A Word Generator

PC-163A Test Fixture Tektronics Model 7854 Oscilloscope

Procedure:

1. Verify Test Fixture Loading: Standard Load 50 pF, 500Ω.
2. Deskew the HFS generator so that no two channels have greater than 150 ps skew between them. This requires that the oscilloscope be deskewed first. It is important to deskew the HFS generator channels before testing. This will ensure that the outputs switch simultaneously.
3. Terminate all inputs and outputs to ensure proper loading of the outputs and that the input levels are at the correct voltage.
4. Set the HFS generator to toggle all but one output at a frequency of 1 MHz. Greater frequencies will increase DUT heating and effect the results of the measurement.
5. Set the HFS generator input levels at 0V LOW and 3V HIGH for ACT devices and 0V LOW and 5V HIGH for AC devices. Verify levels with a digital volt meter.

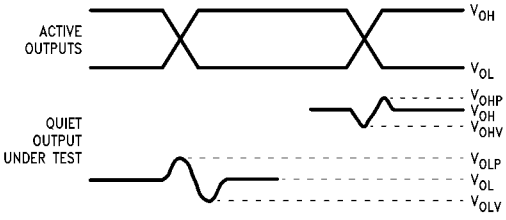

FIGURE 1. Quiet Output Noise Voltage Waveforms

Note 10: V_{OHV} and V_{OLP} are measured with respect to ground reference.

Note 11: Input pulses have the following characteristics:

f = 1 MHz, t_r = 3 ns, t_f = 3 ns, skew < 150 ps.

V_{OLP}/V_{OLV} and V_{OHP}/V_{OHV}:

- Determine the quiet output pin that demonstrates the greatest noise levels. The worst case pin will usually be the furthest from the ground pin. Monitor the output voltages using a 50Ω coaxial cable plugged into a standard SMB type connector on the test fixture. Do not use an active FET probe.
- Measure V_{OLP} and V_{OLV} on the quiet output during the worst case transition for active and enable. Measure V_{OHP} and V_{OHV} on the quiet output during the worst case active and enable transition.
- Verify that the GND reference recorded on the oscilloscope has not drifted to ensure the accuracy and repeatability of the measurements.

V_{ILD} and V_{IHD}:

- Monitor one of the switching outputs using a 50Ω coaxial cable plugged into a standard SMB type connector on the test fixture. Do not use an active FET probe.
- First increase the input LOW voltage level, V_{IL}, until the output begins to oscillate or steps out a min of 2 ns. Oscillation is defined as noise on the output LOW level that exceeds V_{IL} limits, or on output HIGH levels that exceed V_{IH} limits. The input LOW voltage level at which oscillation occurs is defined as V_{ILD}.
- Next decrease the input HIGH voltage level on the V_{IH} until the output begins to oscillate or steps out a min of 2 ns. Oscillation is defined as noise on the output LOW level that exceeds V_{IL} limits, or on output HIGH levels that exceed V_{IH} limits. The input HIGH voltage level at which oscillation occurs is defined as V_{IHD}.
- Verify that the GND reference recorded on the oscilloscope has not drifted to ensure the accuracy and repeatability of the measurements.

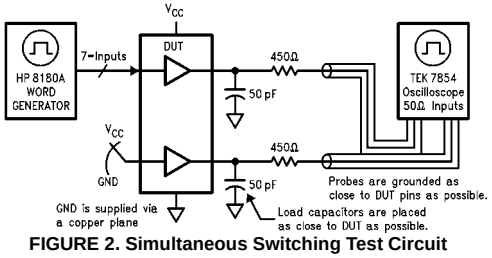

FIGURE 2. Simultaneous Switching Test Circuit

Physical Dimensions inches (millimeters) unless otherwise noted

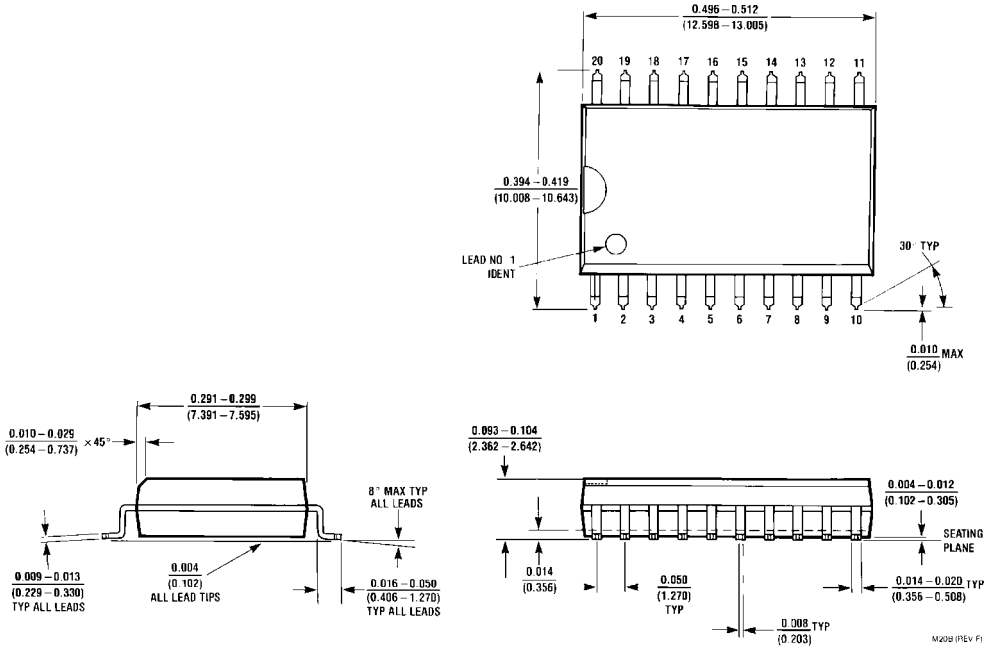

20-Lead Small Outline Integrated Circuit (SOIC), JEDEC MS-013, 0.300” Wide Body
Package Number M20B

Physical Dimensions inches (millimeters) unless otherwise noted (Continued)

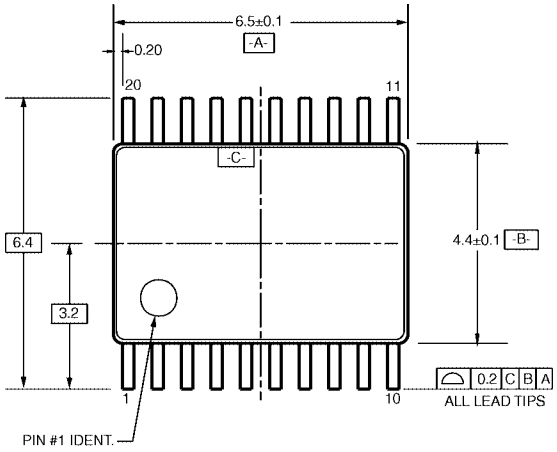

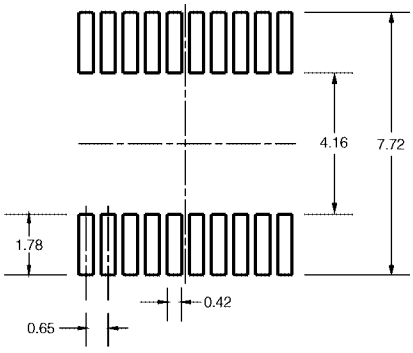

LAND PATTERN RECOMMENDATION

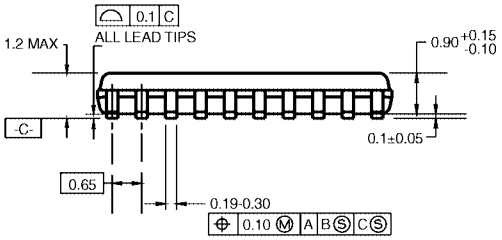

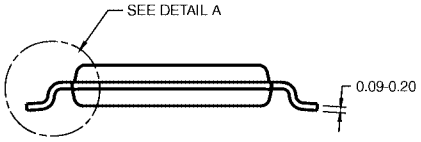

DIMENSIONS ARE IN MILLIMETERS

NOTES:

A. CONFORMS TO JEDEC REGISTRATION MO-153, VARIATION AC, REF NOTE 6, DATE 7/93.

B. DIMENSIONS ARE IN MILLIMETERS.

C. DIMENSIONS ARE EXCLUSIVE OF BURRS, MOLD FLASH, AND TIE BAR EXTRUSIONS.

D. DIMENSIONS AND TOLERANCES PER ANSI Y14.5M, 1982.

MTC20RevD1

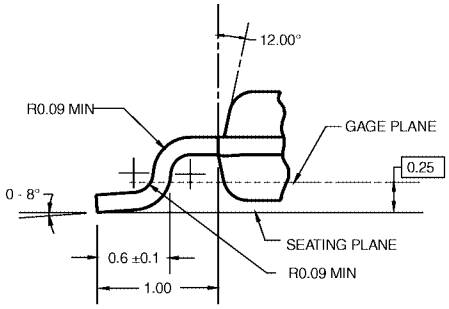

DETAIL A

20-Lead Thin Shrink Small Outline Package (TSSOP), JEDEC MO-153, 4.4mm
Package Number MTC20

Physical Dimensions inches (millimeters) unless otherwise noted (Continued)

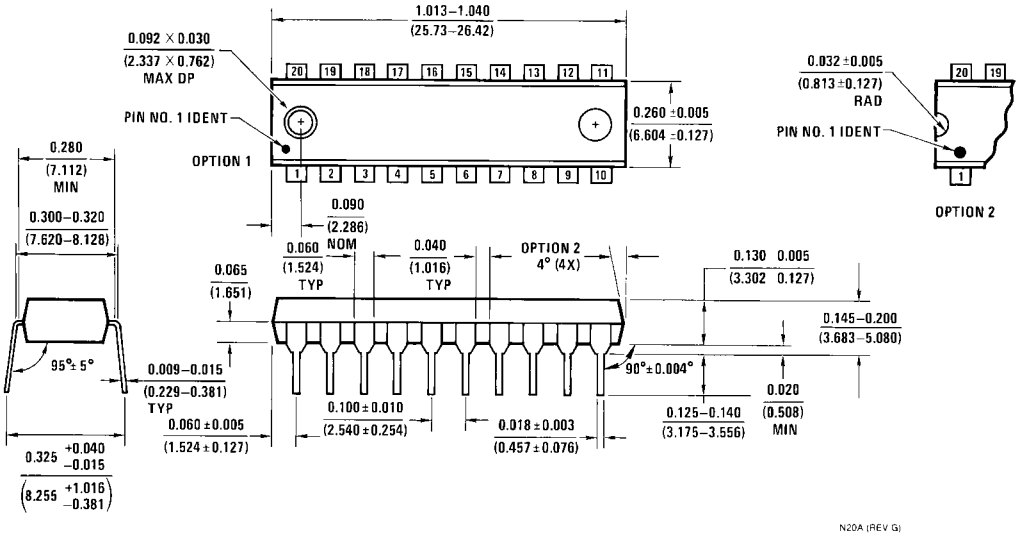

20-Lead Plastic Dual-In-Line Package (PDIP), JEDEC MS-001, 0.300" Wide
Package Number N20A

Fairchild does not assume any responsibility for use of any circuitry described, no circuit patent licenses are implied and Fairchild reserves the right at any time without notice to change said circuitry and specifications.

LIFE SUPPORT POLICY

FAIRCHILD'S PRODUCTS ARE NOT AUTHORIZED FOR USE AS CRITICAL COMPONENTS IN LIFE SUPPORT DEVICES OR SYSTEMS WITHOUT THE EXPRESS WRITTEN APPROVAL OF THE PRESIDENT OF FAIRCHILD SEMICONDUCTOR CORPORATION. As used herein:

1. Life support devices or systems are devices or systems which, (a) are intended for surgical implant into the body, or (b) support or sustain life, and (c) whose failure to perform when properly used in accordance with instructions for use provided in the labeling, can be reasonably expected to result in a significant injury to the user.
2. A critical component in any component of a life support device or system whose failure to perform can be reasonably expected to cause the failure of the life support device or system, or to affect its safety or effectiveness.

www.fairchildsemi.com