74LCX157

LOW VOLTAGE CMOS QUAD 2 CHANNEL MULTIPLEXER WITH 5V TOLERANT INPUTS

- 5V TOLERANT INPUTS
- HIGH SPEED :
  t_{PD} = 6.0ns (MAX.) at V_{CC} = 3V
- POWER DOWN PROTECTION ON INPUTS AND OUTPUTS
- SYMMETRICAL OUTPUT IMPEDANCE:
  $|I_{OH}| = I_{OL}$ = 24mA (MIN) at V_{CC} = 3V
- PCI BUS LEVELS GUARANTEED AT 24 mA
- BALANCED PROPAGATION DELAYS:
  $t_{PLH} \cong t_{PHL}$
- OPERATING VOLTAGE RANGE:
  V_{CC}(OPR) = 2.0V to 3.6V (1.5V Data Retention)
- PIN AND FUNCTION COMPATIBLE WITH 74 SERIES 157
- LATCH-UP PERFORMANCE EXCEEDS 500mA (JESD 17)
- ESD PERFORMANCE:
  HBM > 2000V (MIL STD 883 method 3015);
  MM > 200V

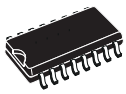

SOP



TSSOP

ORDER CODES

PACKAGE	TUBE	T & R
SOP	74LCX157M	74LCX157MTR
TSSOP		74LCX157TTR

DESCRIPTION

The 74LCX157 is a low voltage CMOS QUAD 2 CHANNEL MULTIPLEXER fabricated with sub-micron silicon gate and double-layer metal wiring C^2MOS technology. It is ideal for low power and high speed 3.3V applications; it can be interfaced to 5V signal environment for inputs.

It consists of four 2-input digital multiplexer with common select and strobe inputs. It is a non-inverting multiplexer. When the $\overline{\text{STROBE}}$ input is held high selection of data is inhibited and all the outputs become low. The SELECT decoding determines whether the A or B inputs get routed to their corresponding Y outputs.
It has same speed performance at 3.3V than 5V AC/ACT family, combined with a lower power consumption.
All inputs and outputs are equipped with protection circuits against static discharge, giving them 2KV ESD immunity and transient excess voltage.

PIN CONNECTION AND IEC LOGIC SYMBOLS

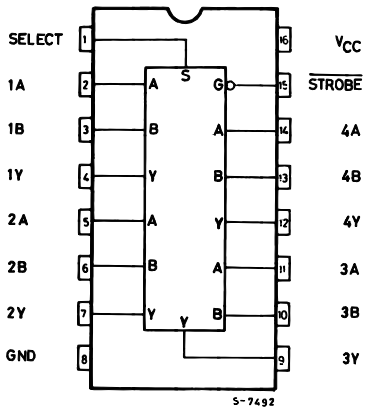

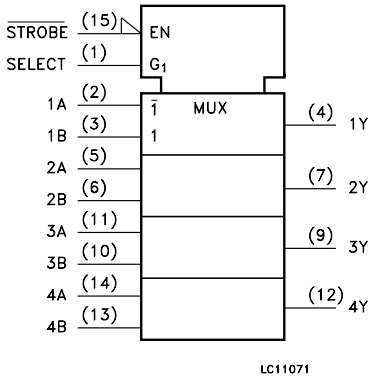

INPUT AND OUTPUT EQUIVALENT CIRCUIT

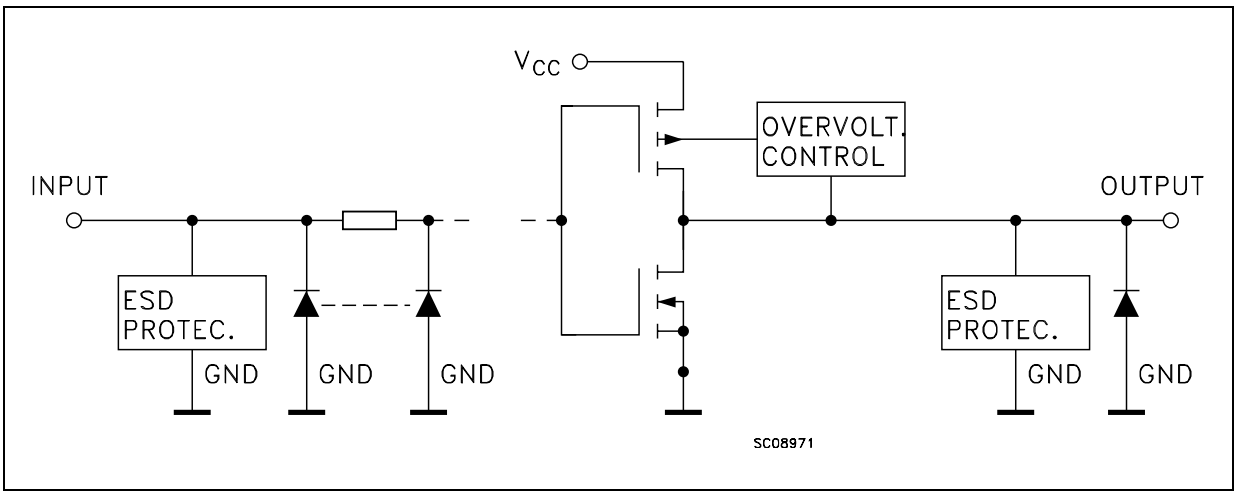

PIN DESCRIPTION

PIN No	SYMBOL	NAME AND FUNCTION
1	SELECT	Common Data Select Inputs
2, 5, 11, 14	1A to 4A	Data Inputs From Source A
3, 6, 10, 13	1B to 4B	Data Inputs From Source B
4, 7, 9, 12	1Y to 4Y	Multiplexer Outputs
15	$\overline{\text{STROBE}}$	Strobe Input
8	GND	Ground (0V)
16	V_{CC}	Positive Supply Voltage

TRUTH TABLE

INPUTS				OUTPUT
$\overline{\text{STROBE}}$	SELECT	A	B	Y
H	X	X	X	L
L	L	L	X	L
L	L	H	X	H
L	H	X	L	L
L	H	X	H	H

X : Don't Care

LOGIC DIAGRAM

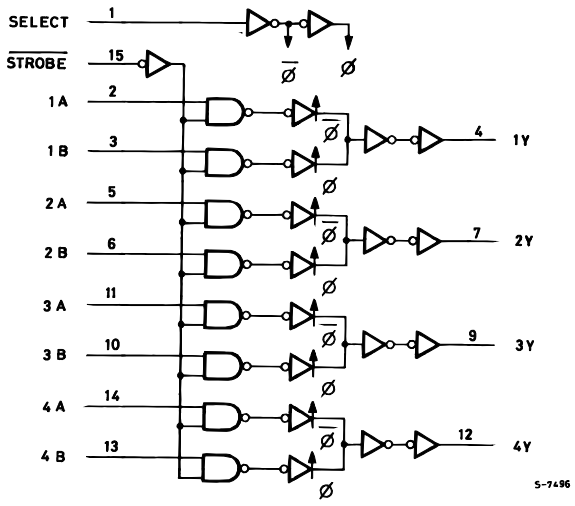

This logic diagram has not be used to estimate propagation delays

ABSOLUTE MAXIMUM RATINGS

Symbol	Parameter	Value	Unit
V_{CC}	Supply Voltage	-0.5 to +7.0	V
V_I	DC Input Voltage	-0.5 to +7.0	V
V_O	DC Output Voltage (V_{CC} = 0V)	-0.5 to +7.0	V
V_O	DC Output Voltage (High or Low State) (note 1)	-0.5 to V_{CC} + 0.5	V
I_{IK}	DC Input Diode Current	- 50	mA
I_{OK}	DC Output Diode Current (note 2)	- 50	mA
I_O	DC Output Current	± 50	mA
I_{CC}	DC Supply Current per Supply Pin	± 100	mA
I_{GND}	DC Ground Current per Supply Pin	± 100	mA
T_{stg}	Storage Temperature	-65 to +150	°C
T_L	Lead Temperature (10 sec)	300	°C

Absolute Maximum Ratings are those values beyond which damage to the device may occur. Functional operation under these conditions is not implied
1) I_O absolute maximum rating must be observed
2) V_O < GND

RECOMMENDED OPERATING CONDITIONS

Symbol	Parameter	Value	Unit
V_{CC}	Supply Voltage (note 1)	2.0 to 3.6	V
V_I	Input Voltage	0 to 5.5	V
V_O	Output Voltage (V_{CC} = 0V)	0 to 5.5	V
V_O	Output Voltage (High or Low State)	0 to V_{CC}	V
I_{OH}, I_{OL}	High or Low Level Output Current (V_{CC} = 3.0 to 3.6V)	± 24	mA
I_{OH}, I_{OL}	High or Low Level Output Current (V_{CC} = 2.7V)	± 12	mA
T_{op}	Operating Temperature	-55 to 125	°C
dt/dv	Input Rise and Fall Time (note 2)	0 to 10	ns/V

1) Truth Table guaranteed: 1.5V to 3.6V
2) V_{IN} from 0.8V to 2V at V_{CC} = 3.0V

DC SPECIFICATIONS

Symbol	Parameter	Test Condition		Value				Unit
		V_{CC} (V)		-40 to 85 °C		-55 to 125 °C		
				Min.	Max.	Min.	Max.	
V_{IH}	High Level Input Voltage	2.7 to 3.6		2.0		2.0		V
V_{IL}	Low Level Input Voltage				0.8		0.8	V
V_{OH}	High Level Output Voltage	2.7 to 3.6	I_O=-100 µA	V_{CC}-0.2		V_{CC}-0.2		V
		2.7	I_O=-12 mA	2.2		2.2		
		3.0	I_O=-18 mA	2.4		2.4		
			I_O=-24 mA	2.2		2.2		
V_{OL}	Low Level Output Voltage	2.7 to 3.6	I_O=100 µA		0.2		0.2	V
		2.7	I_O=12 mA		0.4		0.4	
		3.0	I_O=16 mA		0.4		0.4	
			I_O=24 mA		0.55		0.55	
I_I	Input Leakage Current	2.7 to 3.6	V_I = 0 to 5.5V		± 5		± 5	µA
I_{off}	Power Off Leakage Current	0	V_I or V_O = 5.5V		10		10	µA
I_{CC}	Quiescent Supply Current	2.7 to 3.6	V_I = V_{CC} or GND		10		10	µA
			V_I or V_O= 3.6 to 5.5V		± 10		± 10	
ΔI_{CC}	I_{CC} incr. per Input	2.7 to 3.6	V_{IH} = V_{CC} - 0.6V		500		500	µA

DYNAMIC SWITCHING CHARACTERISTICS

Symbol	Parameter	Test Condition		Value			Unit
		V_{CC} (V)		T_A = 25 °C			
				Min.	Typ.	Max.	
V_{OLP}	Dynamic Low Level Quiet Output (note 1)	3.3	C_L = 50pF, V_{IL} = 0V, V_{IH} = 3.3V		0.8		V
V_{OLV}					-0.8		

1) Number of outputs defined as "n". Measured with "n-1" outputs switching from HIGH to LOW or LOW to HIGH. The remaining output is measured in the LOW state.

AC ELECTRICAL CHARACTERISTICS

Symbol	Parameter	Test Condition				Value				Unit
		V_{CC} (V)	C_L (pF)	R_L (Ω)	$t_s = t_r$ (ns)	-40 to 85 °C		-55 to 125 °C		
						Min.	Max.	Min.	Max.	
t_{PLH} t_{PHL}	Propagation Delay Time A, B to Y	2.7	50	500	2.5		6.5		7.5	ns
		3.0 to 3.6				1.5	6.0		6.9	
t_{PLH} t_{PHL}	Propagation Delay Time SELECT to Y	2.7	50	500	2.5		8.0		9.2	ns
		3.0 to 3.6				1.5	7.0		8.0	
t_{PLH} t_{PHL}	Propagation Delay Time STROBE to Y	2.7	50	500	2.5		8.0		9.2	ns
		3.0 to 3.6				1.5	7.0		8.0	
t_{OSLH} t_{OSHL}	Output To Output Skew Time (note1, 2)	3.0 to 3.6	50	500	2.5		1.0		1.0	ns

1) Skew is defined as the absolute value of the difference between the actual propagation delay for any two outputs of the same device switching in the same direction, either HIGH or LOW ($t_{OSLH} = |t_{PLHm} - t_{PLHn}|$, $t_{OSHL} = |t_{PHLm} - t_{PHLn}|$)
2) Parameter guaranteed by design

CAPACITIVE CHARACTERISTICS

Symbol	Parameter	Test Condition		Value			Unit
		V_{CC} (V)		T_A = 25 °C			
				Min.	Typ.	Max.	
C_{IN}	Input Capacitance	3.3	V_{IN} = 0 to V_{CC}		6		pF
C_{PD}	Power Dissipation Capacitance (note 1)	3.3	f_{IN} = 10MHz V_{IN} = 0 or V_{CC}		25		pF

1) C_{PD} is defined as the value of the IC's internal equivalent capacitance which is calculated from the operating current consumption without load. (Refer to Test Circuit). Average operating current can be obtained by the following equation. $I_{CC(opr)} = C_{PD} \times V_{CC} \times f_{IN} + I_{CC}/4$ (per channel)

TEST CIRCUIT

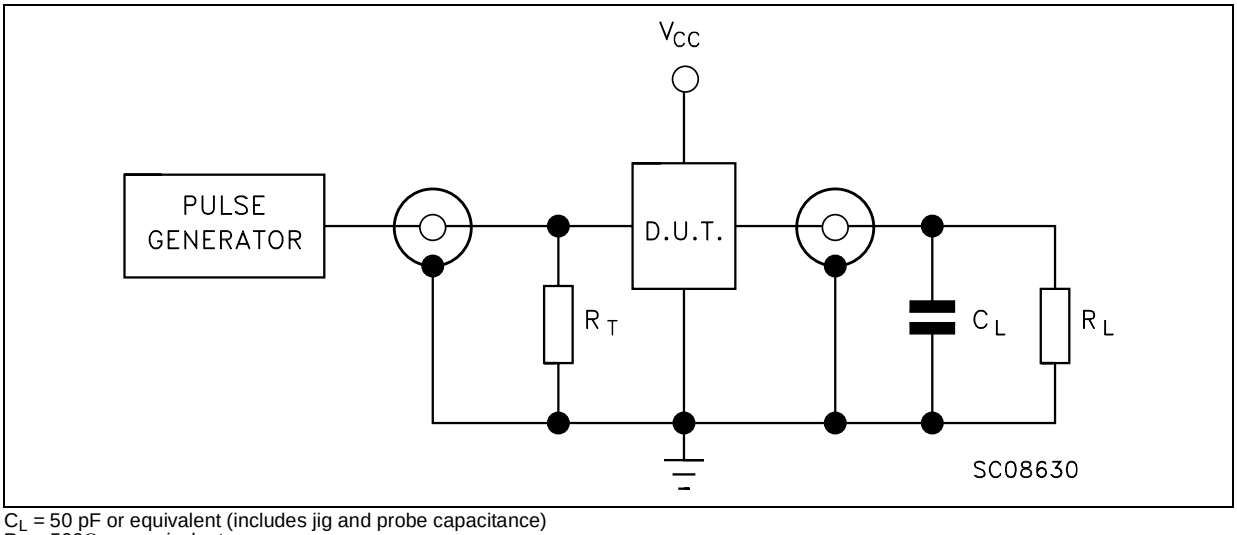

C_L = 50 pF or equivalent (includes jig and probe capacitance)
R_L = 500Ω or equivalent
R_T = Z_{OUT} of pulse generator (typically 50Ω)

WAVEFORM 1 : PROPAGATION DELAYS FOR INVERTING OUTPUTS (f=1MHz; 50% duty cycle)

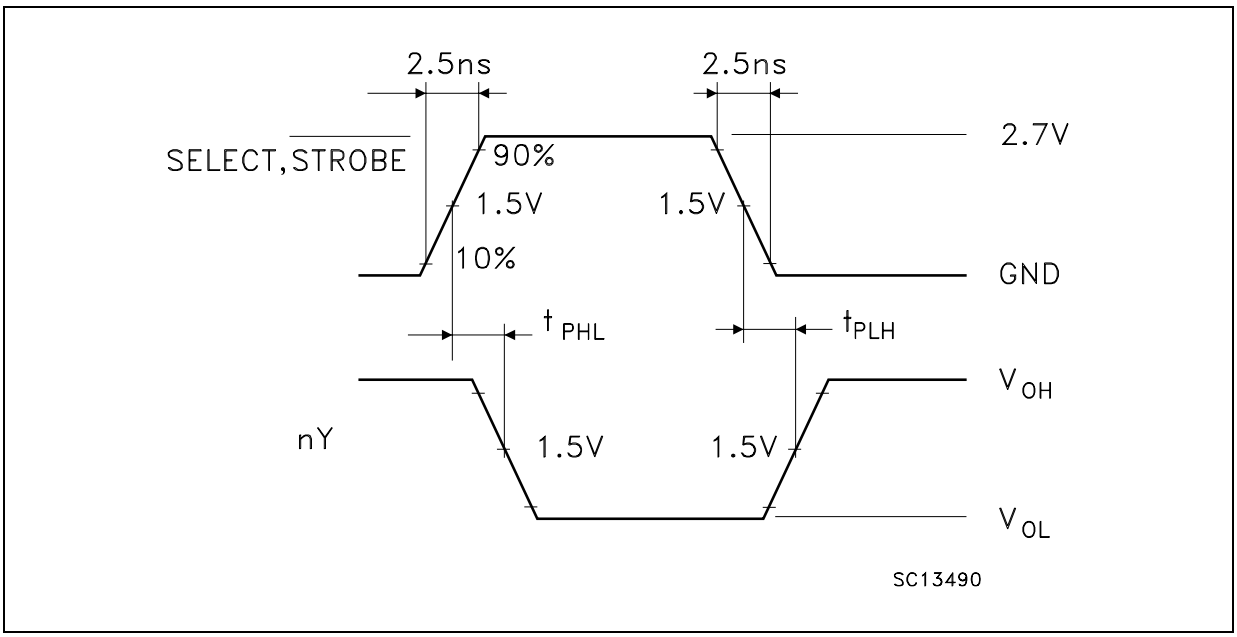

WAVEFORM 2 : PROPAGATION DELAYS FOR NON-INVERTING OUTPUTS (f=1MHz; 50% duty cycle)

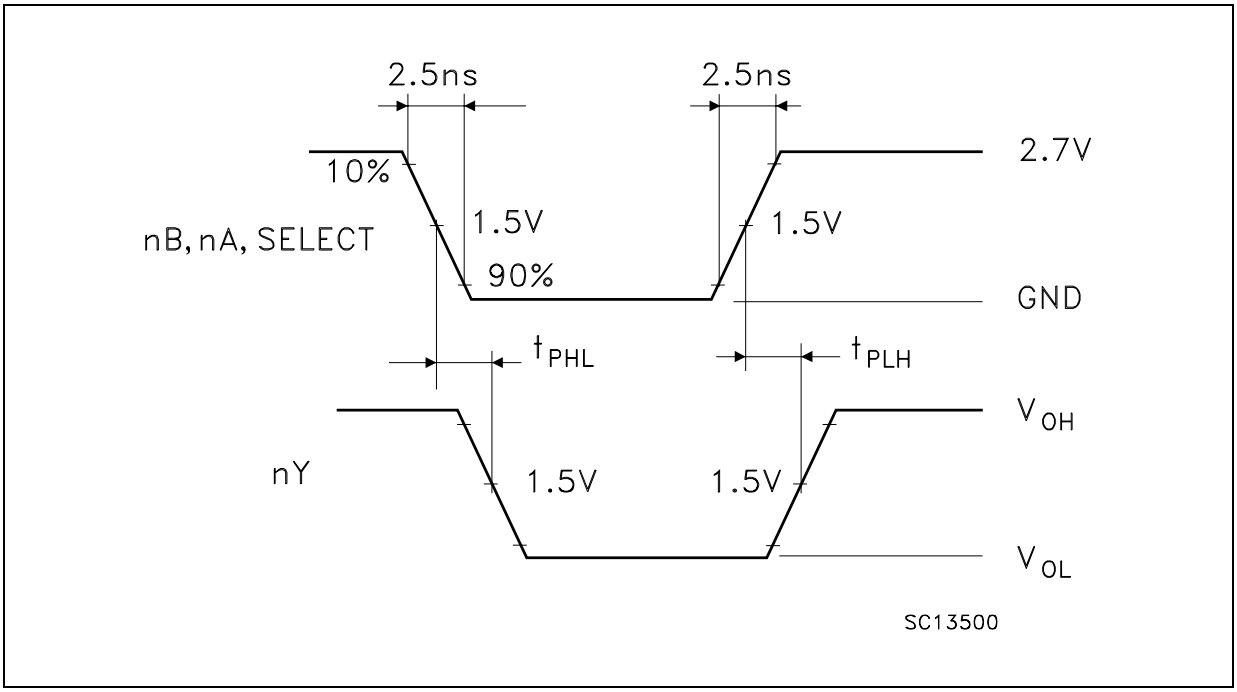

SO-16 MECHANICAL DATA

DIM.	mm.			inch		
	MIN.	TYP	MAX.	MIN.	TYP.	MAX.
A			1.75			0.068
a1	0.1		0.2	0.003		0.007
a2			1.65			0.064
b	0.35		0.46	0.013		0.018
b1	0.19		0.25	0.007		0.010
C		0.5			0.019	
c1	45° (typ.)					
D	9.8		10	0.385		0.393
E	5.8		6.2	0.228		0.244
e		1.27			0.050	
e3		8.89			0.350	
F	3.8		4.0	0.149		0.157
G	4.6		5.3	0.181		0.208
L	0.5		1.27	0.019		0.050
M			0.62			0.024
S	8° (max.)					

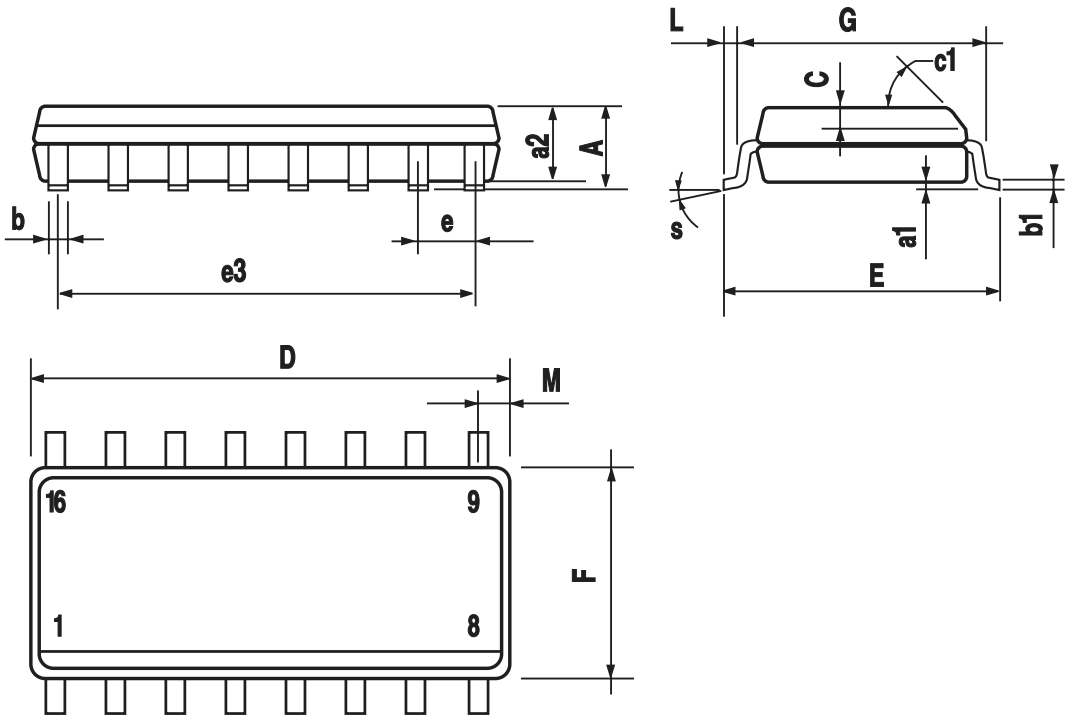

PO13H

TSSOP16 MECHANICAL DATA

DIM.	mm.			inch		
	MIN.	TYP	MAX.	MIN.	TYP.	MAX.
A			1.2			0.047
A1	0.05		0.15	0.002	0.004	0.006
A2	0.8	1	1.05	0.031	0.039	0.041
b	0.19		0.30	0.007		0.012
c	0.09		0.20	0.004		0.0089
D	4.9	5	5.1	0.193	0.197	0.201
E	6.2	6.4	6.6	0.244	0.252	0.260
E1	4.3	4.4	4.48	0.169	0.173	0.176
e		0.65 BSC			0.0256 BSC	
K	0°		8°	0°		8°
L	0.45	0.60	0.75	0.018	0.024	0.030

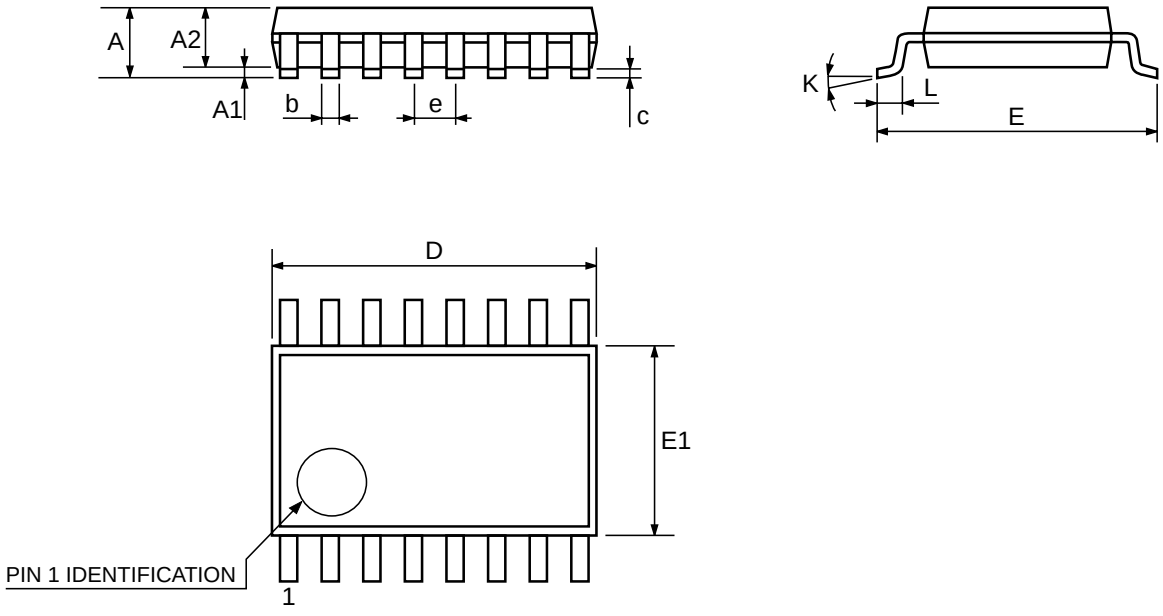

Information furnished is believed to be accurate and reliable. However, STMicroelectronics assumes no responsibility for the consequences of use of such information nor for any infringement of patents or other rights of third parties which may result from its use. No license is granted by implication or otherwise under any patent or patent rights of STMicroelectronics. Specifications mentioned in this publication are subject to change without notice. This publication supersedes and replaces all information previously supplied. STMicroelectronics products are not authorized for use as critical components in life support devices or systems without express written approval of STMicroelectronics.

© The ST logo is a registered trademark of STMicroelectronics

© 2000 STMicroelectronics - Printed in Italy - All Rights Reserved
STMicroelectronics GROUP OF COMPANIES
Australia - Brazil - China - Finland - France - Germany - Hong Kong - India - Italy - Japan - Malaysia - Malta - Morocco
Singapore - Spain - Sweden - Switzerland - United Kingdom
© http://www.st.com