74VHCT257A

QUAD 2 CHANNEL MULTIPLEXER (3-STATE)

- HIGH SPEED: t_{PD} = 4.8 ns (TYP.) at V_{CC} = 5V
- LOW POWER DISSIPATION: I_{CC} = 4 µA (MAX.) at T_A=25°C
- COMPATIBLE WITH TTL OUTPUTS: V_{IH} = 2V (MIN.), V_{IL} = 0.8V (MAX)
- POWER DOWN PROTECTION ON INPUTS & OUTPUTS
- SYMMETRICAL OUTPUT IMPEDANCE: $|I_{OH}| = I_{OL}$ = 8 mA (MIN)
- BALANCED PROPAGATION DELAYS: $t_{PLH} \cong t_{PHL}$
- OPERATING VOLTAGE RANGE: V_{CC}(OPR) = 4.5V to 5.5V
- PIN AND FUNCTION COMPATIBLE WITH 74 SERIES 257
- IMPROVED LATCH-UP IMMUNITY
- LOW NOISE: V_{OLP} = 0.8V (MAX.)

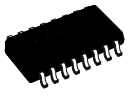

SOP



TSSOP

Table 1: Order Codes

PACKAGE	T & R
SOP	74VHCT257AMTR
TSSOP	74VHCT257ATTR

DESCRIPTION

The 74VHCT257A is an advanced high-speed CMOS QUAD 2-CHANNEL MULTIPLEXER (3-STATE) fabricated with sub-micron silicon gate and double-layer metal wiring C^2MOS technology. It is composed of four independent 2-channel multiplexers with common SELECT and ENABLE INPUT($\overline{OE}$). The VHCT257A is a non-inverting multiplexer. When the ENABLE INPUT is held "High", all outputs become high impedance state.

If SELECT INPUT is held "Low", "A" data is selected, when SELECT INPUT is "High", "B" data is chosen.

Power down protection is provided on all inputs and outputs and 0 to 7V can be accepted on inputs with no regard to the supply voltage. This device can be used to interface 5V to 3V since all inputs are equipped with TTL threshold.

All inputs and outputs are equipped with protection circuits against static discharge, giving them 2KV ESD immunity and transient excess voltage.

Figure 1: Pin Connection And IEC Logic Symbols

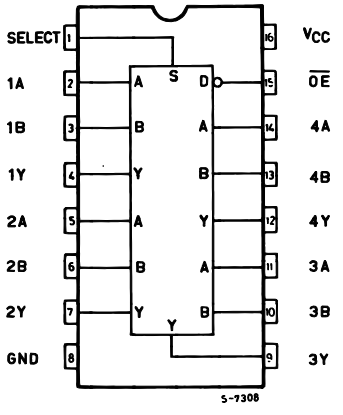

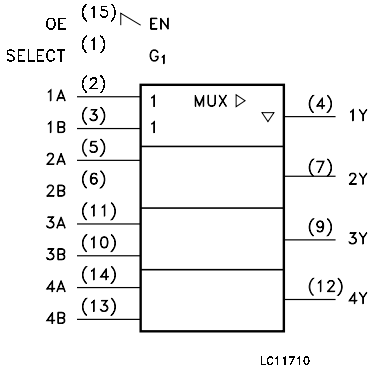

Figure 2: Input Equivalent Circuit

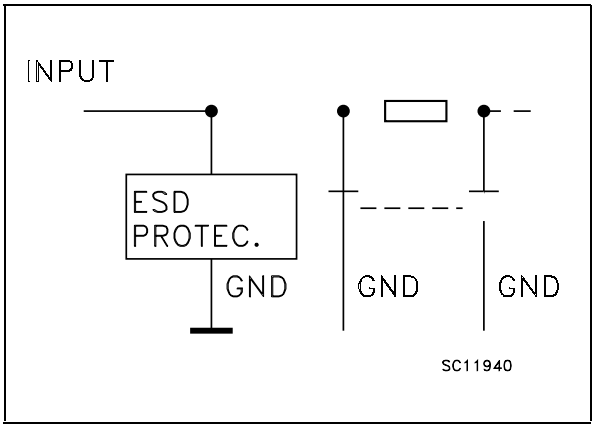

Table 2: Pin Description

PIN N°	SYMBOL	NAME AND FUNCTION
1	SELECT	Common Data Select Inputs
2, 5, 11, 14	1A to 4A	Data Inputs From Source A
3, 6, 10, 13	1B to 4B	Data Inputs From Source B
4, 7, 9, 12	1Y to 4Y	3 State Multiplexer Outputs
15	$\overline{OE}$	3 State Output Enable Inputs (Active LOW)
8	GND	Ground (0V)
16	V_{CC}	Positive Supply Voltage

Table 3: Truth Table

INPUTS				OUTPUT
$\overline{OE}$	SELECT	A	B	Y
H	X	X	X	Z
L	L	L	X	L
L	L	H	X	H
L	H	X	L	L
L	H	X	H	H

X: Don't Care
Z: High Impedance

Figure 3: Logic Diagram

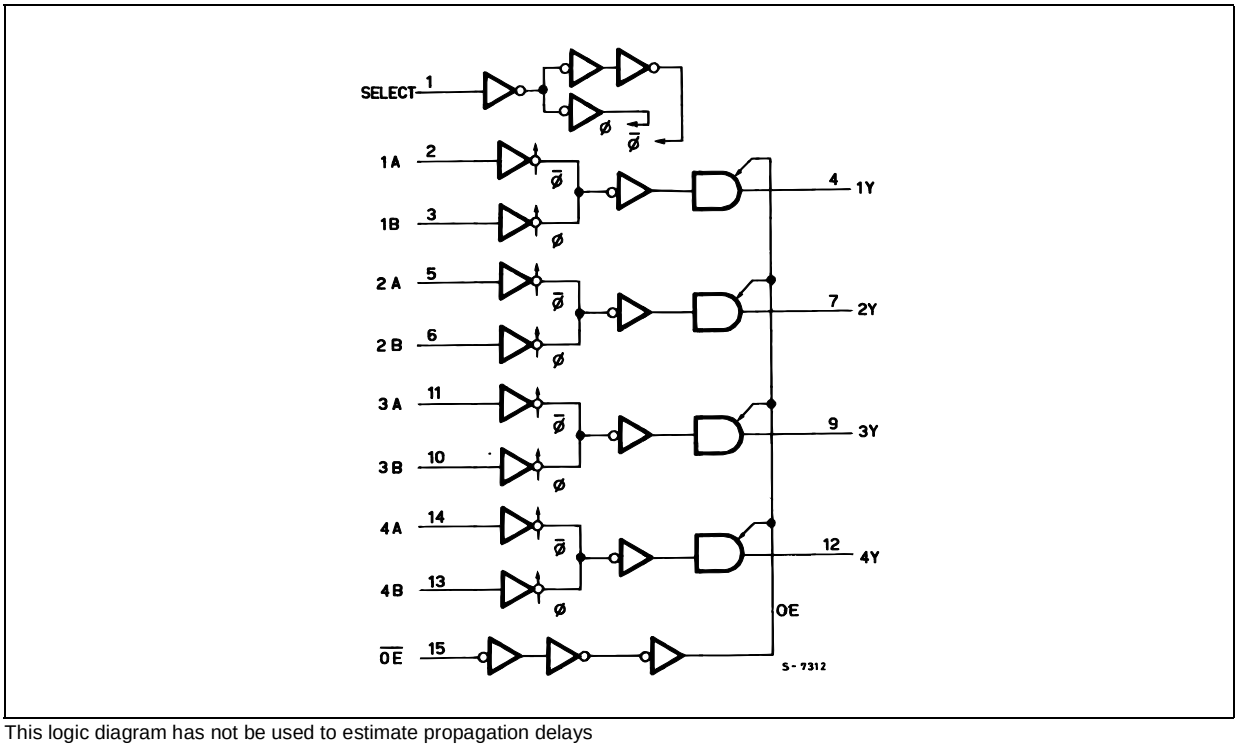

This logic diagram has not be used to estimate propagation delays

Table 4: Absolute Maximum Ratings

Symbol	Parameter	Value	Unit
V_{CC}	Supply Voltage	-0.5 to +7.0	V
V_I	DC Input Voltage	-0.5 to +7.0	V
V_O	DC Output Voltage (see note 1)	-0.5 to +7.0	V
V_O	DC Output Voltage (see note 2)	-0.5 to V_{CC} + 0.5	V
I_{IK}	DC Input Diode Current	- 20	mA
I_{OK}	DC Output Diode Current	± 20	mA
I_O	DC Output Current	± 25	mA
I_{CC} or I_{GND}	DC V_{CC} or Ground Current	± 50	mA
T_{stg}	Storage Temperature	-65 to +150	°C
T_L	Lead Temperature (10 sec)	300	°C

Absolute Maximum Ratings are those values beyond which damage to the device may occur. Functional operation under these conditions is not implied
1) Output in OFF State
2) High or Low State

Table 5: Recommended Operating Conditions

Symbol	Parameter	Value	Unit
V_{CC}	Supply Voltage	4.5 to 5.5	V
V_I	Input Voltage	0 to 5.5	V
V_O	Output Voltage (see note 1)	0 to 5.5	V
V_O	Output Voltage (see note 2)	0 to V_{CC}	V
T_{op}	Operating Temperature	-55 to 125	°C
dt/dv	Input Rise and Fall Time (see note 3) (V_{CC} = 5.0 ± 0.5V)	0 to 20	ns/V

1) Output in OFF State
2) High or Low State
3) V_{IN} from 0.8V to 2V

Table 6: DC Specifications

Symbol	Parameter	Test Condition		Value							Unit
		V_{CC} (V)		T_A = 25°C			-40 to 85°C		-55 to 125°C		
				Min.	Typ.	Max.	Min.	Max.	Min.	Max.	
V_{IH}	High Level Input Voltage	4.5 to 5.5		2			2		2		V
V_{IL}	Low Level Input Voltage	4.5 to 5.5				0.8		0.8		0.8	V
V_{OH}	High Level Output Voltage	4.5	I_O=-50 µA	4.4	4.5		4.4		4.4		V
		4.5	I_O=-8 mA	3.94			3.8		3.7		
V_{OL}	Low Level Output Voltage	4.5	I_O=50 µA		0.0	0.1		0.1		0.1	V
		4.5	I_O=8 mA			0.36		0.44		0.55	
I_{OZ}	High Impedance Output Leakage Current	5.5	$V_I = V_{IH}$ or V_{IL} V_O = 0V to 5.5V			±0.25		± 2.5		± 2.5	µA
I_I	Input Leakage Current	0 to 5.5	V_I = 5.5V or GND			± 0.1		± 1.0		± 1.0	µA
I_{CC}	Quiescent Supply Current	5.5	$V_I = V_{CC}$ or GND			4		40		40	µA
$^+I_{CC}$	Additional Worst Case Supply Current	5.5	One Input at 3.4V, other input at V_{CC} or GND			1.35		1.5		1.5	mA
I_{OPD}	Output Leakage Current	0	V_{OUT} = 5.5V			0.5		5.0		5.0	µA

Table 7: AC Electrical Characteristics (Input $t_r = t_f$ = 3ns)

Symbol	Parameter	Test Condition			Value							Unit
		V_{CC} (*) (V)	C_L (pF)		T_A = 25°C			-40 to 85°C		-55 to 125°C		
					Min.	Typ.	Max.	Min.	Max.	Min.	Max.	
t_{PLH} t_{PHL}	Propagation Delay Time A, B, to Y	5.0	15			4.8	7.0	1.0	8.0	1.0	8.0	ns
		5.0	50			5.5	8.0	1.0	9.0	1.0	9.0	
t_{PLH} t_{PHL}	Propagation Delay Time SELECT to Y	5.0	15			6.0	6.8	1.0	8.0	1.0	8.0	ns
		5.0	50			7.0	8.8	1.0	10.0	1.0	10.0	
t_{PZL} t_{PZH}	Output Enable Time	5.0	15			5.8	6.8	1.0	8.0	1.0	8.0	ns
		5.0	50			6.5	8.8	1.0	10.0	1.0	10.0	
t_{PLZ} t_{PHZ}	Output Disable Time	5.0	50			5.7	7.9	1.0	9.0	1.0	9.0	ns

(*) Voltage range is 5.0V ± 0.5V

Table 8: Capacitive Characteristics

Symbol	Parameter	Test Condition	Value							Unit
			T_A = 25°C			-40 to 85°C		-55 to 125°C		
			Min.	Typ.	Max.	Min.	Max.	Min.	Max.	
C_{IN}	Input Capacitance			4	10		10		10	pF
C_{OUT}	Output Capacitance			6						pF
C_{PD}	Power Dissipation Capacitance (note 1)			23						pF

1) C_{PD} is defined as the value of the IC's internal equivalent capacitance which is calculated from the operating current consumption without load. (Refer to Test Circuit). Average operating current can be obtained by the following equation. $I_{CC(opr)} = C_{PD} \times V_{CC} \times f_{IN} + I_{CC}/4$ (per Channel)

Table 9: Dynamic Switching Characteristics

Symbol	Parameter	Test Condition		Value							Unit
		V_{CC} (V)		T_A = 25°C			-40 to 85°C		-55 to 125°C		
				Min.	Typ.	Max.	Min.	Max.	Min.	Max.	
V_{OLP}	Dynamic Low Voltage Quiet Output (note 1, 2)	5.0	C_L = 50 pF		0.3	0.8					V
V_{OLV}				-0.8	-0.3						
V_{IHD}	Dynamic High Voltage Input (note 1, 3)	5.0		2.0							
V_{ILD}	Dynamic Low Voltage Input (note 1, 3)	5.0				0.8					

1) Worst case package.
2) Max number of outputs defined as (n). Data inputs are driven 0V to 3.0V, (n-1) outputs switching and one output at GND.
3) Max number of data inputs (n) switching. (n-1) switching 0V to 3.0V. Inputs under test switching: 3.0V to threshold (V_{ILD}), 0V to threshold (V_{IHD}), f=1MHz.

Figure 4: Test Circuit

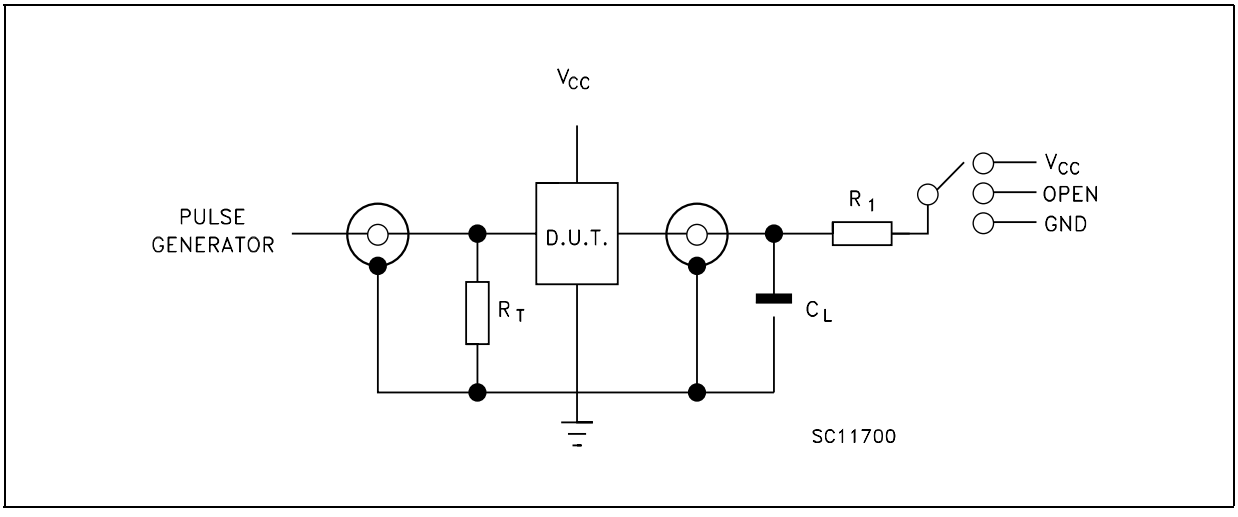

TEST	SWITCH
t_{PLH}, t_{PHL}	Open
t_{PZL}, t_{PLZ}	V_{CC}
t_{PZH}, t_{PHZ}	GND

C_L =15/ 50pF or equivalent (includes jig and probe capacitance)
$R_L = R_1$ = 1KΩ or equivalent
$R_T = Z_{OUT}$ of pulse generator (typically 50Ω)

Figure 5: Waveform - Propagation Delays For Inverting Conditions (f=1MHz; 50% duty cycle)

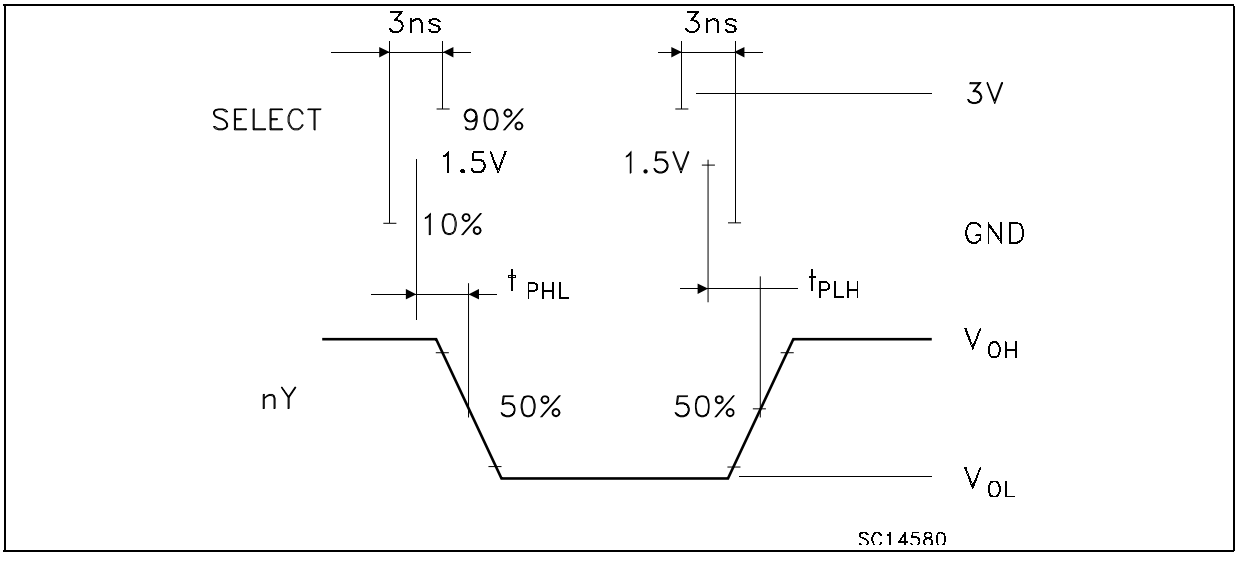

Figure 6: Waveform - Propagation Delays For Non-inverting Conditions (f=1MHz; 50% duty cycle)

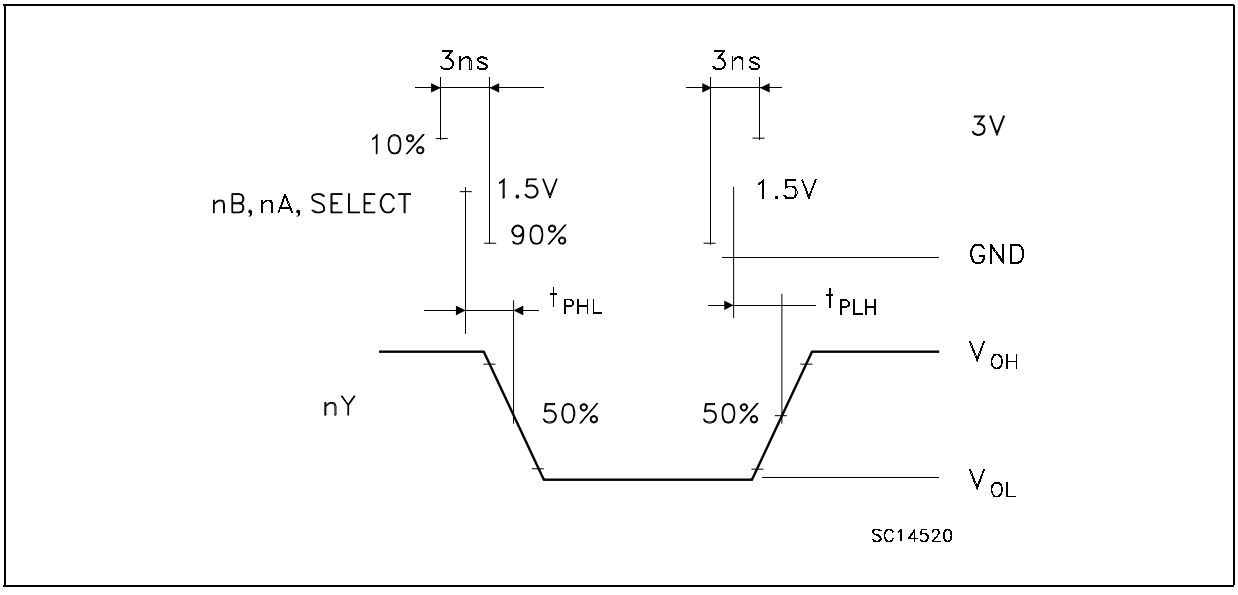

Figure 7: Waveform - Output Enable And Disable Time (f=1MHz; 50% duty cycle)

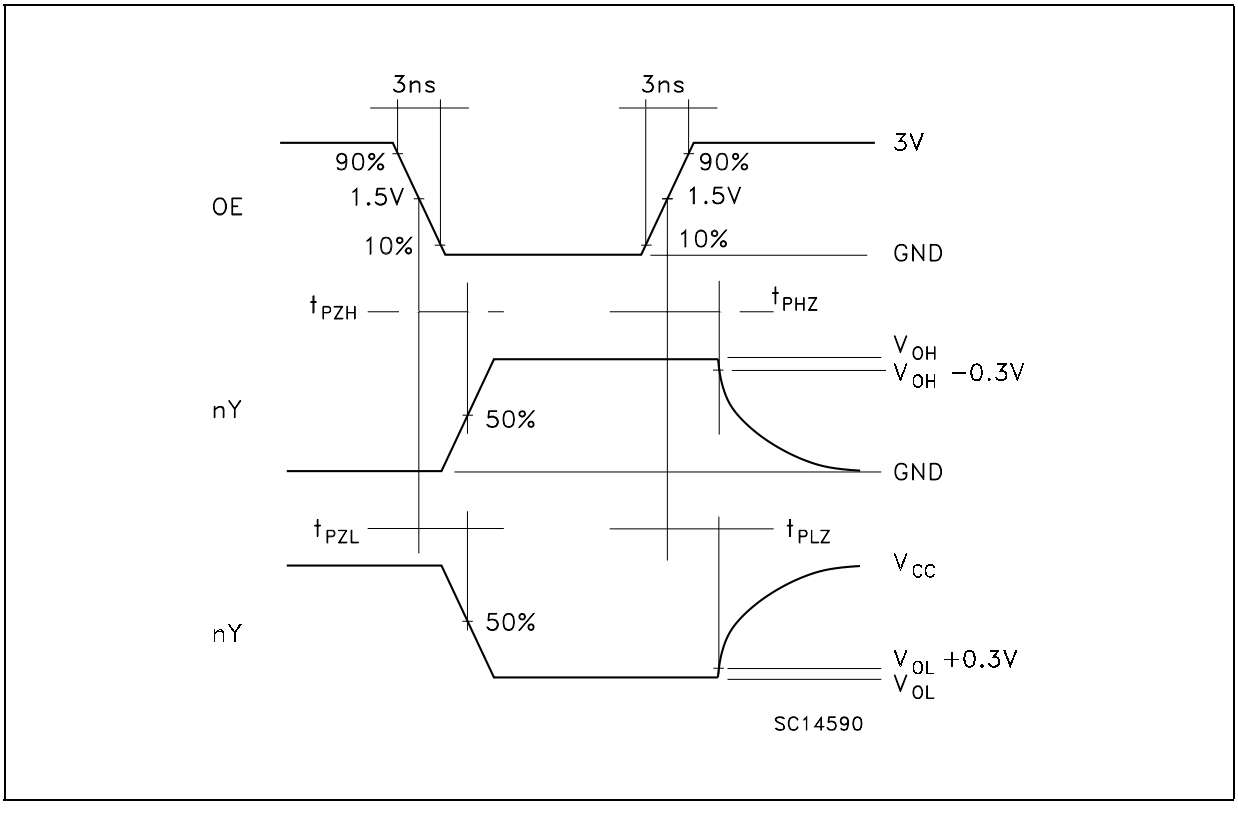

SO-16 MECHANICAL DATA

DIM.	mm.			inch		
	MIN.	TYP	MAX.	MIN.	TYP.	MAX.
A			1.75			0.068
a1	0.1		0.25	0.004		0.010
a2			1.64			0.063
b	0.35		0.46	0.013		0.018
b1	0.19		0.25	0.007		0.010
C		0.5			0.019	
c1	45° (typ.)					
D	9.8		10	0.385		0.393
E	5.8		6.2	0.228		0.244
e		1.27			0.050	
e3		8.89			0.350	
F	3.8		4.0	0.149		0.157
G	4.6		5.3	0.181		0.208
L	0.5		1.27	0.019		0.050
M			0.62			0.024
S	8° (max.)					

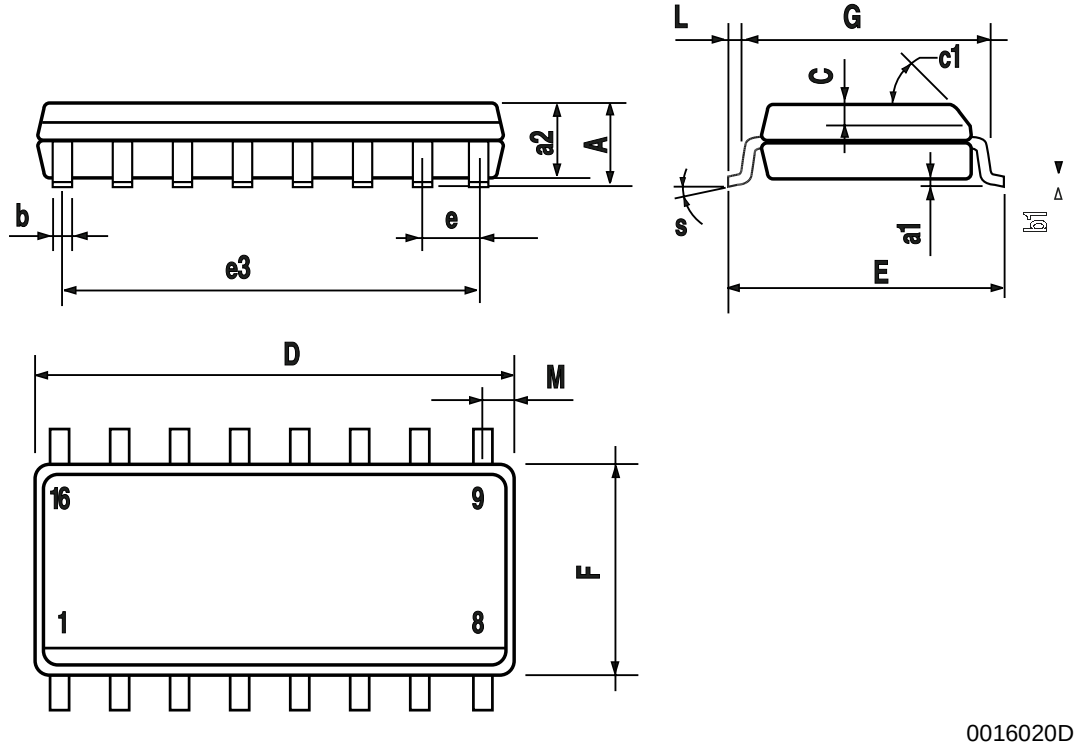

TSSOP16 MECHANICAL DATA

DIM.	mm.			inch		
	MIN.	TYP	MAX.	MIN.	TYP.	MAX.
A			1.2			0.047
A1	0.05		0.15	0.002	0.004	0.006
A2	0.8	1	1.05	0.031	0.039	0.041
b	0.19		0.30	0.007		0.012
c	0.09		0.20	0.004		0.0079
D	4.9	5	5.1	0.193	0.197	0.201
E	6.2	6.4	6.6	0.244	0.252	0.260
E1	4.3	4.4	4.48	0.169	0.173	0.176
e		0.65 BSC			0.0256 BSC	
K	0°		8°	0°		8°
L	0.45	0.60	0.75	0.018	0.024	0.030

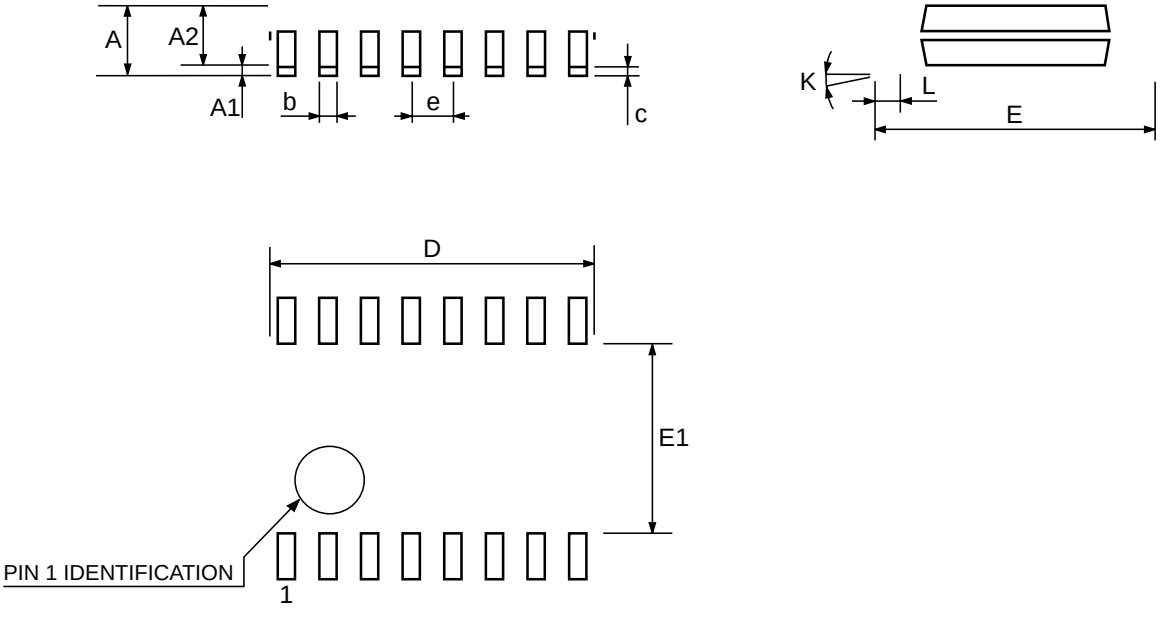

Tape & Reel SO-16 MECHANICAL DATA

DIM.	mm.			inch		
	MIN.	TYP	MAX.	MIN.	TYP.	MAX.
A			330			12.992
C	12.8		13.2	0.504		0.519
D	20.2			0.795		
N	60			2.362		
T			22.4			0.882
Ao	6.45		6.65	0.254		0.262
Bo	10.3		10.5	0.406		0.414
Ko	2.1		2.3	0.082		0.090
Po	3.9		4.1	0.153		0.161
P	7.9		8.1	0.311		0.319

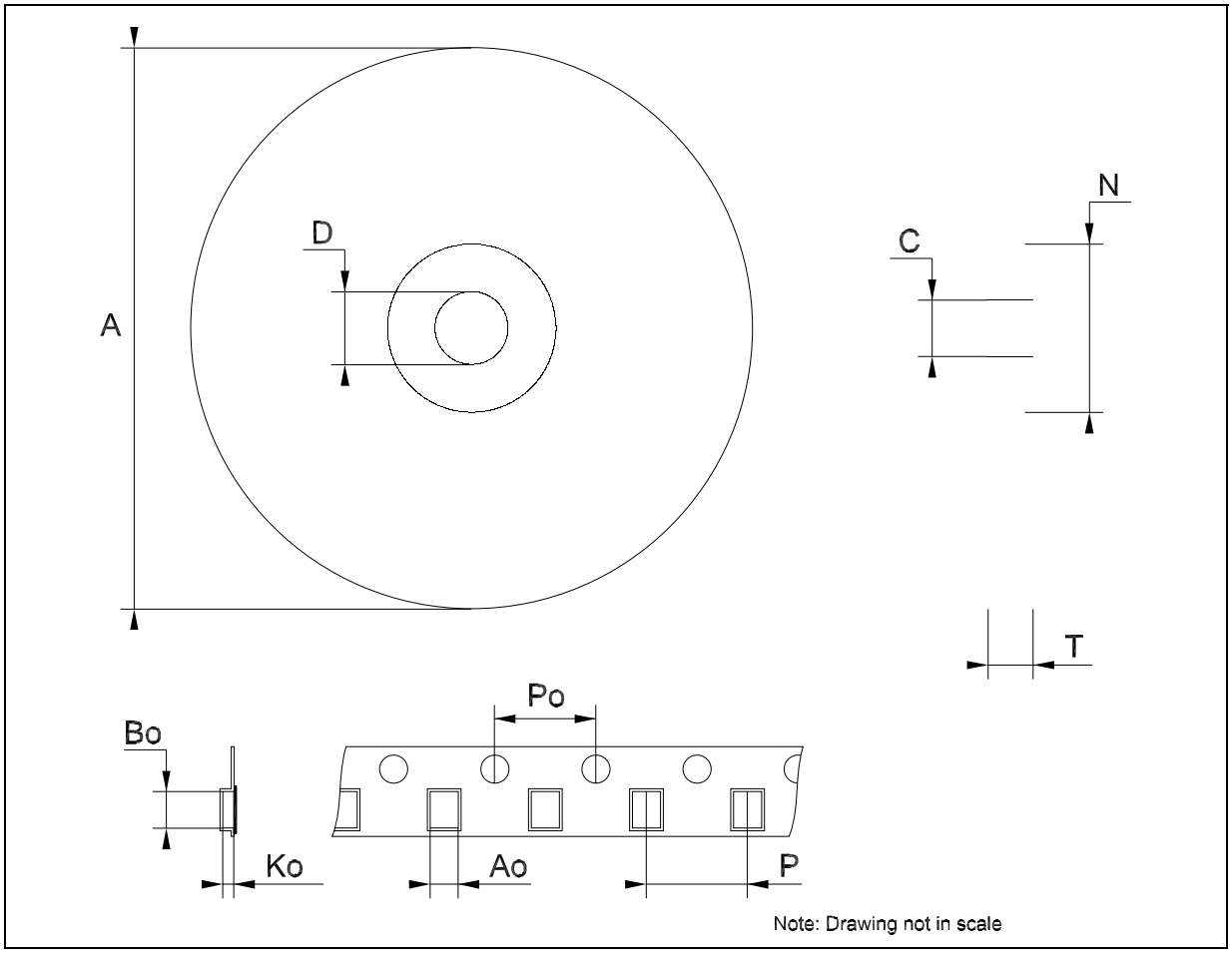

Note: Drawing not in scale

Tape & Reel TSSOP16 MECHANICAL DATA

DIM.	mm.			inch		
	MIN.	TYP	MAX.	MIN.	TYP.	MAX.
A			330			12.992
C	12.8		13.2	0.504		0.519
D	20.2			0.795		
N	60			2.362		
T			22.4			0.882
Ao	6.7		6.9	0.264		0.272
Bo	5.3		5.5	0.209		0.217
Ko	1.6		1.8	0.063		0.071
Po	3.9		4.1	0.153		0.161
P	7.9		8.1	0.311		0.319

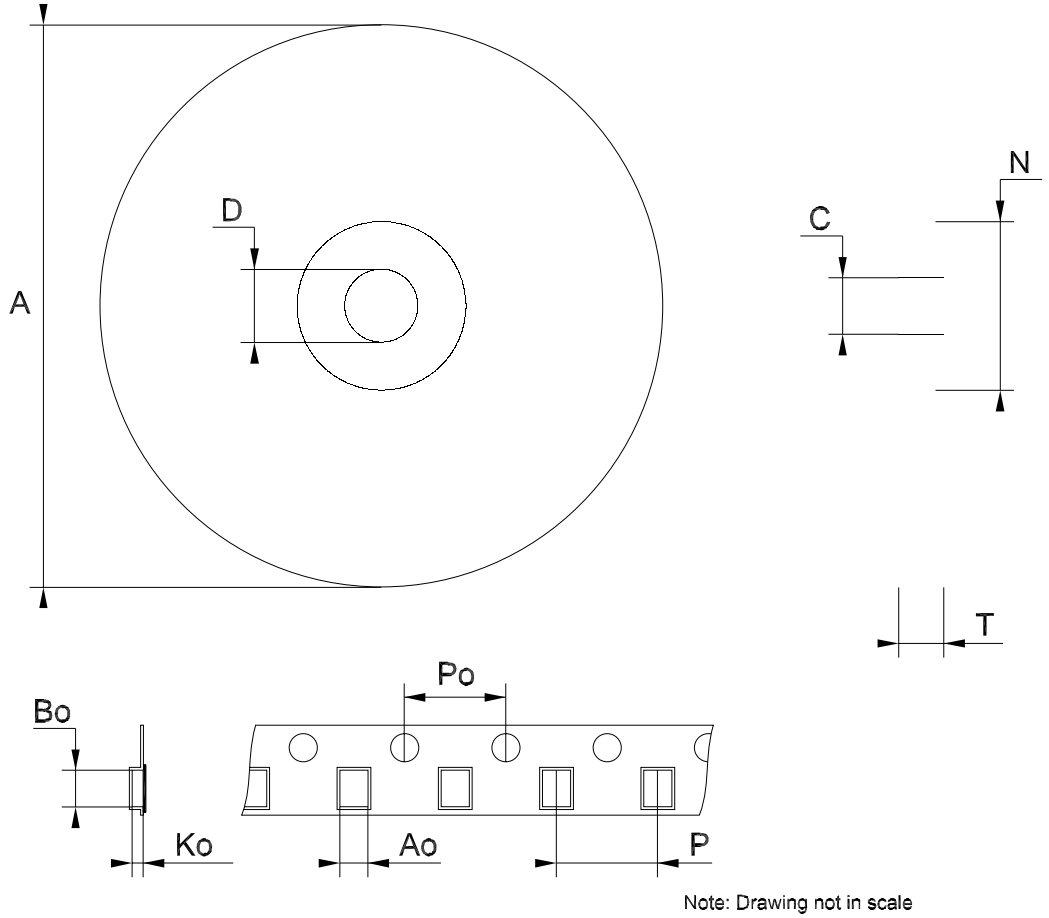

Note: Drawing not in scale

Table 10: Revision History

Date	Revision	Description of Changes
16-Dec-2004	3	Order Codes Revision - pag. 1.

Information furnished is believed to be accurate and reliable. However, STMicroelectronics assumes no responsibility for the consequences of use of such information nor for any infringement of patents or other rights of third parties which may result from its use. No license is granted by implication or otherwise under any patent or patent rights of STMicroelectronics. Specifications mentioned in this publication are subject to change without notice. This publication supersedes and replaces all information previously supplied. STMicroelectronics products are not authorized for use as critical components in life support devices or systems without express written approval of STMicroelectronics.

The ST logo is a registered trademark of STMicroelectronics

All other names are the property of their respective owners

© 2004 STMicroelectronics - All Rights Reserved

STMicroelectronics group of companies

Australia - Belgium - Brazil - Canada - China - Czech Republic - Finland - France - Germany - Hong Kong - India - Israel - Italy - Japan - Malaysia - Malta - Morocco - Singapore - Spain - Sweden - Switzerland - United Kingdom - United States of America

www.st.com