

Is Now Part of



ON Semiconductor®

To learn more about ON Semiconductor, please visit our website at
www.onsemi.com

Please note: As part of the Fairchild Semiconductor integration, some of the Fairchild orderable part numbers will need to change in order to meet ON Semiconductor's system requirements. Since the ON Semiconductor product management systems do not have the ability to manage part nomenclature that utilizes an underscore (_), the underscore (_) in the Fairchild part numbers will be changed to a dash (-). This document may contain device numbers with an underscore (_). Please check the ON Semiconductor website to verify the updated device numbers. The most current and up-to-date ordering information can be found at www.onsemi.com. Please email any questions regarding the system integration to Fairchild_questions@onsemi.com.

ON Semiconductor and the ON Semiconductor logo are trademarks of Semiconductor Components Industries, LLC dba ON Semiconductor or its subsidiaries in the United States and/or other countries. ON Semiconductor owns the rights to a number of patents, trademarks, copyrights, trade secrets, and other intellectual property. A listing of ON Semiconductor's product/patent coverage may be accessed at www.onsemi.com/site/pdf/Patent-Marking.pdf. ON Semiconductor reserves the right to make changes without further notice to any products herein. ON Semiconductor makes no warranty, representation or guarantee regarding the suitability of its products for any particular purpose, nor does ON Semiconductor assume any liability arising out of the application or use of any product or circuit, and specifically disclaims any and all liability, including without limitation special, consequential or incidental damages. Buyer is responsible for its products and applications using ON Semiconductor products, including compliance with all laws, regulations and safety requirements or standards, regardless of any support or applications information provided by ON Semiconductor. "Typical" parameters which may be provided in ON Semiconductor data sheets and/or specifications can and do vary in different applications and actual performance may vary over time. All operating parameters, including "Typicals" must be validated for each customer application by customer's technical experts. ON Semiconductor does not convey any license under its patent rights nor the rights of others. ON Semiconductor products are not designed, intended, or authorized for use as a critical component in life support systems or any FDA Class 3 medical devices or medical devices with a same or similar classification in a foreign jurisdiction or any devices intended for implantation in the human body. Should Buyer purchase or use ON Semiconductor products for any such unintended or unauthorized application, Buyer shall indemnify and hold ON Semiconductor and its officers, employees, subsidiaries, affiliates, and distributors harmless against all claims, costs, damages, and expenses, and reasonable attorney fees arising out of, directly or indirectly, any claim of personal injury or death associated with such unintended or unauthorized use, even if such claim alleges that ON Semiconductor was negligent regarding the design or manufacture of the part. ON Semiconductor is an Equal Opportunity/Affirmative Action Employer. This literature is subject to all applicable copyright laws and is not for resale in any manner.

FAIRCHILD SEMICONDUCTOR®

May 2007

74VHCT573A
Octal D-Type Latch with 3-STATE Outputs

Features

- High speed: t_{PD} = 7.7ns (Typ.) at T_A = 25°C
- High Noise Immunity: V_{IH} = 2.0V, V_{IL} = 0.8V
- Power Down Protection is provided on all inputs and outputs
- Low Noise: V_{OLP} = 1.6V (Max.)
- Low Power Dissipation: I_{CC} = 4μA (Max.) @ T_A = 25°C
- Pin and function compatible with 74HCT573

General Description

The VHCT573A is an advanced high speed CMOS octal latch with 3-STATE output fabricated with silicon gate CMOS technology. It achieves the high speed operation similar to equivalent Bipolar Schottky TTL while maintaining the CMOS low power dissipation. This 8-bit D-type latch is controlled by a Latch Enable input (LE) and an Output Enable input ($\overline{OE}$). When the $\overline{OE}$ input is HIGH, the eight outputs are in a high impedance state.

Protection circuits ensure that 0V to 7V can be applied to the input and output(1) pins without regard to the supply voltage. This device can be used to interface 3V to 5V systems and two supply systems such as battery back up. This circuit prevents device destruction due to mismatched supply and input voltages.

Note:

1. Outputs in OFF-State

Ordering Information

Order Number	Package Number	Package Description
74VHCT573AM	M20B	20-Lead Small Outline Integrated Circuit (SOIC), JEDEC MS-013, 0.300" Wide
74VHCT573ASJ	M20D	20-Lead Small Outline Package (SOP), EIAJ TYPE II, 5.3mm Wide
74VHCT573AMTC	MTC20	20-Lead Thin Shrink Small Outline Package (TSSOP), JEDEC MO-153, 4.4mm Wide

Surface mount packages are also available on Tape and Reel. Specify by appending the suffix letter “X” to the ordering number. Pb-Free package per JEDEC J-STD-020B.

Connection Diagram

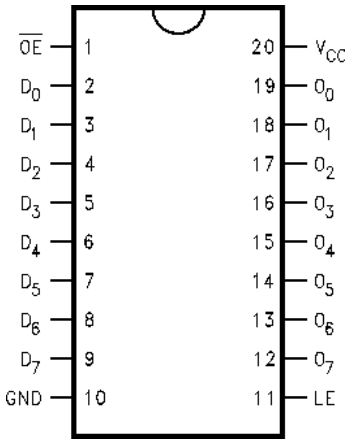

Pin Description

Pin Names	Description
D_0–D_7	Data Inputs
LE	Latch Enable Input
$\overline{OE}$	3-STATE Output Enable Input
O_0–O_7	3-STATE Outputs

©1997 Fairchild Semiconductor Corporation

Logic Symbol

IEEE/IEC

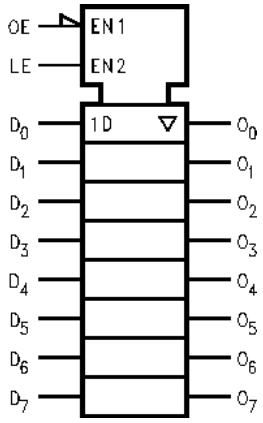

Functional Description

The VHCT573A contains eight D-type latches with 3-STATE output buffers. When the Latch Enable (LE) input is HIGH, data on the D_n inputs enters the latches. In this condition the latches are transparent, i.e., a latch output will change state each time its D input changes. When LE is LOW the latches store the information that was present on the D inputs, a setup time preceding the HIGH-to-LOW transition of LE. The 3-STATE buffers are controlled by the Output Enable ($\overline{OE}$) input. When $\overline{OE}$ is LOW, the buffers are enabled. When $\overline{OE}$ is HIGH the buffers are in the high impedance mode, but, this does not interfere with entering new data into the latches.

Truth Table

Inputs			Outputs
$\overline{OE}$	LE	D	O_n
L	H	H	H
L	H	L	L
L	L	X	O_0
H	X	X	Z

H = HIGH Voltage Level

L = LOW Voltage Level

X = Immaterial

Z = High Impedance

Logic Diagram

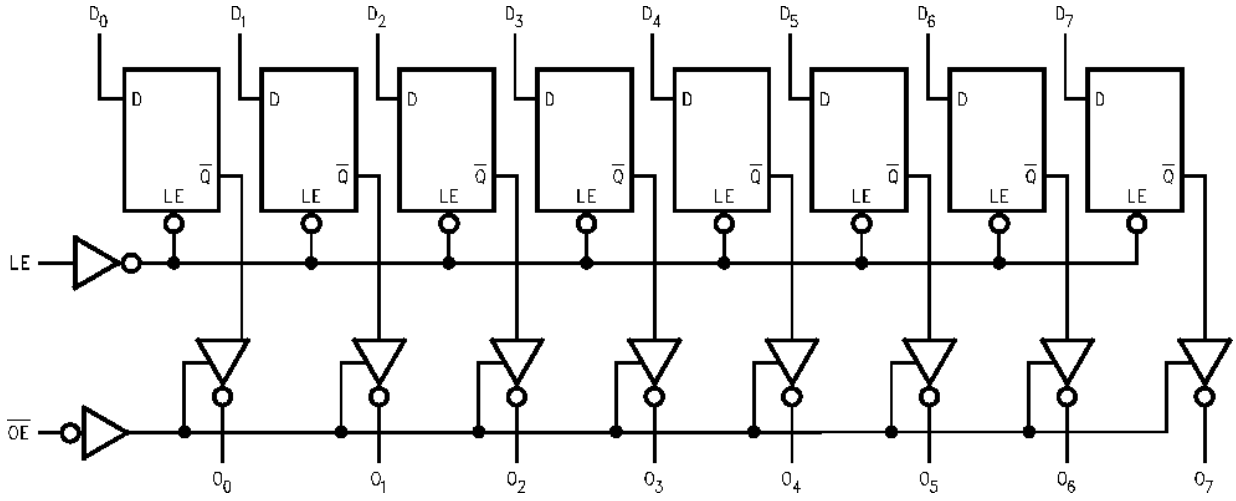

Please note that this diagram is provided only for the understanding of logic operations and should not be used to estimate propagation delays.

Absolute Maximum Ratings

Stresses exceeding the absolute maximum ratings may damage the device. The device may not function or be operable above the recommended operating conditions and stressing the parts to these levels is not recommended. In addition, extended exposure to stresses above the recommended operating conditions may affect device reliability. The absolute maximum ratings are stress ratings only.

Symbol	Parameter	Rating
V_{CC}	Supply Voltage	–0.5V to +7.0V
V_{IN}	DC Input Voltage	–0.5V to +7.0V
V_{OUT}	DC Output Voltage	
	Note 2	–0.5V to V_{CC} + 0.5V
	Note 3	–0.5V to +7.0V
I_{IK}	Input Diode Current	–20mA
I_{OK}	Output Diode Current(4)	±20mA
I_{OUT}	DC Output Current	±25mA
I_{CC}	DC V_{CC} / GND Current	±75mA
T_{STG}	Storage Temperature	–65°C to +150°C
T_L	Lead Temperature (Soldering, 10 seconds)	260°C

Recommended Operating Conditions(5)

The Recommended Operating Conditions table defines the conditions for actual device operation. Recommended operating conditions are specified to ensure optimal performance to the datasheet specifications. Fairchild does not recommend exceeding them or designing to absolute maximum ratings.

Symbol	Parameter	Rating
V_{CC}	Supply Voltage	4.5V to +5.5V
V_{IN}	Input Voltage	0V to +5.5V
V_{OUT}	Output Voltage	
	Note 2	0V to V_{CC}
	Note 3	0V to 5.5V
T_{OPR}	Operating Temperature	–40°C to +85°C
t_r, t_f	Input Rise and Fall Time, V_{CC} = 5.0V ± 0.5V	0ns/V ~ 20ns/V

Notes:

2. HIGH or LOW state. I_{OUT} absolute maximum rating must be observed.
3. When outputs are in OFF-State or when V_{CC} = 0V.
4. V_{OUT} < GND, V_{OUT} > V_{CC} (Outputs Active).
5. Unused inputs must be held HIGH or LOW. They may not float.

©1997 Fairchild Semiconductor Corporation

DC Electrical Characteristics

Symbol	Parameter	V_{CC} (V)	Conditions		$T_A = 25°C$			$T_A = -40°C$ to $+85°C$		Units
					Min.	Typ.	Max.	Min.	Max.	
V_{IH}	HIGH Level Input Voltage	4.5			2.0			2.0		V
		5.5			2.0			2.0		
V_{IL}	LOW Level Input Voltage	4.5					0.8		0.8	V
		5.5					0.8		0.8	
V_{OH}	HIGH Level Output Voltage	4.5	$V_{IN} = V_{IH}$ or V_{IL}	$I_{OH} = -50\mu A$	4.40	4.50		4.40		V
				$I_{OH} = -8mA$	3.94			3.80		
V_{OL}	LOW Level Output Voltage	4.5	$V_{IN} = V_{IH}$ or V_{IL}	$I_{OL} = 50\mu A$		0.0	0.1		0.1	V
				$I_{OL} = 8mA$			0.36		0.44	
I_{OZ}	3-STATE Output Off-State Current	5.5	$V_{IN} = V_{IH}$ or V_{IL}, $V_{OUT} = V_{CC}$ or GND				±0.25		±2.5	μA
I_{IN}	Input Leakage Current	0–5.5	$V_{IN} = 5.5V$ or GND				±0.1		±1.0	μA
I_{CC}	Quiescent Supply Current	5.5	$V_{IN} = V_{CC}$ or GND				4.0		40.0	μA
I_{CCT}	Maximum I_{CC}/Input	5.5	$V_{IN} = 3.4V$, Other Inputs = V_{CC} or GND				1.35		1.50	mA
I_{OFF}	Output Leakage Current (Power Down State)	0.0	$V_{OUT} = 5.5V$				0.5		5.0	μA

Noise Characteristics

Symbol	Parameter	V_{CC} (V)	Conditions	$T_A = 25°C$		Units
				Typ.	Limits	
V_{OLP}[6]	Quiet Output Maximum Dynamic V_{OL}	5.0	$C_L = 50pF$	1.2	1.6	V
V_{OLV}[6]	Quiet Output Minimum Dynamic V_{OL}	5.0	$C_L = 50pF$	–1.2	–1.6	V
V_{IHD}[6]	Minimum HIGH Level Dynamic Input Voltage	5.0	$C_L = 50pF$		2.0	V
V_{ILD}[6]	Maximum LOW Level Dynamic Input Voltage	5.0	$C_L = 50pF$		0.8	V

Note:

6. Parameter guaranteed by design.

©1997 Fairchild Semiconductor Corporation

AC Electrical Characteristics

Symbol	Parameter	V_{CC} (V)	Conditions		T_A = +25°C			T_A = –40°C to +85°C		Units
					Min.	Typ.	Max.	Min.	Max.	
t_{PLH}, t_{PHL}	Propagation Delay Time (LE to O_n)	5.0 ± 0.5		C_L = 15pF		7.7	12.3	1.0	13.5	ns
				C_L = 50pF		8.5	13.3	1.0	14.5	
t_{PLH}, t_{PHL}	Propagation Delay Time (D to O_n)	5.0 ± 0.5		C_L = 15pF		5.1	8.5	1.0	9.5	ns
				C_L = 50pF		5.9	9.5	1.0	10.5	
t_{PZL}, t_{PZH}	3-STATE Output Enable Time	5.0 ± 0.5	R_L = 1kΩ	C_L = 15pF		6.3	10.9	1.0	12.5	ns
				C_L = 50pF		7.1	11.9	1.0	13.5	
t_{PLZ}, t_{PHZ}	3-STATE Output Disable Time	5.0 ± 0.5	R_L = 1kΩ	C_L = 50pF		8.8	11.2	1.0	12.0	ns
t_{OSLH}, t_{OSHL}	Output to Output Skew	5.0 ± 0.5	(7)				1.0		1.0	ns
C_{IN}	Input Capacitance		V_{CC} = Open			4	10		10	pF
C_{OUT}	Output Capacitance		V_{CC} = 5.0V			6				pF
C_{PD}	Power Dissipation Capacitance		(8)			25				pF

Notes:

7. Parameter guaranteed by design. $t_{OSLH} = |t_{PLH\ max} - t_{PLH\ min}|$; $t_{OSHL} = |t_{PHL\ max} - t_{PHL\ min}|$
8. C_{PD} is defined as the value of the internal equivalent capacitance which is calculated from the operating current consumption without load. Average operating current can be obtained by the equation: I_{CC} (Opr.) = C_{PD} • V_{CC} • f_{IN} + I_{CC} / 8 (per F/F). The total C_{PD} when n pcs. of the Latch operates can be calculated by the equation: C_{PD}(total) = 14 + 13n.

AC Operating Requirements

Symbol	Parameter	V_{CC} (V)	T_A = +25°C			T_A = –40°C to +85°C		Units
			Min.	Typ.	Max.	Min.	Max.	
t_W(H)	Minimum Pulse Width (LE)	5.0 ± 0.5	6.5			8.5		ns
t_S	Minimum Set-Up Time	5.0 ± 0.5	1.5			1.5		ns
t_H	Minimum Hold Time	5.0 ± 0.5	3.5			3.5		ns

©1997 Fairchild Semiconductor Corporation

Physical Dimensions

Dimensions are in millimeters unless otherwise noted.

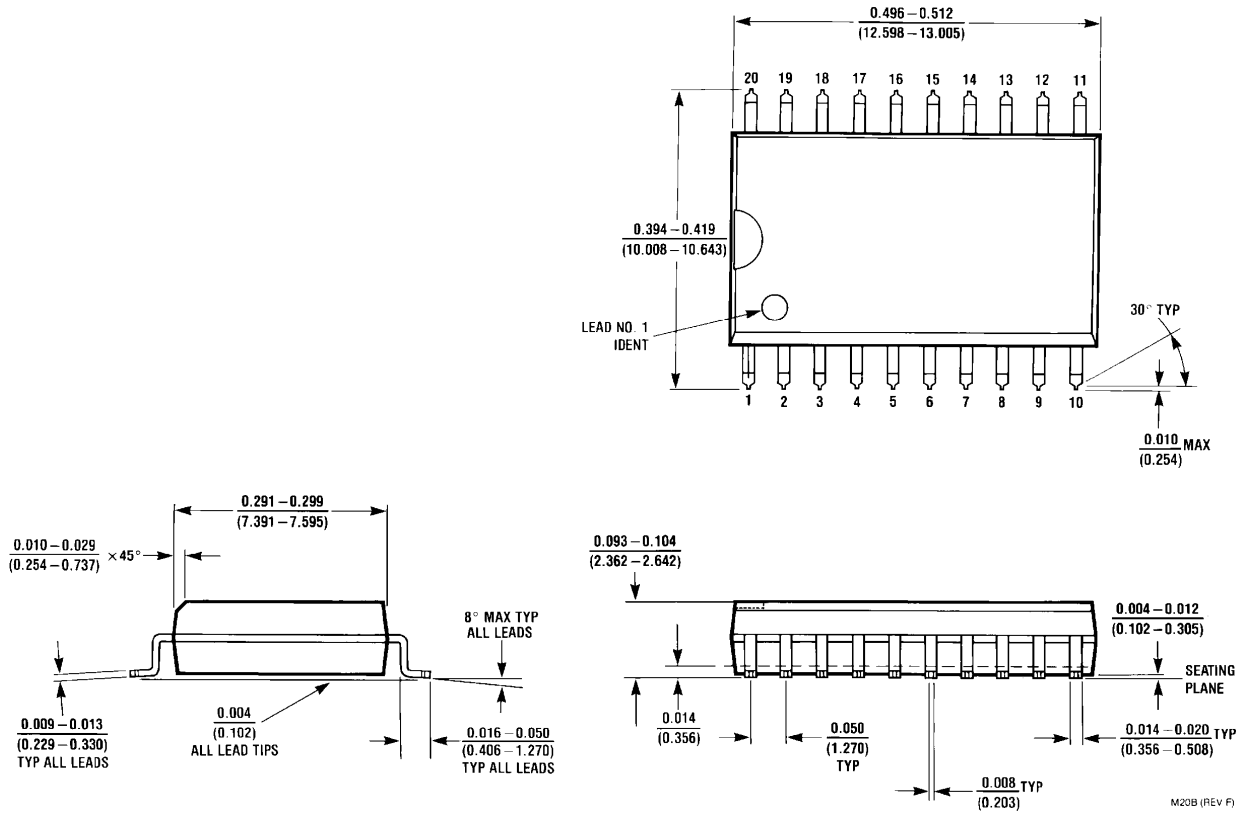

Figure 1. 20-Lead Small Outline Integrated Circuit (SOIC), JEDEC MS-013, 0.300" Wide
Package Number M20B

Physical Dimensions (Continued)

Dimensions are in millimeters unless otherwise noted.

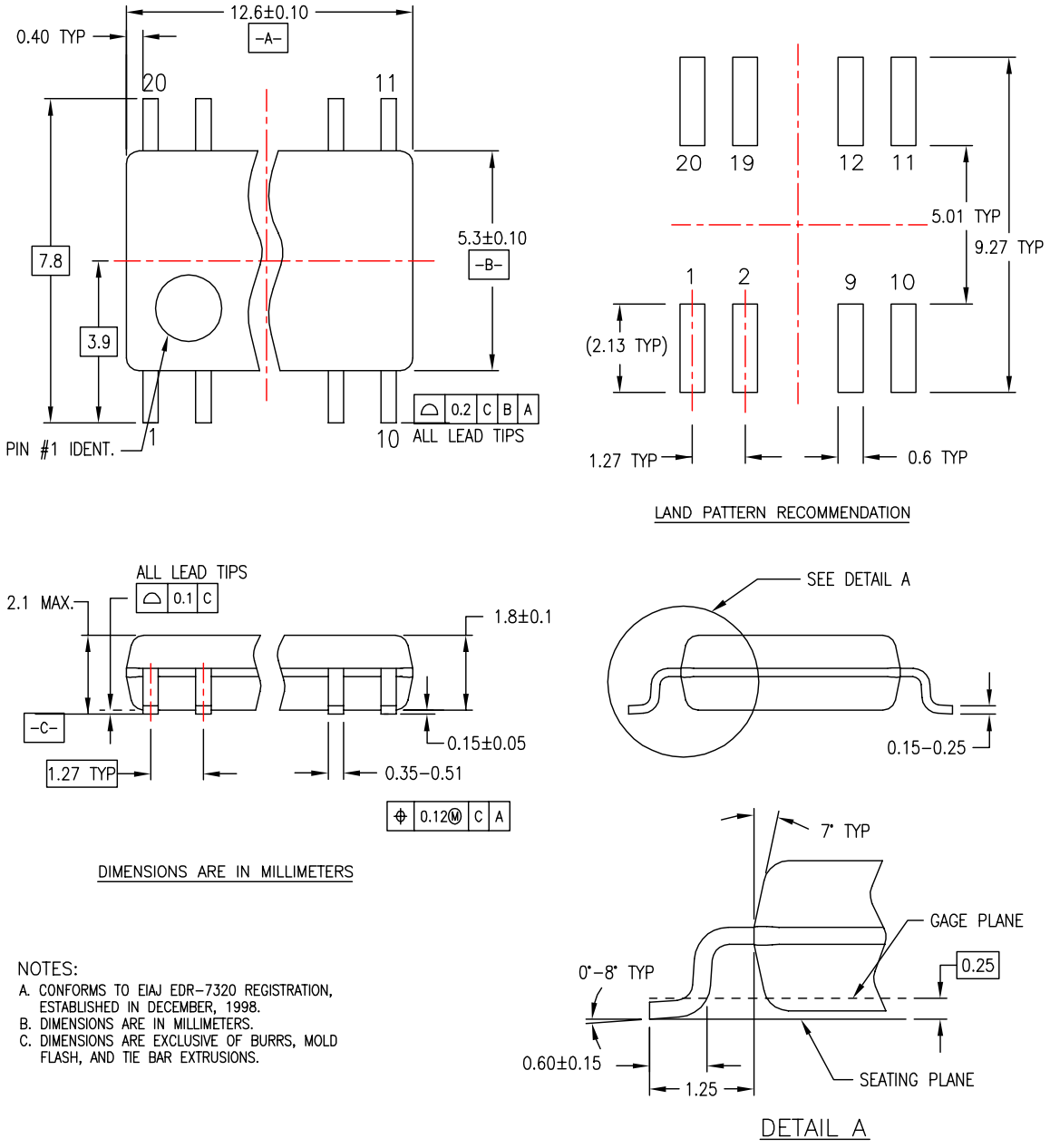

NOTES:

A. CONFORMS TO EIAJ EDR–7320 REGISTRATION, ESTABLISHED IN DECEMBER, 1998.
B. DIMENSIONS ARE IN MILLIMETERS.
C. DIMENSIONS ARE EXCLUSIVE OF BURRS, MOLD FLASH, AND TIE BAR EXTRUSIONS.

M20DREVC

Figure 2. 20-Lead Small Outline Package (SOP), EIAJ TYPE II, 5.3mm Wide
Package Number M20D

Physical Dimensions (Continued)

Dimensions are in millimeters unless otherwise noted.

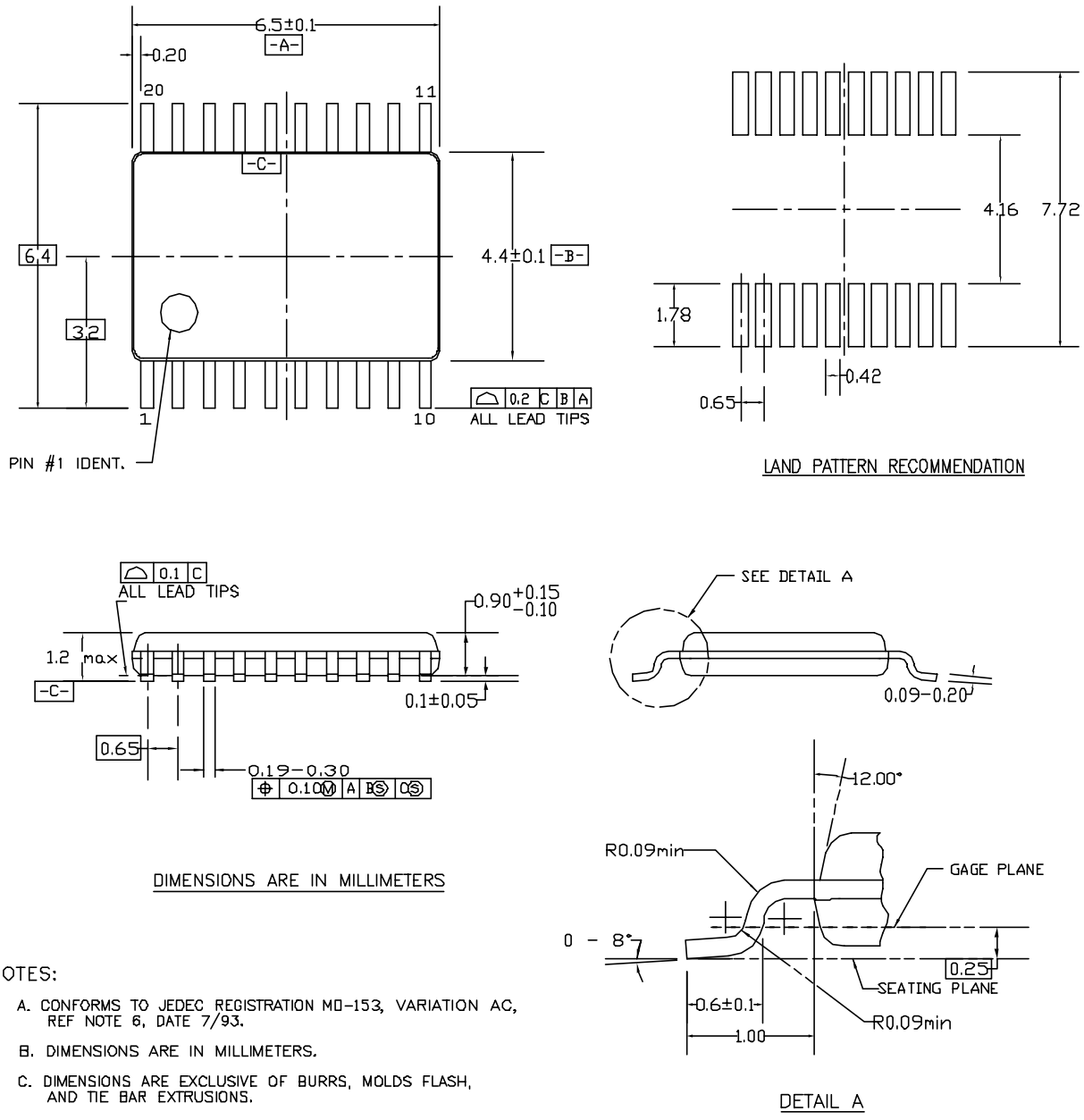

NOTES:

A. CONFORMS TO JEDEC REGISTRATION MO-153, VARIATION AC, REF NOTE 6, DATE 7/93.

B. DIMENSIONS ARE IN MILLIMETERS.

C. DIMENSIONS ARE EXCLUSIVE OF BURRS, MOLDS FLASH, AND TIE BAR EXTRUSIONS.

D. DIMENSIONS AND TOLERANCES PER ANSI Y14.5M, 1982.

MTC20REVD1

Figure 3. 20-Lead Thin Shrink Small Outline Package (TSSOP), JEDEC MO-153, 4.4mm Wide
Package Number MTC20

FAIRCHILD
SEMICONDUCTOR®

TRADEMARKS

The following are registered and unregistered trademarks Fairchild Semiconductor owns or is authorized to use and is not intended to be an exhaustive list of all such trademarks.

ACEx®
Across the board. Around the world.™
ActiveArray™
Bottomless™
Build it Now™
CoolFET™
CorePLUS™
CROSSVOLT™
CTL™
Current Transfer Logic™
DOME™
E²CMOS™
EcoSPARK®
EnSigna™
FACT Quiet Series™
FACT®
FAST®
FASTr™
FPS™
FRFET®
GlobalOptoisolator™
GTO™
HiSeC™
i-Lo™
ImpliedDisconnect™
IntelliMAX™
ISOPLANAR™
MICROCOUPLER™
MicroPak™
MICROWIRE™
Motion-SPM™
MSX™
MSXPro™
OCX™
OCXPro™
OPTOLOGIC®
OPTOPLANAR®
PACMAN™
PDP-SPM™
POP™
Power220®
Power247®
PowerEdge™
PowerSaver™
Power-SPM™
PowerTrench®
Programmable Active Droop™
QFET®
QS™
QT Optoelectronics™
Quiet Series™
RapidConfigure™
RapidConnect™
ScalarPump™
SMART START™
SPM®
STEALTH™
SuperFET™
SuperSOT™-3
SuperSOT™-6
SuperSOT™-8
SyncFET™
TCM™
The Power Franchise®
™
TinyBoost™
TinyBuck™
TinyLogic®
TINYOPTO™
TinyPower™
TinyWire™
TruTranslation™
µSerDes™
UHC®
UniFET™
VCX™
Wire™

DISCLAIMER

FAIRCHILD SEMICONDUCTOR RESERVES THE RIGHT TO MAKE CHANGES WITHOUT FURTHER NOTICE TO ANY PRODUCTS HEREIN TO IMPROVE RELIABILITY, FUNCTION, OR DESIGN. FAIRCHILD DOES NOT ASSUME ANY LIABILITY ARISING OUT OF THE APPLICATION OR USE OF ANY PRODUCT OR CIRCUIT DESCRIBED HEREIN; NEITHER DOES IT CONVEY ANY LICENSE UNDER ITS PATENT RIGHTS, NOR THE RIGHTS OF OTHERS. THESE SPECIFICATIONS DO NOT EXPAND THE TERMS OF FAIRCHILD'S WORLDWIDE TERMS AND CONDITIONS, SPECIFICALLY THE WARRANTY THEREIN, WHICH COVERS THESE PRODUCTS.

LIFE SUPPORT POLICY

FAIRCHILD'S PRODUCTS ARE NOT AUTHORIZED FOR USE AS CRITICAL COMPONENTS IN LIFE SUPPORT DEVICES OR SYSTEMS WITHOUT THE EXPRESS WRITTEN APPROVAL OF FAIRCHILD SEMICONDUCTOR CORPORATION.

As used herein:

1. Life support devices or systems are devices or systems which, (a) are intended for surgical implant into the body or (b) support or sustain life, and (c) whose failure to perform when properly used in accordance with instructions for use provided in the labeling, can be reasonably expected to result in a significant injury of the user.
2. A critical component in any component of a life support, device, or system whose failure to perform can be reasonably expected to cause the failure of the life support device or system, or to affect its safety or effectiveness.

PRODUCT STATUS DEFINITIONS

Definition of Terms

Datasheet Identification	Product Status	Definition
Advance Information	Formative or In Design	This datasheet contains the design specifications for product development. Specifications may change in any manner without notice.
Preliminary	First Production	This datasheet contains preliminary data; supplementary data will be published at a later date. Fairchild Semiconductor reserves the right to make changes at any time without notice to improve design.
No Identification Needed	Full Production	This datasheet contains final specifications. Fairchild Semiconductor reserves the right to make changes at any time without notice to improve design.
Obsolete	Not In Production	This datasheet contains specifications on a product that has been discontinued by Fairchild Semiconductor. The datasheet is printed for reference information only.

Rev. I27

©1997 Fairchild Semiconductor Corporation

ON Semiconductor and ON are trademarks of Semiconductor Components Industries, LLC dba ON Semiconductor or its subsidiaries in the United States and/or other countries. ON Semiconductor owns the rights to a number of patents, trademarks, copyrights, trade secrets, and other intellectual property. A listing of ON Semiconductor's product/patent coverage may be accessed at www.onsemi.com/site/pdf/Patent−Marking.pdf. ON Semiconductor reserves the right to make changes without further notice to any products herein. ON Semiconductor makes no warranty, representation or guarantee regarding the suitability of its products for any particular purpose, nor does ON Semiconductor assume any liability arising out of the application or use of any product or circuit, and specifically disclaims any and all liability, including without limitation special, consequential or incidental damages. Buyer is responsible for its products and applications using ON Semiconductor products, including compliance with all laws, regulations and safety requirements or standards, regardless of any support or applications information provided by ON Semiconductor. "Typical" parameters which may be provided in ON Semiconductor data sheets and/or specifications can and do vary in different applications and actual performance may vary over time. All operating parameters, including "Typicals" must be validated for each customer application by customer's technical experts. ON Semiconductor does not convey any license under its patent rights nor the rights of others. ON Semiconductor products are not designed, intended, or authorized for use as a critical component in life support systems or any FDA Class 3 medical devices or medical devices with a same or similar classification in a foreign jurisdiction or any devices intended for implantation in the human body. Should Buyer purchase or use ON Semiconductor products for any such unintended or unauthorized application, Buyer shall indemnify and hold ON Semiconductor and its officers, employees, subsidiaries, affiliates, and distributors harmless against all claims, costs, damages, and expenses, and reasonable attorney fees arising out of, directly or indirectly, any claim of personal injury or death associated with such unintended or unauthorized use, even if such claim alleges that ON Semiconductor was negligent regarding the design or manufacture of the part. ON Semiconductor is an Equal Opportunity/Affirmative Action Employer. This literature is subject to all applicable copyright laws and is not for resale in any manner.

PUBLICATION ORDERING INFORMATION

LITERATURE FULFILLMENT:
Literature Distribution Center for ON Semiconductor
19521 E. 32nd Pkwy, Aurora, Colorado 80011 USA
Phone: 303−675−2175 or 800−344−3860 Toll Free USA/Canada
Fax: 303−675−2176 or 800−344−3867 Toll Free USA/Canada
Email: orderlit@onsemi.com

N. American Technical Support: 800−282−9855 Toll Free USA/Canada
Europe, Middle East and Africa Technical Support:
Phone: 421 33 790 2910
Japan Customer Focus Center
Phone: 81−3−5817−1050

ON Semiconductor Website: **www.onsemi.com**

Order Literature: http://www.onsemi.com/orderlit

For additional information, please contact your local Sales Representative