RoHS Compliant

2GB DDR3 SDRAM SO-DIMM Industrial

Product Specifications

March 13, 2014

Version 1.1

Apacer Technology Inc.
1F., No.32, Zhongcheng Rd., Tucheng Dist., New Taipei City 236, Taiwan
Tel: +886-2-2267-8000 Fax: +886-2-2267-2261
www.apacer.com

Table of Contents

General Description 2
Ordering Information 2
Key Parameters 2
Specifications: 3
Features: 4
Pin Assignments 5
Pin Descriptions 7
Functional Block Diagram 8
Absolute Maximum Ratings 9
DRAM Component Operating Temperature Range 10
Operating Conditions 11
IDD Specifications 12
Mechanical Drawing 12

General Description

Apacer **75.A83E4.G010C** is a 256M x 64 DDR3 SDRAM (Synchronous DRAM) SO-DIMM. This high-density memory module consists of 8 pieces 256M x 8 bits with 8 banks DDR3 synchronous DRAMs in BGA packages and a 2K EEPROM. The module is a 204-pins small-outlined, dual in-line memory module and is intended for mounting into a connector socket. Decoupling capacitors are mounted on the printed circuit board for each DDR3 SDRAM. The following provides general specifications of this module.

Ordering Information

Part Number	Bandwidth	Speed Grade	Max Frequency	CAS Latency
75.A83E4.G010C	12.8 GB/sec	1600 Mbps	800 MHz	CL11

Density	Organization	Component	Rank
2GB	256M x 64	256M x8*8	1

Key Parameters

MT/s	DDR3-1066	DDR3-1333	DDR3-1600	Unit
Grade	-CL7	-CL9	-CL11	
tCK (min)	1.875	1.5	1.25	ns
CAS latency	7	9	11	tCK
tRCD (min)	13.125	13.5	13.75	ns
tRP (min)	13.125	13.5	13.75	ns
tRAS (min)	37.5	36	35	ns
tRC (min)	50.625	49.5	48.75	ns
CL-tRCD-tRP	7-7-7	9-9-9	11-11-11	tCK

Specifications:

- On-DIMM thermal sensor : No
- Organization: 256 words x 64 bits, 1 rank
- Integrating 8 pieces of 2G bits DDR3 SDRAM sealed in FBGA
- Package: 204-pin socket type small outline dual in-line memory module (SO-DIMM)
- PCB: height 30.0mm, lead pitch 0.6 mm (pin), lead-free (RoHS compliant)
- Power supply VDD: 1.5V ± 0.075V
- Serial Presence Detect (SPD)
- Eight Internal banks for concurrent operation (components)
- Interface: SSTL_15
- Burst lengths (BL): 8 and 4 with Burst Chop (BC)
- CAS Latency (CL): 6, 7, 8, 9, 10, 11
- CAS Write Latency (CWL): 5, 6, 7, 8
- Supports auto pre-charge option for each burst access
- Supports auto-refresh/self-refresh
- Refresh cycles: 7.8 μs at 0℃≤ TC ≤ +85℃
- Operating case temperature range: Industrial (-40 °C ≤ TC ≤ +95°C)

Features:

- Double-date-rate architecture: 2 data transfers per clock cycle
- The high-speed data transfer is realized by the 8-bits prefetch pipelined architecture.
- Bi-directional differential data strobe (DQS and /DQS) is transmitted / received with data for capturing data at the receiver
- DQS: edge-aligned with data for read; center-aligned with data for write
- Differential clock inputs (CK and /CK)
- DLL aligns DQ and DQS transitions with CK transitions
- Data mask (DM) for writing data
- Posted CAS by programmable additive latency for enhanced command and data bus efficiency
- On-Die-Termination (ODT) for improved signal quality: Synchronous ODT/Dynamic ODT/Asynchronous ODT
- Multi-Purpose Register (MPR) for temperature read out
- ZQ calibration for DQ drive and ODT
- Programmable Partial Array Self-Refresh (PASR)
- /Reset pin for power-up sequence and reset function
- SRT range: normal/extended, auto/manual self-refresh
- Programmable output driver impedance control

Pin Assignments

Pin No.	Pin name	Pin No.	Pin name	Pin No.	Pin name	Pin No.	Pin name
1	VREFDQ	53	DQ19	105	VDD	157	DQ42
3	VSS	55	VSS	107	A10(AP)	159	DQ43
5	DQ0	57	DQ24	109	BA0	161	VSS
7	DQ1	59	DQ25	111	VDD	163	DQ48
9	VSS	61	VSS	113	/WE	165	DQ49
11	DM0	63	DM3	115	/CAS	167	VSS
13	VSS	65	VSS	117	VDD	169	/DQS6
15	DQ2	67	DQ26	119	A13	171	DQS6
17	DQ3	69	DQ27	121	/CS1	173	VSS
19	VSS	71	VSS	123	VDD	175	DQ50
21	DQ8	73	CKE0	125	NC	177	DQ51
23	DQ9	75	VDD	127	VSS	179	VSS
25	VSS	77	NC	129	DQ32	181	DQ56
27	/DQS1	79	BA2	131	DQ33	183	DQ57
29	DQS1	81	VDD	133	VSS	185	VSS
31	VSS	83	A12(BC)	135	/DQS4	187	DM7
33	DQ10	85	A9	137	DQS4	189	VSS
35	DQ11	87	VDD	139	VSS	191	DQ58
37	VSS	89	A8	141	DQ34	193	DQ59
39	DQ16	91	A5	143	DQ35	195	VSS
41	DQ17	93	VDD	145	VSS	197	SA0
43	VSS	95	A3	147	DQ40	199	VDDSPD
45	/DQS2	97	A1	149	DQ41	201	SA1
47	DQS2	99	VDD	151	VSS	203	VTT
49	VSS	101	CK0	153	DM5		
51	DQ18	103	/CK0	155	VSS		

Pin No.	Pin name	Pin No.	Pin name	Pin No.	Pin name	Pin No.	Pin name
2	VSS	54	VSS	106	VDD	158	DQ46
4	DQ4	56	DQ28	108	BA1	160	DQ47
6	DQ5	58	DQ29	110	/RAS	162	VSS
8	VSS	60	VSS	112	VDD	164	DQ52
10	/DQS0	62	/DQS3	114	/CS0	166	DQ53
12	DQS0	64	DQS3	116	ODT0	168	VSS
14	VSS	66	VSS	118	VDD	170	DM6
16	DQ6	68	DQ30	120	ODT1	172	VSS
18	DQ7	70	DQ31	122	NC	174	DQ54
20	VSS	72	VSS	124	VDD	176	DQ55
22	DQ12	74	CKE1	126	VREFCA	178	VSS
24	DQ13	76	VDD	128	VSS	180	DQ60
26	VSS	78	A15(NC)	130	DQ36	182	DQ61
28	DM1	80	A14(NC)	132	DQ37	184	VSS
30	/RESET	82	VDD	134	VSS	186	/DQS7
32	VSS	84	A11	136	DM4	188	DQS7
34	DQ14	86	A7	138	VSS	190	VSS
36	DQ15	88	VDD	140	DQ38	192	DQ62
38	VSS	90	A6	142	DQ39	194	DQ63
40	DQ20	92	A4	144	VSS	196	VSS
42	DQ21	94	VDD	146	DQ44	198	/EVENT
44	VSS	96	A2	148	DQ45	200	SDA
46	DM2	98	A0	150	VSS	202	SCL
48	VSS	100	VDD	152	/DQS5	204	VTT
50	DQ22	102	CK1	154	DQS5		
52	DQ23	104	/CK1	156	VSS		

Pin Descriptions

Pin Name	Description
Ax*	SDRAM address bus
BAx	SDRAM bank select
DQx	DIMM memory data bus
/RAS	SDRAM row address strobe
/CAS	SDRAM column address strobe
/WE	SDRAM write enable
/CSx	SDRAM Chip select lines
CKEx	SDRAM clock enable lines
CKx	SDRAM clock input
/CKx	SDRAM Differential clock input
DQSx	SDRAM data strobes(positive line of differential pair)
/DQSx	SDRAM data strobes(negative line of differential pair)
DMx	SDRAM input mask
SCL	Clock input for serial PD
SDA	Data input/output for serial PD
SAx	Serial address input
VDD	Power for internal circuit
VDDSPD	Serial EEPROM positive power supply
VREFDQ	SDRAM I/O reference supply
VREFCA	SDRAM command/address reference supply
VSS	Power supply return(ground)
VTT	SDRAM I/O termination supply
/RESET	Set DRAM to known state
ODTx	On-die termination control lines
NC	Spare pins(no connect)
/EVENT	An output of the thermal sensor to indicate critical module temperature

*IC Component Composition:

128Mx8	A0~A13
256Mx8	A0~A14
512Mx8	A0~A15
1024Mx8	A0~A15

Functional Block Diagram

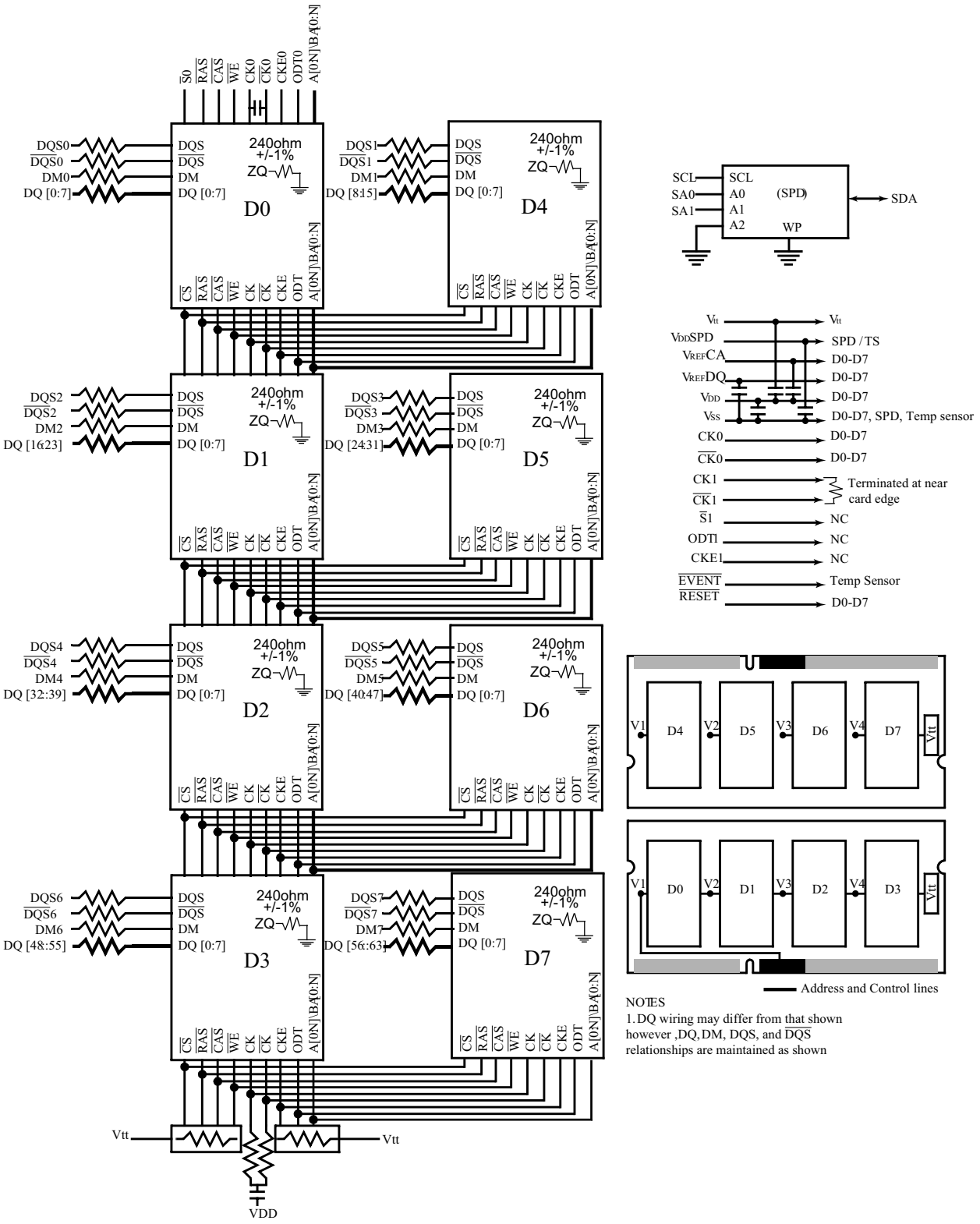

NOTES
1. DQ wiring may differ from that shown however ,DQ, DM, DQS, and $\overline{DQS}$ relationships are maintained as shown

Absolute Maximum Ratings

Parameter	Symbol	Description	Units
Voltage on VDD pin relative to Vss	V_{DD}	- 0.4 V ~ 1.975 V	V
Voltage on VDDQ pin relative to Vss	V_{DDQ}	- 0.4 V ~ 1.975 V	V
Voltage on any pin relative to Vss	V_{IN}, V_{OUT}	- 0.4 V ~ 1.975 V	V
Storage Temperature	TSTG	-55 to +100	℃

Notes:

1. Stresses greater than those listed under “Absolute Maximum Ratings” may cause permanent damage to the device. This is a stress rating only and functional operation of the device at these or any other conditions above those indicated in the operational sections of this specification is not implied. Exposure to absolute maximum rating conditions for extended periods may affect reliability.
2. Storage Temperature is the case surface temperature on the center/top side of the DRAM. For the measurement conditions, please refer to JESD51-2 standard.
3. VDD and VDDQ must be within 300mV of each other at all times; and VREF must not be greater than 0.6 x VDDQ, when VDD and VDDQ are less than 500mV; VREF may be equal to or less than 300mV.

.

DRAM Component Operating Temperature Range

Symbol	Parameter	Rating	Units	Notes
TOPER	Operating Temperature Range	-40 to 95	℃	1,2

Notes:

1. Operating Temperature TOPER is the case surface temperature on the center/top side of the DRAM. For measurement conditions, please refer to the JEDEC document JESD51-2.
2. The Normal Temperature Range specifies the temperatures where all DRAM specifications will be supported. During operation, the DRAM case temperature must be maintained between -40°C~95°C under all operating conditions.

Industrial Temperature:

The industrial temperature device requires that the case temperature not exceed –40°C or +95°C. JEDEC specifications require the refresh rate to double when TC exceeds+85°C; this also requires use of the high-temperature self refresh option.

- MAX operating case temperature. TC is measured in the center of the package.
- A thermal solution must be designed to ensure the DRAM device does not exceed the maximum TC during operation.
- Device functionality is not guaranteed if the DRAM device exceeds the maximum TC during operation.
- If TC exceeds +85°C, the DRAM must be refreshed externally at 2X refresh, which is a 3.9µs interval refresh rate.

Operating Conditions

Recommended DC Operating Conditions - DDR3 (1.5V) operation

Symbol	Parameter	Rating			Units
		Min.	Typ.	Max.	
VDD	Supply Voltage	1.425	1.5	1.575	V
VDDQ	Supply Voltage for Output	1.425	1.5	1.575	V

Notes:

1. Under all conditions VDDQ must be less than or equal to VDD..
2. VDDQ tracks with VDD. AC parameters are measured with VDD and VDDQ tied together.

IDD Specifications

Conditions	Symbol	MICRON	Unit
Operating one bank active-precharge current: tCK = tCK (IDD); tRC = tRC (IDD); tRAS = tRAS MIN (IDD); CKE is HIGH, CS# is HIGH between valid commands; Address bus inputs are SWITCHING; Data bus inputs are SWITCHING	IDD0	336	mA
Operating one bank active-read-precharge current: IOUT = 0 mA; BL = 8; CL = CL (IDD);, AL = 0;, tCK = tCK (IDD); tRC = tRC (IDD); tRAS = tRAS MIN (IDD); tRCD = tRCD (IDD); CKE is HIGH, CS# is HIGH between valid commands; Address bus inputs are SWITCHING; Data pattern is same as IDD4W	IDD1	448	mA
Precharge power-down current: All device banks idle; tCK = tCK (IDD); CKE is LOW; Other control and address bus inputs are STABLE; Data bus inputs are FLOATING	IDD2P-0	96	mA
	IDD2P-1	120	mA
Precharge standby current; All device banks idle: tCK = tCK (IDD); CKE is HIGH; CS# is HIGH; Other control and address bus inputs are SWITCHING; Data bus inputs are SWITCHING	IDD2N	184	mA
Precharge quiet standby current: All device banks idle; tCK = tCK (IDD); CKE is HIGH; CS# is HIGH; Other control and address bus inputs are STABLE; Data bus inputs are FLOATING	IDD2Q	176	mA
Active power-down current: All device banks open; tCK = tCK (IDD); CKE is LOW; Other control and address bus inputs are STABLE; Data bus inputs are FLOATING	IDD3P	176	mA
Active standby current: All device banks open; tCK = tCK (IDD); tRP = tRP (IDD); tRAS = tRAS MAX (IDD); CKE is HIGH, CS# is HIGH between valid commands; Other control and address bus inputs are SWITCHING; Data bus inputs are SWITCHING	IDD3N	280	mA

Operating burst read current: All device banks open; Continuous burst reads; IOUT = 0 mA; BL = 8; CL = CL (IDD); AL = 0; tCK = tCK (IDD); tRAS = tRAS MAX (IDD); tRP = tRP (IDD); CKE is HIGH, CS# is HIGH between valid commands; Address bus inputs are SWITCHING; Data patter is same as IDD4W	IDD4R	800	mA
Operating burst write current: All device banks open; Continuous burst writes; BL = 8; CL = CL(IDD);AL = 0; tCK= tCK(IDD); tRAS= tRAS MAX(IDD); tRP= tRP(IDD); CKE is HIGH, CS# is HIGH between valid commands; Address bus inputs are SWITCHING; Data bus inputs are SWITCHING.	IDD4W	824	mA
Burst refresh current: tCK=tCK(IDD); Refresh command at every tRFC(IDD) interval; CKE is HIGH; CS# is HIGH between valid commands; Other control and address bus inputs are SWITCHING; Data bus inputs are SWITCHING.	IDD5B	896	mA
Self refresh current: CK and CK# at 0V; CKE < 0.2V; Other control and address bus inputs are FLOATING; Data bus inputs are FLOATING.	IDD6	96	mA
Self refresh temperature current (SRT-enabled): MAX TC = 95°C	IDD6ET	120	mA
Operating bank interleave read current All bank interleaving reads; IOUT = 0mA; BL = 8; CL = CL(IDD); AL = tRCD(IDD) - 1*tCK(IDD); tCK= tCK(IDD); tRC= tRC(IDD); tRRD = tRRD(IDD); tRCD = 1*tCK(IDD) ; CKE is HIGH; CS# is HIGH between valid commands; Address bus inputs are STABLE during DESELECTs; Data pattern is same as IDD4R.	IDD7	1304	mA
Reset current	IDD8	112	mA

Notes:

*Value calculated as one module rank in this operating condition, and all other module ranks in IDD2P (CKE LOW) mode.

**Value calculated reflects all module ranks in this operating condition.

Mechanical Drawing

Unit: mm

Front side

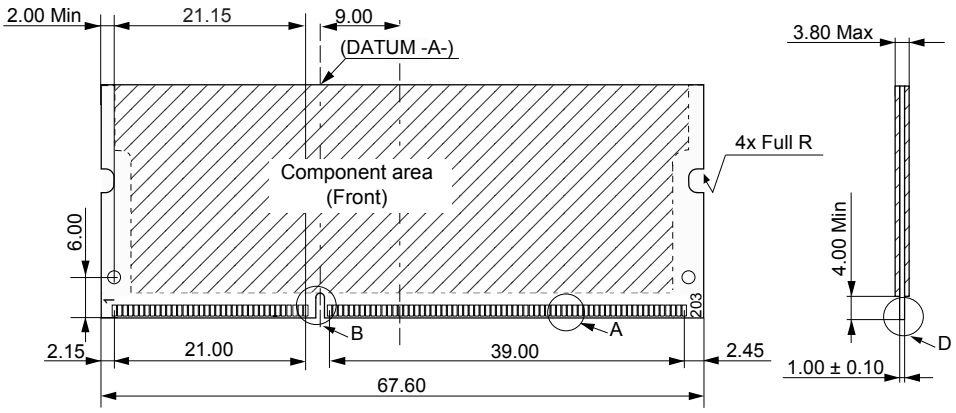

Back side

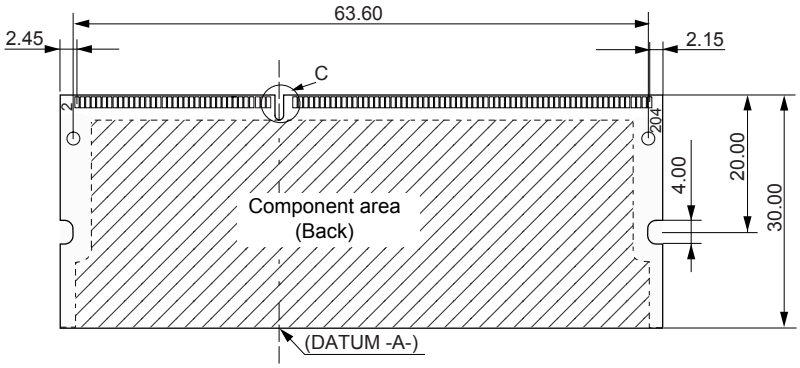

Detail A

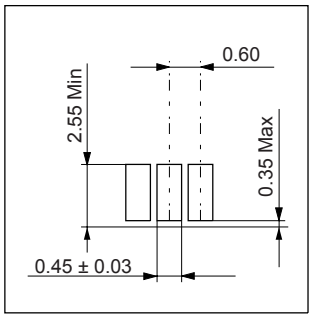

Detail B

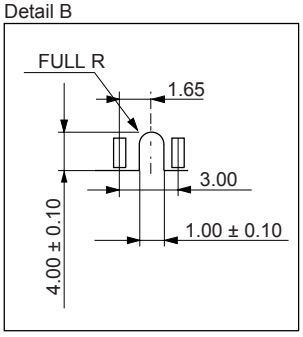

Detail C

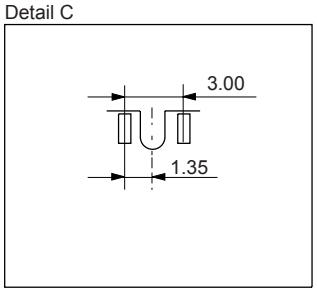

Detail D

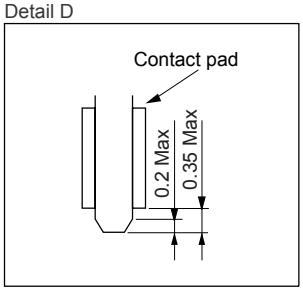

(All dimensions are in millimeters with ±0.15mm tolerance unless specified otherwise.)

Revision History

Revision	Date	Description	Remark
0.9	08/28/2012	Official release	
1.0	08/29/2012	release	
1.1	07/23/2013	Changed headquarters address	

Global Presence

Taiwan (Headquarters)

Apacer Technology Inc.
1F., No.32, Zhongcheng Rd., Tucheng Dist.,
New Taipei City 236, Taiwan R.O.C.
Tel: +886-2-2267-8000
Fax: +886-2-2267-2261
amtsales@apacer.com

U.S.A.

Apacer Memory America, Inc.
386 Fairview Way, Suite102,
Milpitas, CA 95035
Tel: 1-408-518-8699
Fax: 1-408-935-9611
sa@apacerus.com

Japan

Apacer Technology Corp.
5F, Matsura Bldg., Shiba, Minato-Ku
Tokyo, 105-0014, Japan
Tel: 81-3-5419-2668
Fax: 81-3-5419-0018
jpservices@apacer.com

Europe

Apacer Technology B.V.
Science Park Eindhoven 5051 5692 EB Son,
The Netherlands
Tel: 31-40-267-0000
Fax: 31-40-267-0000#6199
sales@apacer.nl

China

Apacer Electronic (Shanghai) Co., Ltd
1301, No.251,Xiaomuqiao Road, Shanghai,
200032, China
Tel: 86-21-5529-0222
Fax: 86-21-5206-6939
sales@apacer.com.cn

India

Apacer Technologies Pvt Ltd,
535, 1st Floor, 8th cross, JP Nagar 3rd Phase,
Bangalore – 560078, India
Tel: 91-80-4152-9061
sales_india@apacer.com