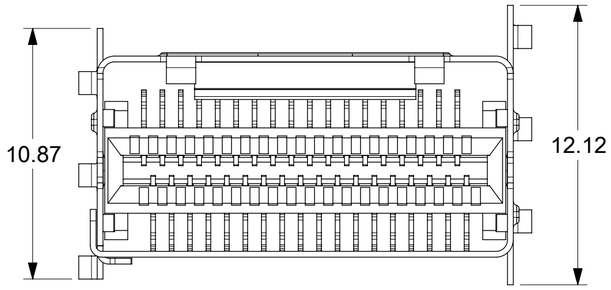

SMT

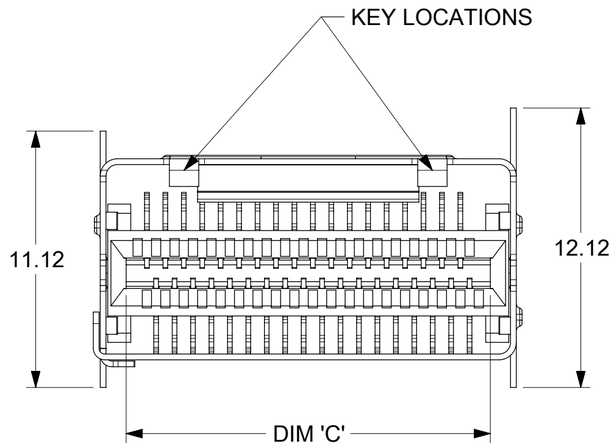

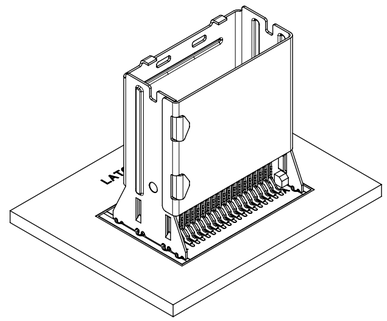

NOTES:
1. MATERIAL:
   CONNECTOR:
   HOUSING - HIGH TEMPERATURE THERMOPLASTIC GLASS FILLED, UL 94V-0, BLACK
   TERMINALS - COPPER ALLOY
   SHELL
   NICKEL SILVER, C770, THICKNESS: 0.250/0.254
2. FINISH:
   CONNECTOR
   OPTION 1
   CONTACT AREA - 0.38µm MIN GOLD OVER 2.54 µm NICKEL
   SOLDER FOOT AREA - 2.54-5.09µm TIN OVER 1.27 µm NICKEL
   OPTION 2
   CONTACT AREA - 0.76µm MIN GOLD OVER 2.54 µm NICKEL
   SOLDER FOOT AREA - 2.54-5.09µm TIN OVER 1.27 µm NICKEL
3. TERMINAL SOLDER FEET TO BE COPLANAR WITHIN 0.10 MEASURED FROM DATUM E
4. DATE CODE: 4 DIGIT (3 DIGIT DAY, 1 DIGIT YEAR) ON CONNECTOR ONLY
5. CIRCUIT IDENTIFIER: SEE APPROPRIATE INDUSTRY SPECIFICATION FOR LOCATION OF PIN 1
6. TO BE USED WITH THE FOLLOWING CABLE SERIES:
   79575/74563/79576/74573/79536/74562/74569/74586
7. PACKAGED PER PACKAGING SPECIFICATION: PK-75783-001
8. CONFORMS TO PRODUCT SPECIFICATION: PS-75783-001
9. PROCESS PER APPLICATION SPECIFICATION: AS-75783-001
10. THIS PART CONFORMS TO CLASS C REQUIREMENTS OF COSMETIC SPEC PS-45499-002

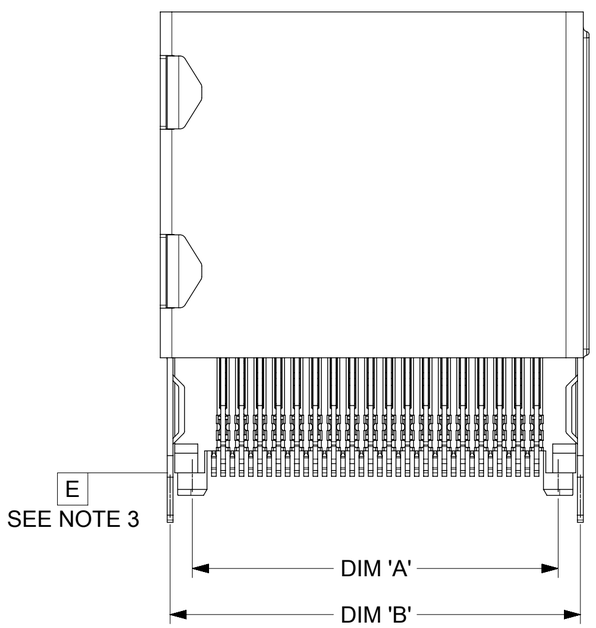

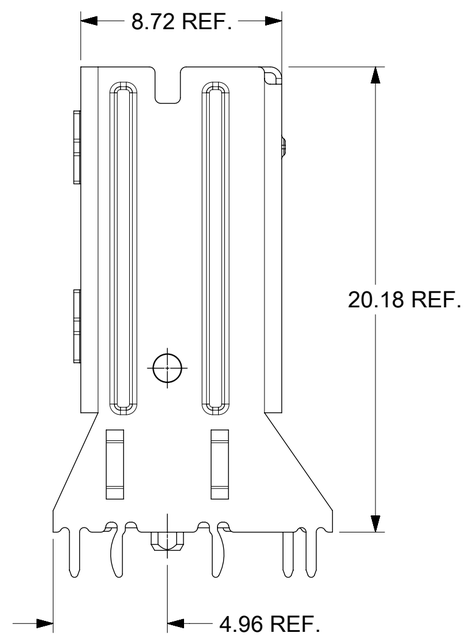

36 CIRCUIT
RETENTION FIT
SHELL OPTION SHOWN

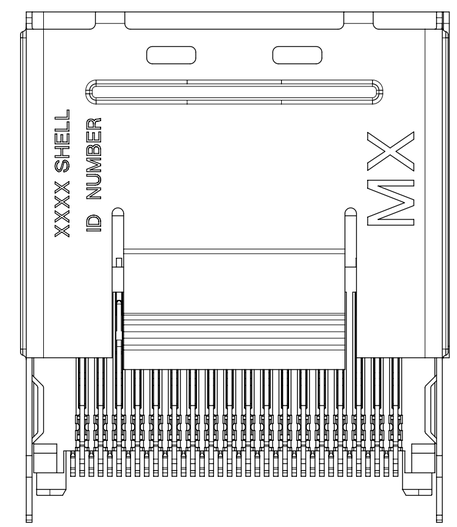

CIRCUIT SIZE	DIM 'A'	DIM 'B'	DIM 'C'
26	12.00	13.80	11.80
36	16.00	17.80	15.80
50	21.60	23.40	21.40
68	28.80	30.60	28.60

DOCUMENT STATUS	P1	RELEASE DATE	2021/09/08 12:08:25

iPass™ IS A TRADEMARK OF MOLEX

THIS DRAWING CONTAINS INFORMATION THAT IS PROPRIETARY TO MOLEX ELECTRONIC TECHNOLOGIES, LLC AND SHOULD NOT BE USED WITHOUT WRITTEN PERMISSION

DIMENSION UNITS	SCALE
mm	5:1

GENERAL TOLERANCES (UNLESS SPECIFIED)

ANGULAR TOL	±	0.5 °
4 PLACES	±	
3 PLACES	±	
2 PLACES	±	0.13
1 PLACE	±	0.25
0 PLACES	±	

DRAFT WHERE APPLICABLE MUST REMAIN WITHIN DIMENSIONS

CURRENT REV DESC: OBSOLETED PART NUMBER AS PER PCN#510579

EC NO: 675088
DRWN: SUGEEB 2021/08/03
CHK'D: GGA 2021/09/08
APPR: GGA 2021/09/08

INITIAL REVISION:
DRWN: KLANG 2005/04/15
APPR: RNELSON 2005/04/18

THIRD ANGLE PROJECTION | DRAWING: C-SIZE | SERIES: 75784

molex

I-PASS VERT CONNECTOR
INTERNAL ASSY W/SHELL 0.8MM PITCH I/O

PRODUCT CUSTOMER DRAWING

DOCUMENT NUMBER	DOC TYPE	DOC PART	REVISION
SD-75784-001	PSD	001	D6

MATERIAL NUMBER	CUSTOMER	SHEET NUMBER
SEE TABLE	GENERAL MARKET	1 OF 13

FORMAT: master-tb-prod-C
REVISION: J
DATE: 2020/01/14

ASSEMBLY WITH PRE-POSITIONING DEVICE

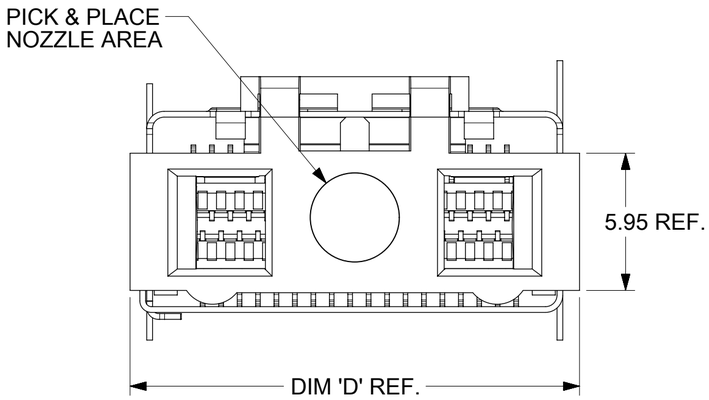

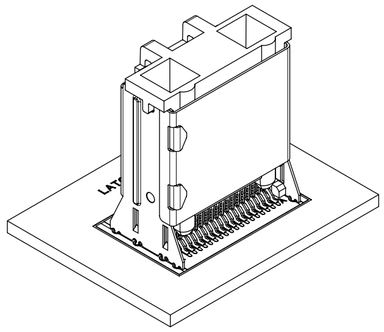

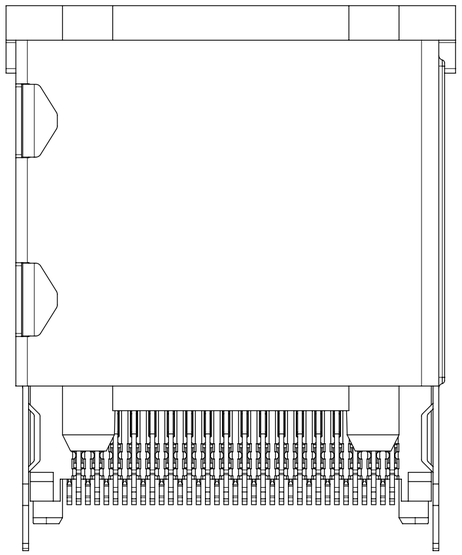

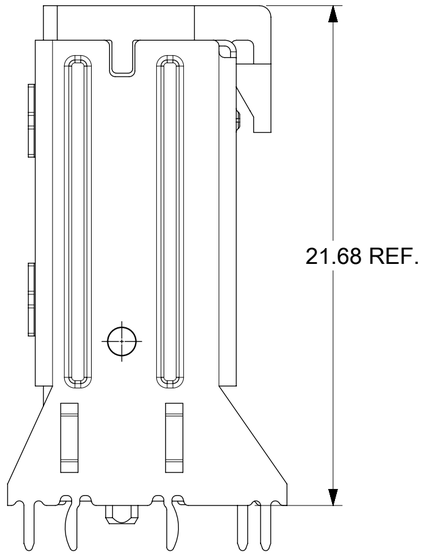

36 CIRCUIT RETENTION FIT SHOWN

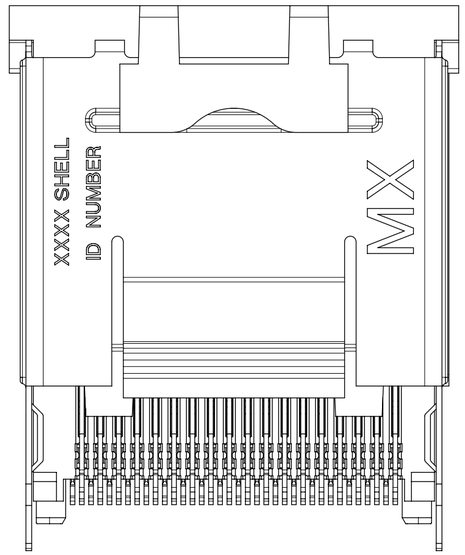

NOTES:
1. PICK AND PLACE LOCATION DEFINED ON APPLICATION SPECIFICATION AS-75783-001
2. PACKAGING CONSISTS OF CONNECTOR AND SHELL WITH A PRE-POSITIONING PICK AND PLACE DEVICE THAT ARE PACKAGED IN "TAPE AND REEL" FOR ROBOTIC PICK AND PLACE.

iPass™ IS A TRADEMARK OF MOLEX

CIRCUIT SIZE	DIM 'D'
26	15.50
36	19.50
50	25.10
68	32.30

THIS DRAWING CONTAINS INFORMATION THAT IS PROPRIETARY TO MOLEX ELECTRONIC TECHNOLOGIES, LLC AND SHOULD NOT BE USED WITHOUT WRITTEN PERMISSION

DIMENSION UNITS	SCALE
mm	5:1

GENERAL TOLERANCES (UNLESS SPECIFIED)

ANGULAR TOL	±	0.5 °
4 PLACES	±	
3 PLACES	±	
2 PLACES	±	0.13
1 PLACE	±	0.25
0 PLACES	±	

DRAFT WHERE APPLICABLE MUST REMAIN WITHIN DIMENSIONS

CURRENT REV DESC: OBSOLETED PART NUMBER AS PER PCN#510579

EC NO: 675088
DRWN: SUGEEB 2021/08/03
CHK'D: GGA 2021/09/08
APPR: GGA 2021/09/08

INITIAL REVISION:
DRWN: KLANG 2005/04/15
APPR: RNELSON 2005/04/18

THIRD ANGLE PROJECTION | DRAWING: C-SIZE | SERIES: 75784

molex

I-PASS VERT CONNECTOR
INTERNAL ASSY W/SHELL 0.8MM PITCH I/O

PRODUCT CUSTOMER DRAWING

DOCUMENT NUMBER	DOC TYPE	DOC PART	REVISION
SD-75784-001	PSD	001	D6

MATERIAL NUMBER	CUSTOMER	SHEET NUMBER
SEE TABLE	GENERAL MARKET	2 OF 13

DOCUMENT STATUS	P1	RELEASE DATE	2021/09/08 12:08:25

FORMAT: master-tb-prod-C
REVISION: J
DATE: 2020/01/14

SHELL PCB INTERFACE

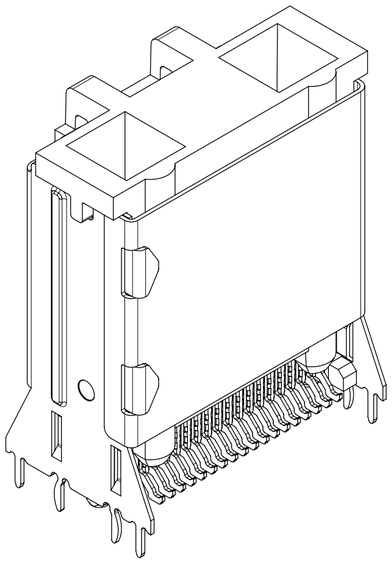

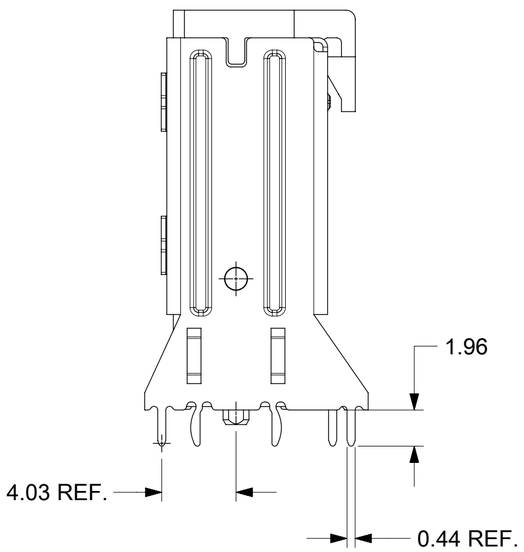

RETENTION-FIT
SHELL OPTION

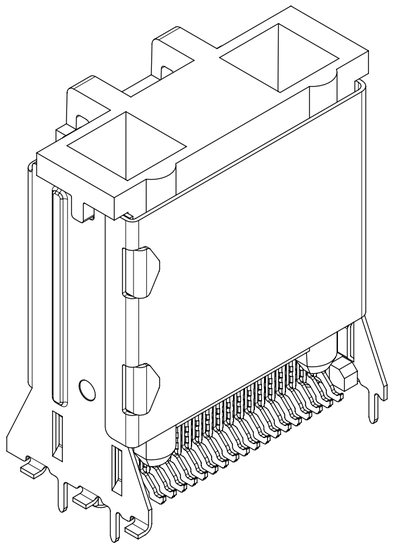

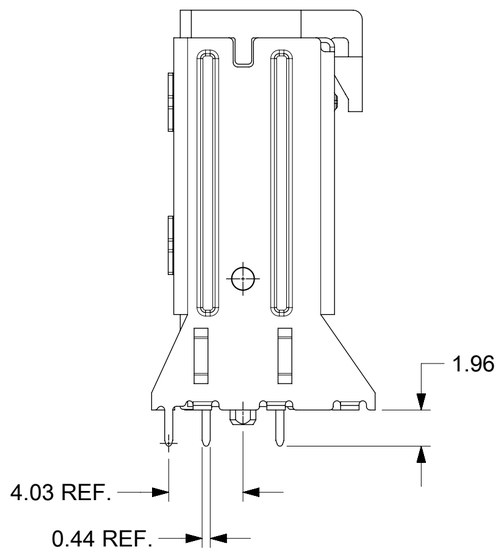

SMT SHELL OPTION

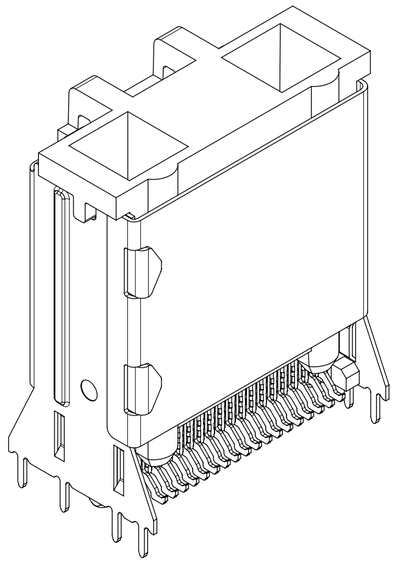

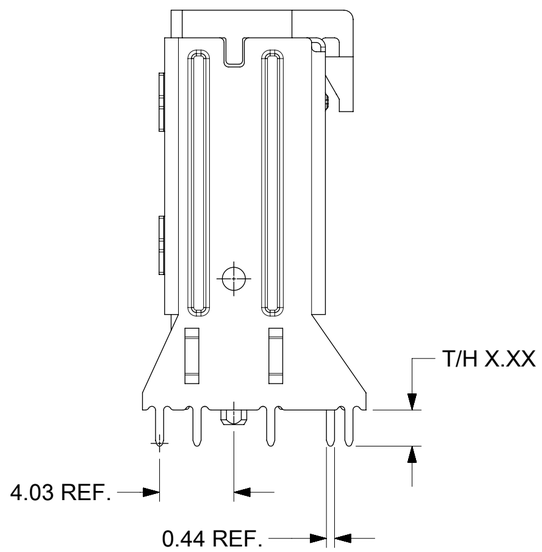

THRU-HOLE SHELL OPTION
SEE TABLE FOR LENGTH
(X.XX DENOTES LENGTH)

RECOMMENDED PCB THICKNESS
FOR SPECIFIED TAIL LENGTH

TAIL LENGTH	PCB THICKNESS
1.96	1.57 (.062)
2.79	2.36 (.093)
3.18	2.79 (.110)
3.56	3.18 (.125)

NOTE:
RETENTION FIT DENOTES TAILS THAT OFFER RETENTION
TO PCB DURING REFLOW PROCESS
SMT DENOTES SURFACE MOUNT TERMINATION
T/H X.XX DENOTES THRU-HOLE TAIL OF LENGTH X.XX

iPass™ IS A TRADEMARK OF MOLEX

THIS DRAWING CONTAINS INFORMATION THAT IS PROPRIETARY TO MOLEX ELECTRONIC TECHNOLOGIES, LLC AND SHOULD NOT BE USED WITHOUT WRITTEN PERMISSION

DIMENSION UNITS	SCALE
mm	4:1

GENERAL TOLERANCES (UNLESS SPECIFIED)

ANGULAR TOL	±	0.5 °
4 PLACES	±	
3 PLACES	±	
2 PLACES	±	0.13
1 PLACE	±	0.25
0 PLACES	±	

DRAFT WHERE APPLICABLE MUST REMAIN WITHIN DIMENSIONS

CURRENT REV DESC: OBSOLETED PART NUMBER AS PER PCN#510579

EC NO: 675088
DRWN: SUGEEB 2021/08/03
CHK'D: GGA 2021/09/08
APPR: GGA 2021/09/08

INITIAL REVISION:
DRWN: KLANG 2005/04/15
APPR: RNELSON 2005/04/18

THIRD ANGLE PROJECTION | DRAWING: C-SIZE | SERIES: 75784

molex

I-PASS VERT CONNECTOR
INTERNAL ASSY W/SHELL 0.8MM PITCH I/O

PRODUCT CUSTOMER DRAWING

DOCUMENT NUMBER	DOC TYPE	DOC PART	REVISION
SD-75784-001	PSD	001	D6

MATERIAL NUMBER	CUSTOMER	SHEET NUMBER
SEE TABLE	GENERAL MARKET	3 OF 13

DOCUMENT STATUS	P1	RELEASE DATE	2021/09/08 12:08:25

FORMAT: master-tb-prod-C
REVISION: J
DATE: 2020/01/14

KEYING OPTIONS

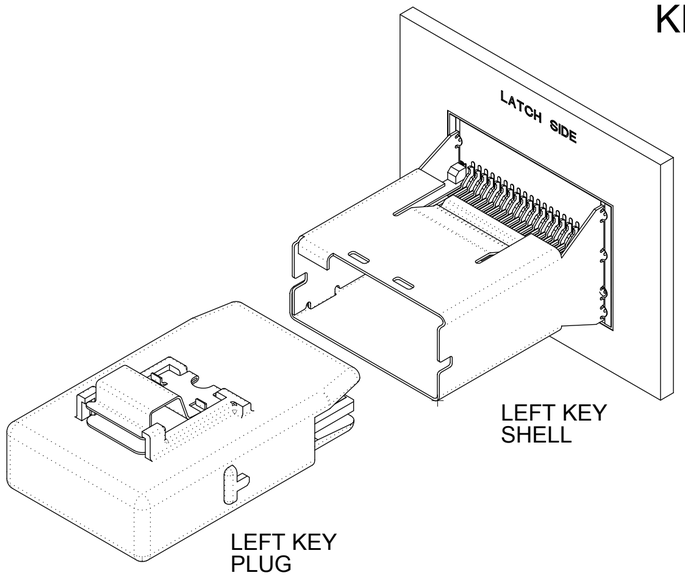

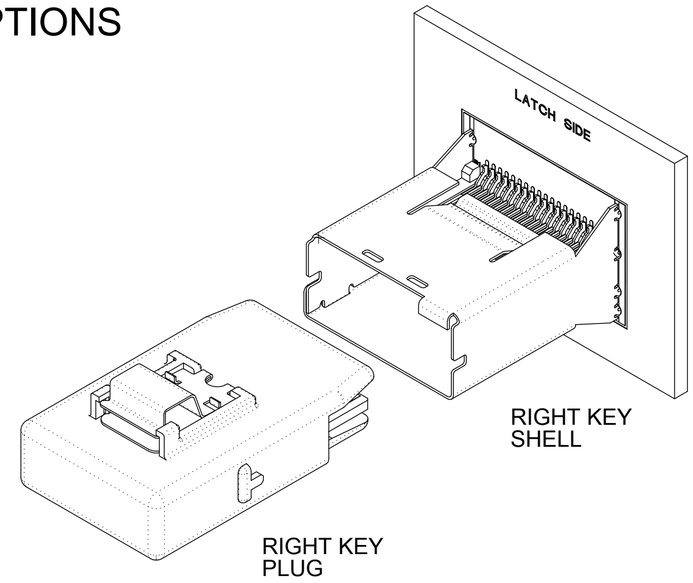

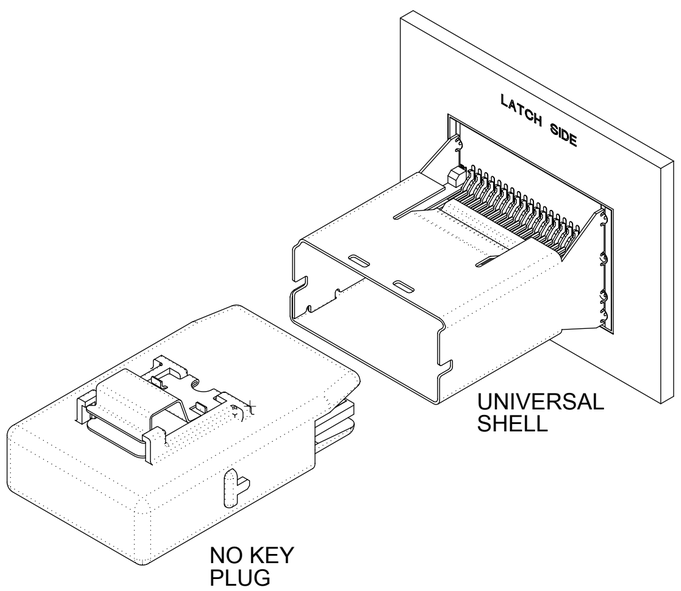

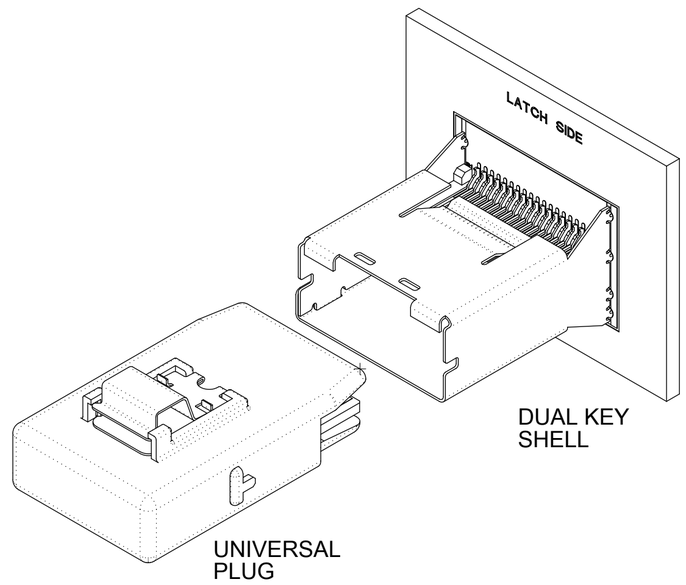

	UNIVERSAL SHELL	LEFT KEY SHELL	RIGHT KEY SHELL	DUAL KEY SHELL
NO KEY PLUG	YES	NO	NO	NO
LEFT KEY PLUG	YES	YES	NO	NO
RIGHT KEY PLUG	YES	NO	YES	NO
UNIVERSAL PLUG	YES	YES	YES	YES

iPass™ IS A TRADEMARK OF MOLEX

THIS DRAWING CONTAINS INFORMATION THAT IS PROPRIETARY TO MOLEX ELECTRONIC TECHNOLOGIES, LLC AND SHOULD NOT BE USED WITHOUT WRITTEN PERMISSION

DIMENSION UNITS	SCALE
mm	2:1

GENERAL TOLERANCES (UNLESS SPECIFIED)

ANGULAR TOL	±	0.5 °
4 PLACES	±	
3 PLACES	±	
2 PLACES	±	0.13
1 PLACE	±	0.25
0 PLACES	±	

DRAFT WHERE APPLICABLE MUST REMAIN WITHIN DIMENSIONS

CURRENT REV DESC: OBSOLETED PART NUMBER AS PER PCN#510579

EC NO: 675088
DRWN: SUGEEB 2021/08/03
CHK'D: GGA 2021/09/08
APPR: GGA 2021/09/08

INITIAL REVISION:
DRWN: KLANG 2005/04/15
APPR: RNELSON 2005/04/18

molex

I-PASS VERT CONNECTOR
INTERNAL ASSY W/SHELL 0.8MM PITCH I/O

PRODUCT CUSTOMER DRAWING

DOCUMENT NUMBER	DOC TYPE	DOC PART	REVISION
SD-75784-001	PSD	001	D6

THIRD ANGLE PROJECTION	DRAWING	SERIES	MATERIAL NUMBER	CUSTOMER	SHEET NUMBER
	C-SIZE	75784	SEE TABLE	GENERAL MARKET	4 OF 13

DOCUMENT STATUS	P1	RELEASE DATE	2021/09/08 12:08:25

FORMAT: master-tb-prod-C
REVISION: J
DATE: 2020/01/14

26 CIRCUIT ITEM NUMBERS

CIRCUIT SIZE	ITEM NUMBER	PLATING OPTION	SHELL PCB OPTION	SHELL KEY OPTION
26	75784-0007	OPTION 1	RETENTION	LEFT
26	75784-0012	OPTION 1	SMT	DUAL
26	75784-0025	OPTION 1	RETENTION	UNIVERSAL
26	75784-0026	OPTION 1	SMT	UNIVERSAL
26	75784-0028	OPTION 2	SMT	UNIVERSAL
26	75784-0032	OPTION 1	T/H 1.96	UNIVERSAL

CIRCUIT SIZE	ITEM NUMBER	PLATING OPTION	SHELL PCB OPTION	SHELL KEY OPTION
26	75784-0037	OPTION 1	T/H 2.79	LEFT
26	75784-0038	OPTION 1	T/H 2.79	RIGHT
26	75784-0039	OPTION 1	T/H 2.79	DUAL
26	75784-0040	OPTION 1	T/H 2.79	UNIVERSAL
26	75784-0041	OPTION 2	T/H 2.79	LEFT
26	75784-0042	OPTION 2	T/H 2.79	RIGHT
26	75784-0043	OPTION 2	T/H 2.79	DUAL
26	75784-0045	OPTION 1	T/H 3.18	LEFT
26	75784-0046	OPTION 1	T/H 3.18	RIGHT
26	75784-0047	OPTION 1	T/H 3.18	DUAL
26	75784-0048	OPTION 1	T/H 3.18	UNIVERSAL
26	75784-0049	OPTION 2	T/H 3.18	LEFT
26	75784-0050	OPTION 2	T/H 3.18	RIGHT
26	75784-0051	OPTION 2	T/H 3.18	DUAL
26	75784-0052	OPTION 2	T/H 3.18	UNIVERSAL

iPass™ IS A TRADEMARK OF MOLEX

THIS DRAWING CONTAINS INFORMATION THAT IS PROPRIETARY TO MOLEX ELECTRONIC TECHNOLOGIES, LLC AND SHOULD NOT BE USED WITHOUT WRITTEN PERMISSION

DIMENSION UNITS	SCALE
mm	1:1

GENERAL TOLERANCES (UNLESS SPECIFIED)

ANGULAR TOL	±	0.5 °
4 PLACES	±	
3 PLACES	±	
2 PLACES	±	0.13
1 PLACE	±	0.25
0 PLACES	±	

DRAFT WHERE APPLICABLE MUST REMAIN WITHIN DIMENSIONS

CURRENT REV DESC: OBSOLETED PART NUMBER AS PER PCN#510579

EC NO: 675088
DRWN: SUGEEB 2021/08/03
CHK'D: GGA 2021/09/08
APPR: GGA 2021/09/08

INITIAL REVISION:
DRWN: KLANG 2005/04/15
APPR: RNELSON 2005/04/18

THIRD ANGLE PROJECTION | DRAWING: C-SIZE | SERIES: 75784

molex

I-PASS VERT CONNECTOR
INTERNAL ASSY W/SHELL 0.8MM PITCH I/O

PRODUCT CUSTOMER DRAWING

DOCUMENT NUMBER	DOC TYPE	DOC PART	REVISION
SD-75784-001	PSD	001	D6

MATERIAL NUMBER	CUSTOMER	SHEET NUMBER
SEE TABLE	GENERAL MARKET	5 OF 13

DOCUMENT STATUS	P1	RELEASE DATE	2021/09/08 12:08:25

FORMAT: master-tb-prod-C
REVISION: J
DATE: 2020/01/14

36 CIRCUIT ITEM NUMBERS

CIRCUIT SIZE	ITEM NUMBER	PLATING OPTION	SHELL PCB OPTION	SHELL KEY OPTION
36	75784-0109	OPTION 1	RETENTION	DUAL
36	75784-0110	OPTION 1	SMT	LEFT
36	75784-0111	OPTION 1	SMT	RIGHT
36	75784-0112	OPTION 1	SMT	DUAL
36	75784-0119	OPTION 2	RETENTION	LEFT
36	75784-0120	OPTION 2	RETENTION	RIGHT
36	75784-0121	OPTION 2	RETENTION	DUAL
36	75784-0125	OPTION 1	RETENTION	UNIVERSAL
36	75784-0126	OPTION 1	SMT	UNIVERSAL
36	75784-0127	OPTION 2	RETENTION	UNIVERSAL
36	75784-0131	OPTION 1	T/H 1.96	DUAL
36	75784-0132	OPTION 1	T/H 1.96	UNIVERSAL
36	75784-0136	OPTION 2	T/H 1.96	UNIVERSAL

CIRCUIT SIZE	ITEM NUMBER	PLATING OPTION	SHELL PCB OPTION	SHELL KEY OPTION
36	75784-0137	OPTION 1	T/H 2.79	LEFT
36	75784-0138	OPTION 1	T/H 2.79	RIGHT
36	75784-0139	OPTION 1	T/H 2.79	DUAL
36	75784-0140	OPTION 1	T/H 2.79	UNIVERSAL
36	75784-0141	OPTION 2	T/H 2.79	LEFT
36	75784-0142	OPTION 2	T/H 2.79	RIGHT
36	75784-0143	OPTION 2	T/H 2.79	DUAL
36	75784-0144	OPTION 2	T/H 2.79	UNIVERSAL
36	75784-0147	OPTION 1	T/H 3.18	DUAL
36	75784-0148	OPTION 1	T/H 3.18	UNIVERSAL
36	75784-0150	OPTION 2	T/H 3.18	RIGHT
36	75784-0151	OPTION 2	T/H 3.18	DUAL
36	75784-0152	OPTION 2	T/H 3.18	UNIVERSAL
36	75784-0156	OPTION 1	T/H 3.56	UNIVERSAL
36	75784-0159	OPTION 2	T/H 3.56	DUAL
36	75784-0160	OPTION 2	T/H 3.56	UNIVERSAL

iPass™ IS A TRADEMARK OF MOLEX

THIS DRAWING CONTAINS INFORMATION THAT IS PROPRIETARY TO MOLEX ELECTRONIC TECHNOLOGIES, LLC AND SHOULD NOT BE USED WITHOUT WRITTEN PERMISSION

DIMENSION UNITS	SCALE
mm	1:1

GENERAL TOLERANCES (UNLESS SPECIFIED)

ANGULAR TOL	±	0.5 °
4 PLACES	±	
3 PLACES	±	
2 PLACES	±	0.13
1 PLACE	±	0.25
0 PLACES	±	

DRAFT WHERE APPLICABLE MUST REMAIN WITHIN DIMENSIONS

CURRENT REV DESC: OBSOLETED PART NUMBER AS PER PCN#510579

EC NO: 675088
DRWN: SUGEEB 2021/08/03
CHK'D: GGA 2021/09/08
APPR: GGA 2021/09/08

INITIAL REVISION:
DRWN: KLANG 2005/04/15
APPR: RNELSON 2005/04/18

THIRD ANGLE PROJECTION | DRAWING: C-SIZE | SERIES: 75784

molex

I-PASS VERT CONNECTOR
INTERNAL ASSY W/SHELL 0.8MM PITCH I/O

PRODUCT CUSTOMER DRAWING

DOCUMENT NUMBER	DOC TYPE	DOC PART	REVISION
SD-75784-001	PSD	001	D6

MATERIAL NUMBER	CUSTOMER	SHEET NUMBER
SEE TABLE	GENERAL MARKET	6 OF 13

DOCUMENT STATUS	P1	RELEASE DATE	2021/09/08 12:08:25

FORMAT: master-tb-prod-C
REVISION: J
DATE: 2020/01/14

50 CIRCUIT ITEM NUMBERS

CIRCUIT SIZE	ITEM NUMBER	PLATING OPTION	SHELL PCB OPTION	SHELL KEY OPTION
50	75784-0232	OPTION 1	T/H 1.96	UNIVERSAL

CIRCUIT SIZE	ITEM NUMBER	PLATING OPTION	SHELL PCB OPTION	SHELL KEY OPTION
50	75784-0240	OPTION 1	T/H 2.79	UNIVERSAL
50	75784-0244	OPTION 2	T/H 2.79	UNIVERSAL
50	75784-0252	OPTION 2	T/H 3.18	UNIVERSAL

iPass™ IS A TRADEMARK OF MOLEX

THIS DRAWING CONTAINS INFORMATION THAT IS PROPRIETARY TO MOLEX ELECTRONIC TECHNOLOGIES, LLC AND SHOULD NOT BE USED WITHOUT WRITTEN PERMISSION

DIMENSION UNITS	SCALE
mm	1:1

GENERAL TOLERANCES (UNLESS SPECIFIED)

ANGULAR TOL	±	0.5 °
4 PLACES	±	
3 PLACES	±	
2 PLACES	±	0.13
1 PLACE	±	0.25
0 PLACES	±	

DRAFT WHERE APPLICABLE MUST REMAIN WITHIN DIMENSIONS

CURRENT REV DESC: OBSOLETED PART NUMBER AS PER PCN#510579

EC NO: 675088
DRWN: SUGEEB 2021/08/03
CHK'D: GGA 2021/09/08
APPR: GGA 2021/09/08

INITIAL REVISION:
DRWN: KLANG 2005/04/15
APPR: RNELSON 2005/04/18

THIRD ANGLE PROJECTION | DRAWING: C-SIZE | SERIES: 75784

molex

I-PASS VERT CONNECTOR
INTERNAL ASSY W/SHELL 0.8MM PITCH I/O

PRODUCT CUSTOMER DRAWING

DOCUMENT NUMBER	DOC TYPE	DOC PART	REVISION
SD-75784-001	PSD	001	D6

MATERIAL NUMBER	CUSTOMER	SHEET NUMBER
SEE TABLE	GENERAL MARKET	7 OF 13

DOCUMENT STATUS	P1	RELEASE DATE	2021/09/08 12:08:25

68 CIRCUIT ITEM NUMBERS

CIRCUIT SIZE	ITEM NUMBER	PLATING OPTION	SHELL PCB OPTION	SHELL KEY OPTION
68	75784-0332	OPTION 1	T/H 1.96	UNIVERSAL
68	75784-0336	OPTION 2	T/H 1.96	UNIVERSAL

CIRCUIT SIZE	ITEM NUMBER	PLATING OPTION	SHELL PCB OPTION	SHELL KEY OPTION
68	75784-0338	OPTION 1	T/H 2.79	RIGHT
68	75784-0340	OPTION 1	T/H 2.79	UNIVERSAL
68	75784-0344	OPTION 2	T/H 2.79	UNIVERSAL
68	75784-0348	OPTION 1	T/H 3.18	UNIVERSAL
68	75784-0352	OPTION 2	T/H 3.18	UNIVERSAL

iPass™ IS A TRADEMARK OF MOLEX

THIS DRAWING CONTAINS INFORMATION THAT IS PROPRIETARY TO MOLEX ELECTRONIC TECHNOLOGIES, LLC AND SHOULD NOT BE USED WITHOUT WRITTEN PERMISSION

DIMENSION UNITS	SCALE
mm	1:1

GENERAL TOLERANCES (UNLESS SPECIFIED)

ANGULAR TOL	±	0.5 °
4 PLACES	±	
3 PLACES	±	
2 PLACES	±	0.13
1 PLACE	±	0.25
0 PLACES	±	

DRAFT WHERE APPLICABLE MUST REMAIN WITHIN DIMENSIONS

CURRENT REV DESC: OBSOLETED PART NUMBER AS PER PCN#510579

EC NO: 675088
DRWN: SUGEEB 2021/08/03
CHK'D: GGA 2021/09/08
APPR: GGA 2021/09/08

INITIAL REVISION:
DRWN: KLANG 2005/04/15
APPR: RNELSON 2005/04/18

THIRD ANGLE PROJECTION | DRAWING: C-SIZE | SERIES: 75784

molex

I-PASS VERT CONNECTOR
INTERNAL ASSY W/SHELL 0.8MM PITCH I/O

PRODUCT CUSTOMER DRAWING

DOCUMENT NUMBER	DOC TYPE	DOC PART	REVISION
SD-75784-001	PSD	001	D6

MATERIAL NUMBER	CUSTOMER	SHEET NUMBER
SEE TABLE	GENERAL MARKET	8 OF 13

DOCUMENT STATUS	P1	RELEASE DATE	2021/09/08 12:08:25

FORMAT: master-tb-prod-C
REVISION: J
DATE: 2020/01/14

VERTICAL CONNECTOR
WITH RETENTION FIT & THRU-HOLE SHELL
PCB FOOT PRINT

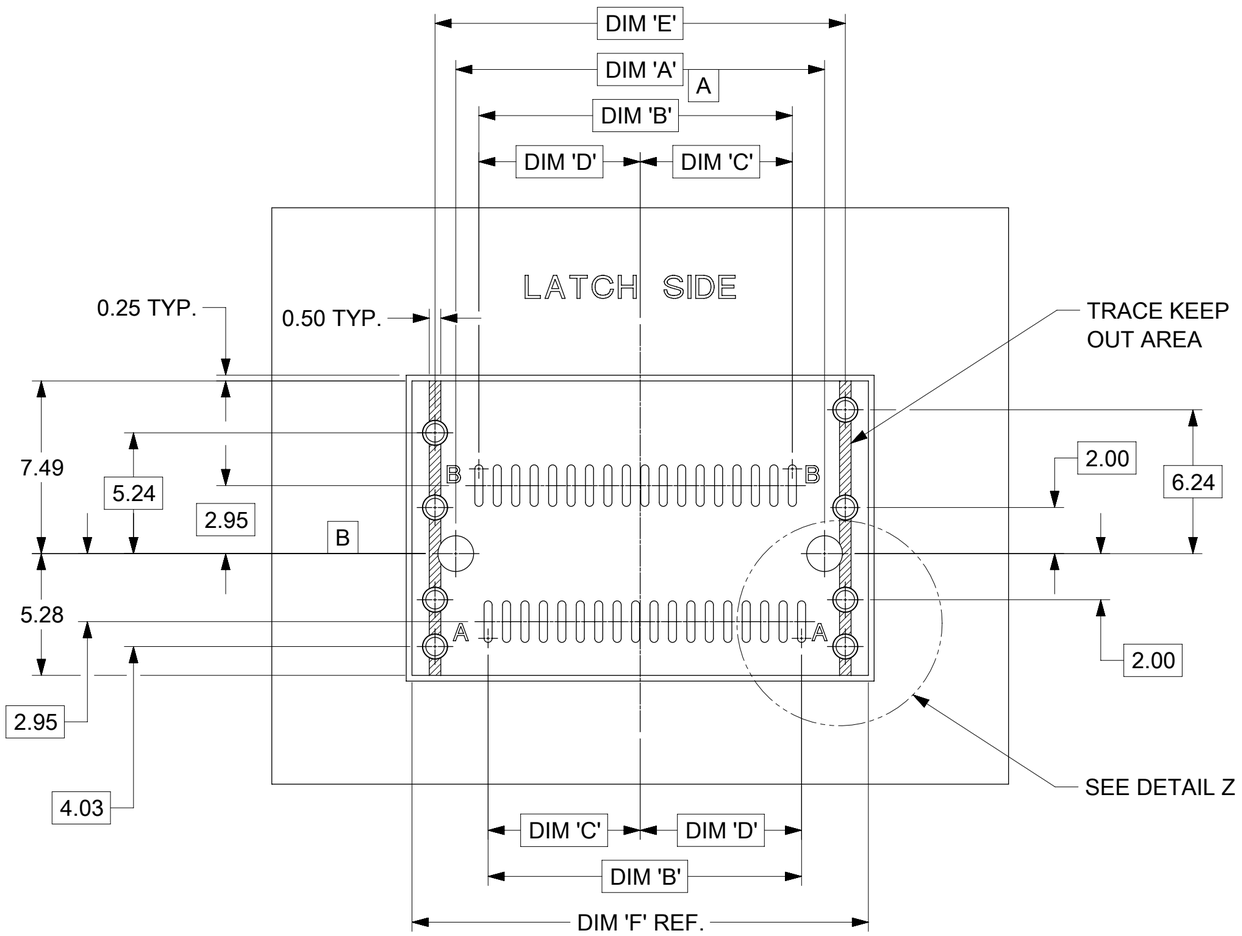

36 CIRCUIT SHOWN

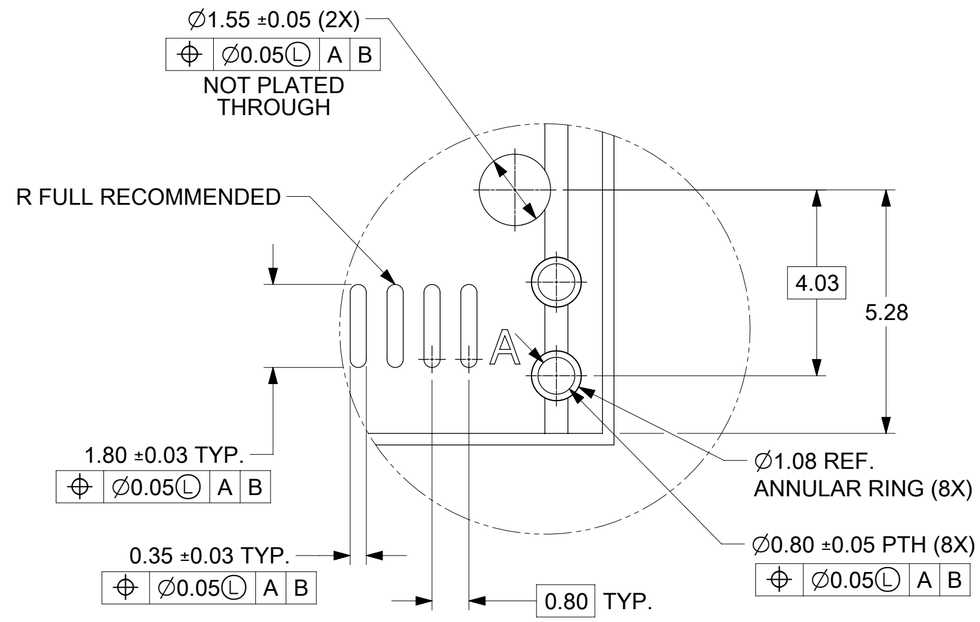

DETAIL Z
SCALE 10:1

CIRCUIT SIZE	PEG TO PEG DIM 'A'	FIRST TO LAST PAD DIM 'B'	CENTERLINE TO PAD DIM 'C'	CENTERLINE TO PAD DIM 'D'	SHELL PEG TO PEG DIM 'E'	SHELL FOOTPRINT WIDTH DIM 'F'
26	12.00	9.60	4.60	5.00	13.80	15.80
36	16.00	13.60	6.60	7.00	17.80	19.80
50	21.60	19.20	9.40	9.80	23.40	25.40
68	28.80	26.40	13.00	13.40	30.60	32.60

iPass™ IS A TRADEMARK OF MOLEX

THIS DRAWING CONTAINS INFORMATION THAT IS PROPRIETARY TO MOLEX ELECTRONIC TECHNOLOGIES, LLC AND SHOULD NOT BE USED WITHOUT WRITTEN PERMISSION

DIMENSION UNITS: mm	SCALE: 5:1	CURRENT REV DESC: OBSOLETED PART NUMBER AS PER PCN#510579	molex
GENERAL TOLERANCES (UNLESS SPECIFIED)			I-PASS VERT CONNECTOR INTERNAL ASSY W/SHELL 0.8MM PITCH I/O
ANGULAR TOL ± 0.5 °		EC NO: 675088	
4 PLACES ±		DRWN: SUGEEB 2021/08/03	
3 PLACES ±		CHK'D: GGA 2021/09/08	
2 PLACES ± 0.13		APPR: GGA 2021/09/08	PRODUCT CUSTOMER DRAWING
1 PLACE ± 0.25		INITIAL REVISION: DRWN: KLANG 2005/04/15	DOCUMENT NUMBER: SD-75784-001 · DOC TYPE: PSD · DOC PART: 001 · REVISION: D6
0 PLACES ±		APPR: RNELSON 2005/04/18	
DRAFT WHERE APPLICABLE MUST REMAIN WITHIN DIMENSIONS	THIRD ANGLE PROJECTION	DRAWING: C-SIZE · SERIES: 75784	MATERIAL NUMBER: SEE TABLE · CUSTOMER: GENERAL MARKET · SHEET NUMBER: 9 OF 13

DOCUMENT STATUS	P1	RELEASE DATE	2021/09/08 12:08:25

FORMAT: master-tb-prod-C
REVISION: J
DATE: 2020/01/14

VERTICAL CONNECTOR
WITH SMT SHELL
PCB FOOT PRINT

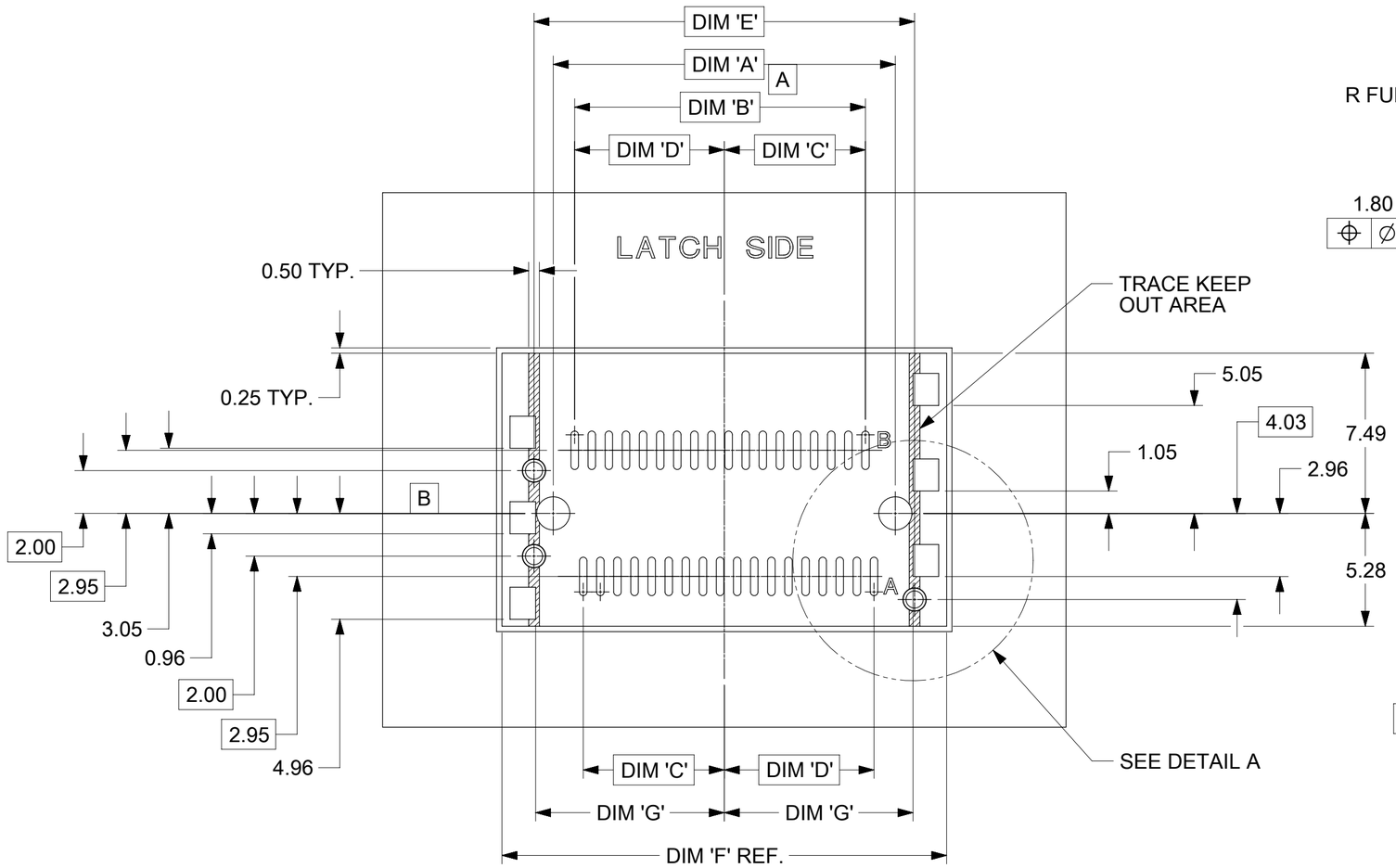

36 CIRCUIT SHOWN

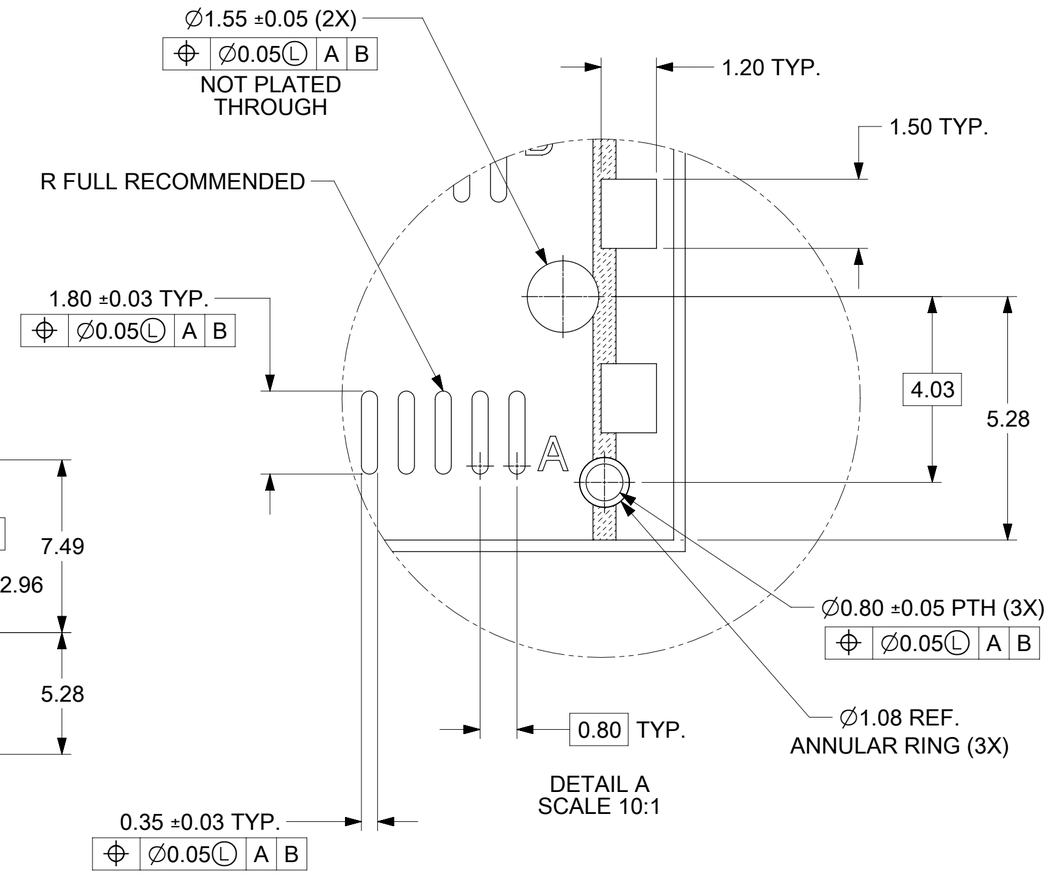

DETAIL A
SCALE 10:1

CIRCUIT SIZE	PEG TO PEG DIM 'A'	FIRST TO LAST PAD DIM 'B'	CENTERLINE TO PAD DIM 'C'	CENTERLINE TO PAD DIM 'D'	SHELL PEG TO PEG DIM 'E'	SHELL FOOTPRINT WIDTH DIM 'F'	CENTERLINE TO PAD EDGE DIM 'G'
26	12.00	9.60	4.60	5.00	13.80	16.80	6.825
36	16.00	13.60	6.60	7.00	17.80	20.80	8.825
50	21.60	19.20	9.40	9.80	23.40	26.40	11.625
68	28.80	26.40	13.00	13.40	30.60	33.60	15.225

iPass™ IS A TRADEMARK OF MOLEX

THIS DRAWING CONTAINS INFORMATION THAT IS PROPRIETARY TO MOLEX ELECTRONIC TECHNOLOGIES, LLC AND SHOULD NOT BE USED WITHOUT WRITTEN PERMISSION

DIMENSION UNITS	SCALE
mm	5:1

GENERAL TOLERANCES (UNLESS SPECIFIED)

ANGULAR TOL	±	0.5 °
4 PLACES	±	
3 PLACES	±	
2 PLACES	±	0.13
1 PLACE	±	0.25
0 PLACES	±	

DRAFT WHERE APPLICABLE MUST REMAIN WITHIN DIMENSIONS

CURRENT REV DESC: OBSOLETED PART NUMBER AS PER PCN#510579

EC NO: 675088
DRWN: SUGEEB 2021/08/03
CHK'D: GGA 2021/09/08
APPR: GGA 2021/09/08

INITIAL REVISION:
DRWN: KLANG 2005/04/15
APPR: RNELSON 2005/04/18

THIRD ANGLE PROJECTION

DRAWING: C-SIZE
SERIES: 75784

molex

I-PASS VERT CONNECTOR
INTERNAL ASSY W/SHELL 0.8MM PITCH I/O

PRODUCT CUSTOMER DRAWING

DOCUMENT NUMBER	DOC TYPE	DOC PART	REVISION
SD-75784-001	PSD	001	D6

MATERIAL NUMBER	CUSTOMER	SHEET NUMBER
SEE TABLE	GENERAL MARKET	10 OF 13

DOCUMENT STATUS	P1	RELEASE DATE	2021/09/08 12:08:25

FORMAT: master-tb-prod-C REVISION: J DATE: 2020/01/14

VERTICAL CONNECTOR WITH SHELL
PCB FOOT PRINT DESCRIPTIONS

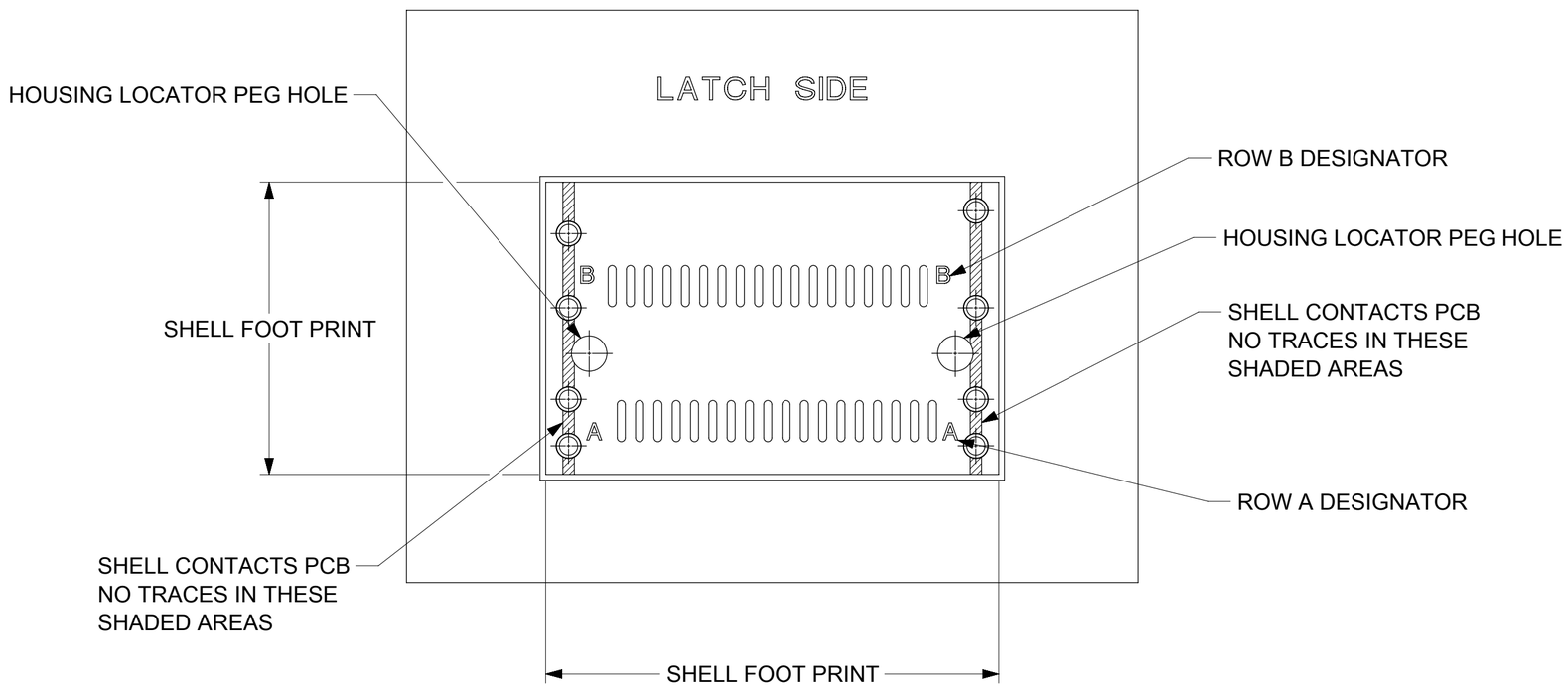

36 CIRCUIT SHOWN

iPass™ IS A TRADEMARK OF MOLEX

THIS DRAWING CONTAINS INFORMATION THAT IS PROPRIETARY TO MOLEX ELECTRONIC TECHNOLOGIES, LLC AND SHOULD NOT BE USED WITHOUT WRITTEN PERMISSION

DIMENSION UNITS	SCALE
mm	5:1

GENERAL TOLERANCES (UNLESS SPECIFIED)		
ANGULAR TOL	±	0.5 °
4 PLACES	±	
3 PLACES	±	
2 PLACES	±	0.13
1 PLACE	±	0.25
0 PLACES	±	

DRAFT WHERE APPLICABLE MUST REMAIN WITHIN DIMENSIONS

CURRENT REV DESC: OBSOLETED PART NUMBER AS PER PCN#510579

EC NO: 675088
DRWN: SUGEEB 2021/08/03
CHK'D: GGA 2021/09/08
APPR: GGA 2021/09/08

INITIAL REVISION:
DRWN: KLANG 2005/04/15
APPR: RNELSON 2005/04/18

THIRD ANGLE PROJECTION | DRAWING: C-SIZE | SERIES: 75784

molex

I-PASS VERT CONNECTOR
INTERNAL ASSY W/SHELL 0.8MM PITCH I/O

PRODUCT CUSTOMER DRAWING

DOCUMENT NUMBER	DOC TYPE	DOC PART	REVISION
SD-75784-001	PSD	001	D6

MATERIAL NUMBER	CUSTOMER	SHEET NUMBER
SEE TABLE	GENERAL MARKET	11 OF 13

DOCUMENT STATUS	P1	RELEASE DATE	2021/09/08 12:08:25

FORMAT: master-tb-prod-C
REVISION: J
DATE: 2020/01/14

MATING INTERFACE (FOR REFERENCE ONLY)

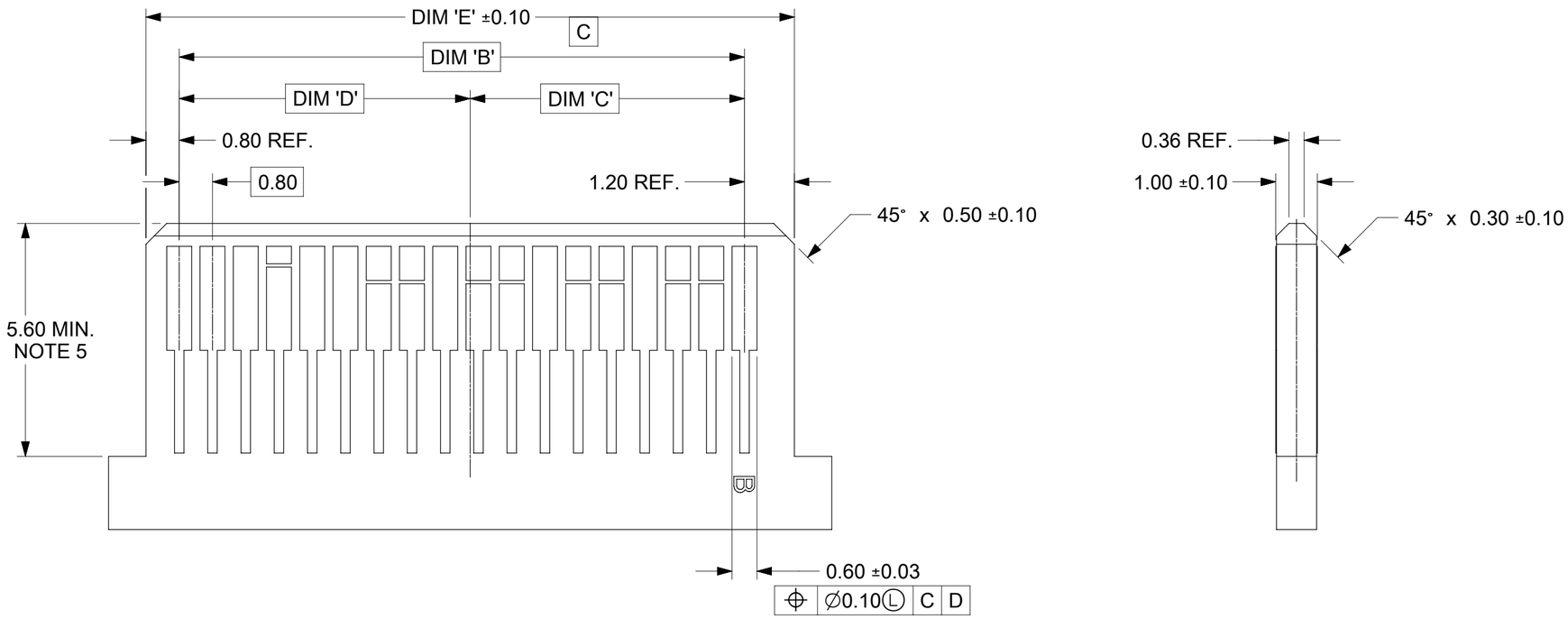

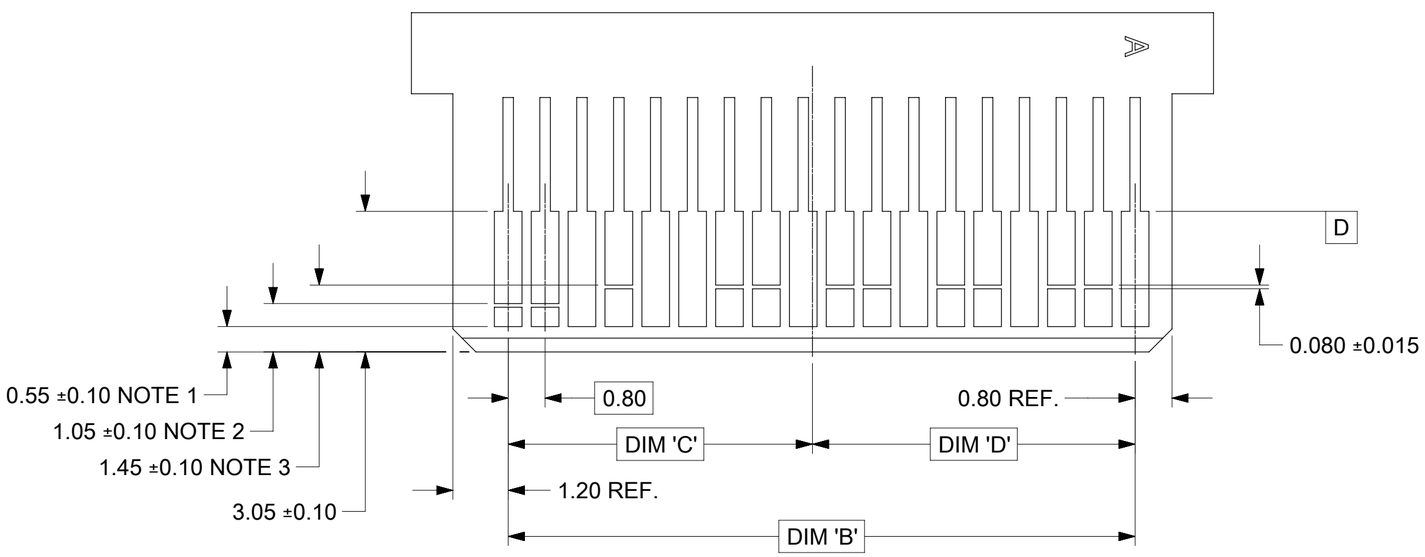

36 CIRCUIT SHOWN

NOTES:
1. PAD CONFIGURATION FOR FIRST MATE.
2. PAD CONFIGURATION FOR SECOND MATE.
3. PAD CONFIGURATION FOR THIRD MATE. (HIGH SPEED SIGNALS)
4. FOR PIN ASSIGNMENTS AND MATING SEQUENCE (1ST, 2ND, 3RD), SEE APPLICABLE SPECIFICATION.
5. MINIMUM STEP REQUIRED IF PCB MADE WIDER THAN TONGUE.

CIRCUIT SIZE	TERM/SIDE 'N'	DIM 'B'	DIM 'C'	DIM 'D'	DIM 'E'
26	13	9.60	4.60	5.00	11.60
36	18	13.60	6.60	7.00	15.60
50	25	19.20	9.40	9.80	21.20
68	34	26.40	13.00	13.40	28.40

iPass™ IS A TRADEMARK OF MOLEX

THIS DRAWING CONTAINS INFORMATION THAT IS PROPRIETARY TO MOLEX ELECTRONIC TECHNOLOGIES, LLC AND SHOULD NOT BE USED WITHOUT WRITTEN PERMISSION

DIMENSION UNITS	SCALE
mm	1:1

GENERAL TOLERANCES (UNLESS SPECIFIED)

ANGULAR TOL	±	0.5 °
4 PLACES	±	
3 PLACES	±	
2 PLACES	±	0.13
1 PLACE	±	0.25
0 PLACES	±	

DRAFT WHERE APPLICABLE MUST REMAIN WITHIN DIMENSIONS

CURRENT REV DESC: OBSOLETED PART NUMBER AS PER PCN#510579

EC NO: 675088
DRWN: SUGEEB 2021/08/03
CHK'D: GGA 2021/09/08
APPR: GGA 2021/09/08

INITIAL REVISION:
DRWN: KLANG 2005/04/15
APPR: RNELSON 2005/04/18

molex

I-PASS VERT CONNECTOR
INTERNAL ASSY W/SHELL 0.8MM PITCH I/O

PRODUCT CUSTOMER DRAWING

DOCUMENT NUMBER	DOC TYPE	DOC PART	REVISION
SD-75784-001	PSD	001	D6

THIRD ANGLE PROJECTION	DRAWING	SERIES	MATERIAL NUMBER	CUSTOMER	SHEET NUMBER
	C-SIZE	75784	SEE TABLE	GENERAL MARKET	12 OF 13

DOCUMENT STATUS	P1	RELEASE DATE	2021/09/08 12:08:25

FORMAT: master-tb-prod-C REVISION: J DATE: 2020/01/14

REVISION DESCRIPTION

REV	DATE	DESCRIPTION
D5	2019/4/17	DRAWING MIGRATION TO ECTR
D6	2021/08/03	OBSOLETED PART NUMBERS: 757840008,757840019,757840020,757840021,757840022,757840023,757840024,757840029,757840030,757840031,757840033, 757840034,757840035,757840107,757840108,757840130,757840135,757840145,757840146,757840149,757840153,757840154, 757840155,757840157,757840158,757840207,757840209,757840210,757840211,757840219,757840220,757840221,757840222, 757840223,757840224,757840227,757840228,757840229,757840230,757840231,757840233,757840234,757840235,757840236, 757840237,757840238,757840239,757840241,757840242,757840243,757840246,757840247,757840248,757840249,757840250, 757840251,757840309,757840310,757840311,757840312,757840319,757840321,757840322,757840323,757840325,757840331, 757840335,757840339,757840341,757840342,757840343,757840345,757840346,757840347,757840349,757840350

THIS DRAWING CONTAINS INFORMATION THAT IS PROPRIETARY TO MOLEX ELECTRONIC TECHNOLOGIES, LLC AND SHOULD NOT BE USED WITHOUT WRITTEN PERMISSION

DIMENSION UNITS	SCALE
mm	1:1

GENERAL TOLERANCES (UNLESS SPECIFIED)

ANGULAR TOL	±	0.5 °
4 PLACES	±	
3 PLACES	±	
2 PLACES	±	0.13
1 PLACE	±	0.25
0 PLACES	±	

DRAFT WHERE APPLICABLE MUST REMAIN WITHIN DIMENSIONS

CURRENT REV DESC: OBSOLETED PART NUMBER AS PER PCN#510579

EC NO: 675088
DRWN: SUGEEB 2021/08/03
CHK'D: GGA 2021/09/08
APPR: GGA 2021/09/08

INITIAL REVISION:
DRWN: KLANG 2005/04/15
APPR: RNELSON 2005/04/18

THIRD ANGLE PROJECTION | DRAWING: C-SIZE | SERIES: 75784

molex

I-PASS VERT CONNECTOR
INTERNAL ASSY W/SHELL 0.8MM PITCH I/O

PRODUCT CUSTOMER DRAWING

DOCUMENT NUMBER	DOC TYPE	DOC PART	REVISION
SD-75784-001	PSD	001	D6

MATERIAL NUMBER	CUSTOMER	SHEET NUMBER
SEE TABLE	GENERAL MARKET	13 OF 13

DOCUMENT STATUS	P1	RELEASE DATE	2021/09/08 12:08:25

FORMAT: master-tb-prod-C
REVISION: J
DATE: 2020/01/14