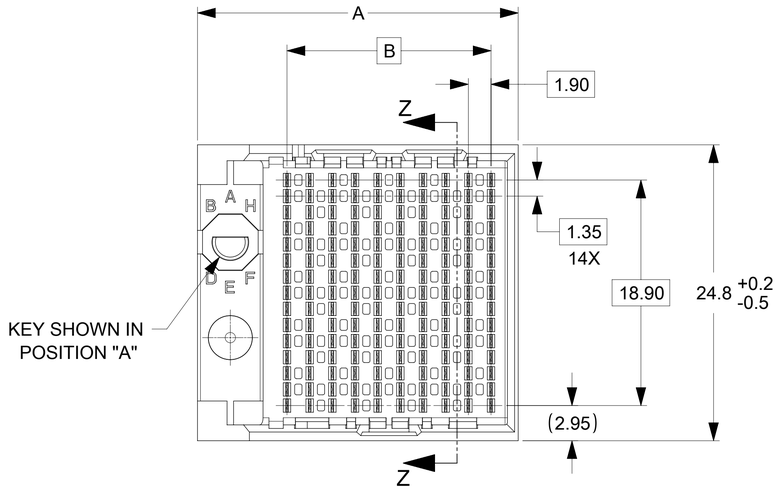

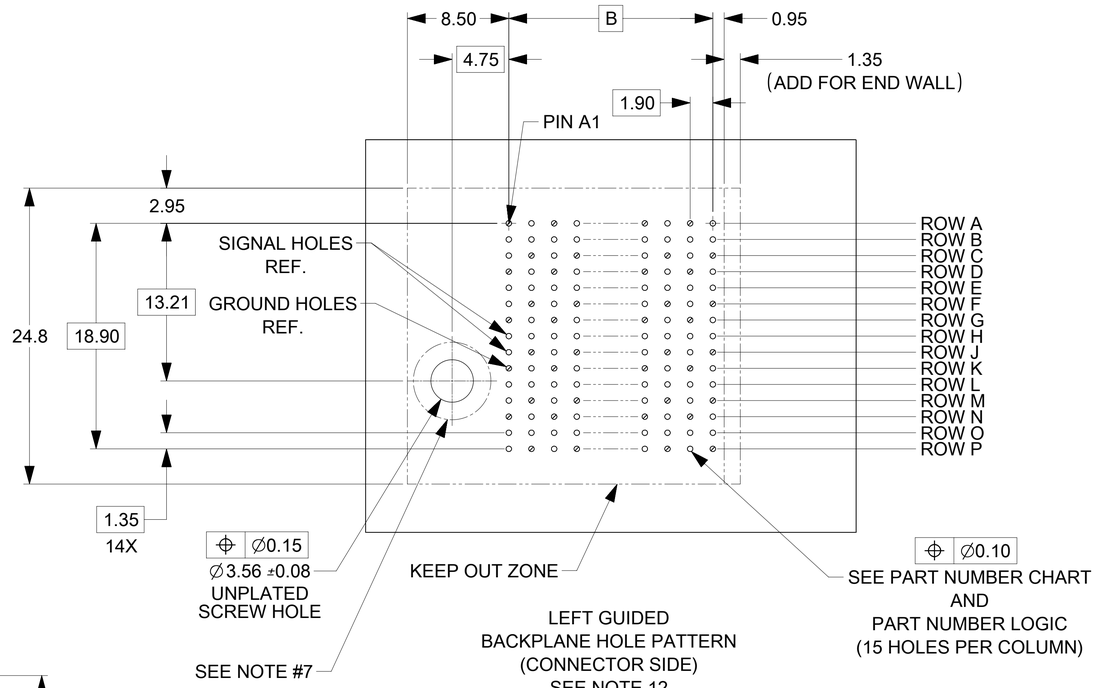

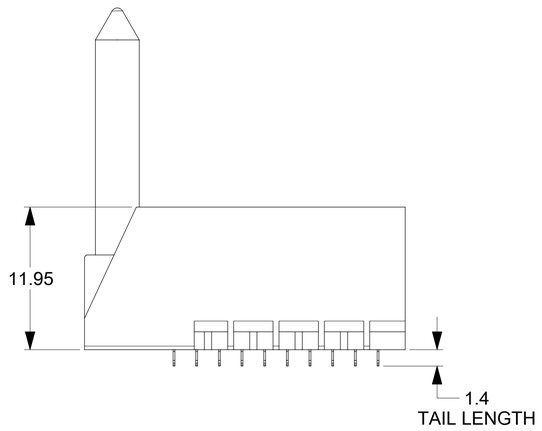

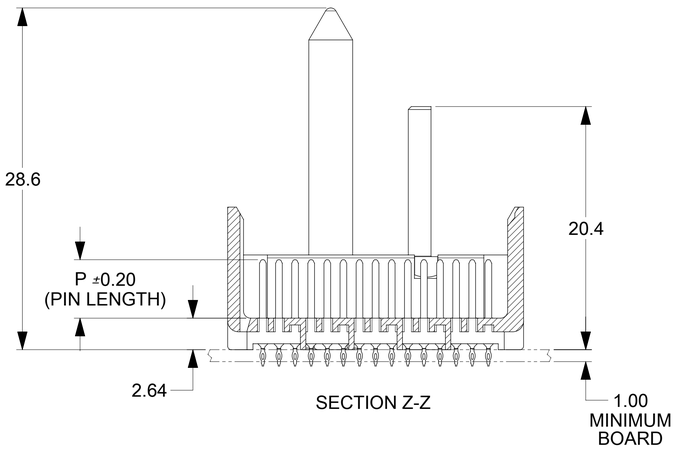

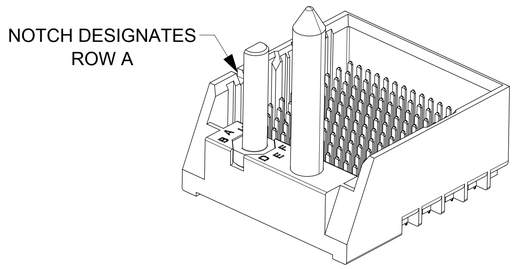

NOTES:
1. MATERIALS: HOUSING - LIQUID CRYSTAL POLYMER (LCP)
   GLASS-FILLED, UL94V-0
   TERMINALS - HIGH PERFORMANCE COPPER ALLOY
2. FINISH: 30µ MIN. GOLD IN CONTACT AREA.
   SELECTIVE TIN ON PCB TAILS.
   NICKEL OVERALL.
3. REFER TO MOLEX PRODUCT SPECIFICATION PS-76060-999
   FOR PERFORMANCE SPECIFICATIONS AND ADDITIONAL PCB INFORMATION.
4. THIS PART CONFORMS TO CLASS B REQUIREMENTS OF
   MOLEX COSMETIC SPEC PS-45499-002.
5. PACKAGE PER: PK-70873-759.
6. SEE SHEETS 2 & 3 FOR PART NUMBERS AND BOARD RELATIONSHIPS.
7. FOR GROUNDED GUIDE PINS USE DIA. 3.56 +/-0.08 (PTH)
   DIA. 3.66 (DRILL) AND DIA 6.5 (PAD).
8. MATES WITH IMPACT DC SERIES NO. 76060.
9. KEEP OUT ZONE FOR BP HOUSING LENGTH INCLUDES AN ADDITIONAL 1.0MM
   TO ACCOMMODATE FOR SPACE REQUIRED BY DC FRONT HOUSING.
10. REFER TO MOLEX PCB ROUTING GUIDE AS-76060-990 FOR ANTIPAD AND ROUTING RECOMMENDATIONS.
11. CONNECTORS SUPPLIED WITH A 2-56 UNC-2A SCREW.
12. "THESE DIMENSIONS REPRESENT THE AREA NEEDED TO ACCOMMODATE CONNECTOR INSERTION
    AND REPAIR ON THE PC BOARD. THIS IS REFERRED TO AS THE "CONNECTOR KEEP OUT ZONE"
    AND DOES NOT REPRESENT THE ACTUAL PERIMETER OF THE CONNECTOR. WHEN LAYING OUT
    A PC BOARD FOR CONNECTORS STACK TOGETHER, USE A 1.9mm PROGRESSION."

THIS DRAWING CONTAINS INFORMATION THAT IS PROPRIETARY TO MOLEX ELECTRONIC TECHNOLOGIES, LLC AND SHOULD NOT BE USED WITHOUT WRITTEN PERMISSION

MIGRATED TO NX	2017/10/31		
EC NO: 167466	2017/10/31		
DRWN: ABABU01	2017/11/02		
CHK'D: CD			
APPR: GGA			
REV	J2		

GENERAL TOLERANCES (UNLESS SPECIFIED)

ANGULAR TOL ±	0.5 °
4 PLACES	±
3 PLACES	±
2 PLACES	± 0.13
1 PLACE	± 0.25
0 PLACES	±

DRAFT WHERE APPLICABLE MUST REMAIN WITHIN DIMENSIONS

DIMENSION UNITS	MM
SCALE	4:1
DRWN BY	MSANDBERG
DATE	2007/05/24
CHK'D BY	JLAURX
DATE	2007/05/24
APPR BY	JLAURX
DATE	2010/10/15
DRAWING SIZE	D
	THIRD ANGLE PROJECTION

molex®

IMPACT 5 PAIR HEADER
LEFT GUIDED ASSEMBLY SALES DRAWING

PRODUCT CUSTOMER DRAWING

SERIES	MATERIAL NUMBER	CUSTOMER
76055	SEE TABLE	GENERAL MARKET

DOCUMENT NUMBER	DOC TYPE	DOC PART	SHEET NUMBER
SD-76055-002	PSD	001	1 OF 3

RELEASE STATUS	P1	RELEASE DATE	02.11.2017 08:14:50

Uncontrolled when displayed.
REVISION: G
DATE: 2017/11/02

PART NUMBER LOGIC

76055-****

MODULE TYPE
3 = GUIDE LEFT, TIN
7 = GUIDE LEFT END WALL, TIN

# OF COLUMNS
1 = 10 COL
2 = 12 COL
6 = 16 COL
7 = 14 COL

KEY ORIENTATION
0 = NO KEY
1 = A
2 = B
3 = C
4 = D
5 = E
6 = F
7 = G
8 = H

PIN LENGTH (P)
3 = 4.50 (SHORT COMPLIANT, 0.46±0.05 PTH)
4 = 4.90 (SHORT COMPLIANT, 0.46±0.05 PTH)
5 = 5.50 (SHORT COMPLIANT, 0.46±0.05 PTH)
6 = 4.50 (MICRO COMPLIANT, 0.39±0.05 PTH)
7 = 4.90 (MICRO COMPLIANT, 0.39±0.05 PTH)
8 = 5.50 (MICRO COMPLIANT, 0.39±0.05 PTH)

PART NUMBER TABLE

MATERIAL NUMBER	# OF COLUMNS	# OF DIFF PAIR	DIM. A	DIM. B	
76055-*1**	10	50	26.9	17.10	GUIDE LEFT END WALL OPTION
76055-*2**	12	60	30.7	20.90	
76055-*7**	14	70	34.5	24.70	
76055-*6**	16	80	38.3	28.50	

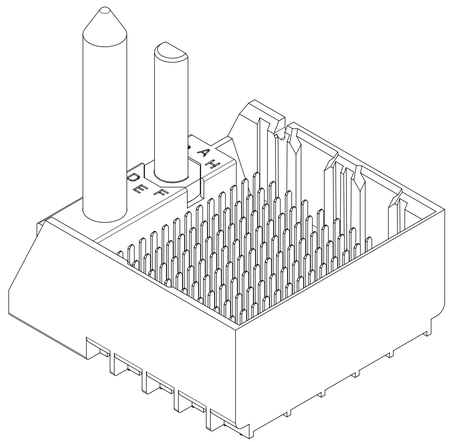

GUIDE LEFT
END WALL OPTION

MATERIAL NUMBER	# OF COLUMNS	# OF DIFF PAIR	DIM. A	DIM. B	
76055-*1**	10	50	25.5	17.10	GUIDE LEFT OPEN WALL OPTION
76055-*2**	12	60	29.3	20.90	
76055-*7**	14	70	33.1	24.70	
76055-*6**	16	80	36.9	28.50	

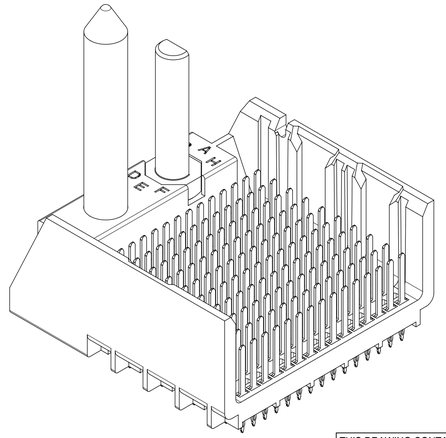

GUIDE LEFT
OPEN WALL OPTION

THIS DRAWING CONTAINS INFORMATION THAT IS PROPRIETARY TO MOLEX ELECTRONIC TECHNOLOGIES, LLC AND SHOULD NOT BE USED WITHOUT WRITTEN PERMISSION

MIGRATED TO NX
EC NO: 167466 2017/10/31
DRWN: ABABU01 2017/10/31
CHK'D: CD 2017/11/02
APPR: GGA

REV: J2

GENERAL TOLERANCES (UNLESS SPECIFIED)
ANGULAR TOL ± 0.5 °
4 PLACES ±
3 PLACES ±
2 PLACES ± 0.13
1 PLACE ± 0.25
0 PLACES ±
DRAFT WHERE APPLICABLE MUST REMAIN WITHIN DIMENSIONS

DIMENSION UNITS: MM
SCALE: 4:1
DRWN BY: MSANDBERG DATE: 2007/05/24
CHK'D BY: JLAURX DATE: 2007/05/24
APPR BY: JLAURX DATE: 2010/10/15
DRAWING SIZE: D
THIRD ANGLE PROJECTION

molex®

IMPACT 5 PAIR HEADER
LEFT GUIDED ASSEMBLY SALES DRAWING

PRODUCT CUSTOMER DRAWING

SERIES	MATERIAL NUMBER	CUSTOMER
76055	SEE TABLE	GENERAL MARKET

DOCUMENT NUMBER	DOC TYPE	DOC PART	SHEET NUMBER
SD-76055-002	PSD	001	2 OF 3

RELEASE STATUS | P1 | RELEASE DATE | 02.11.2017 08:14:50

TEMPLATE GENERATED BY DOCUMENTUM
DATE: 2017/10/26

IMPACT 5 PAIR
BOARD RELATIONSHIPS

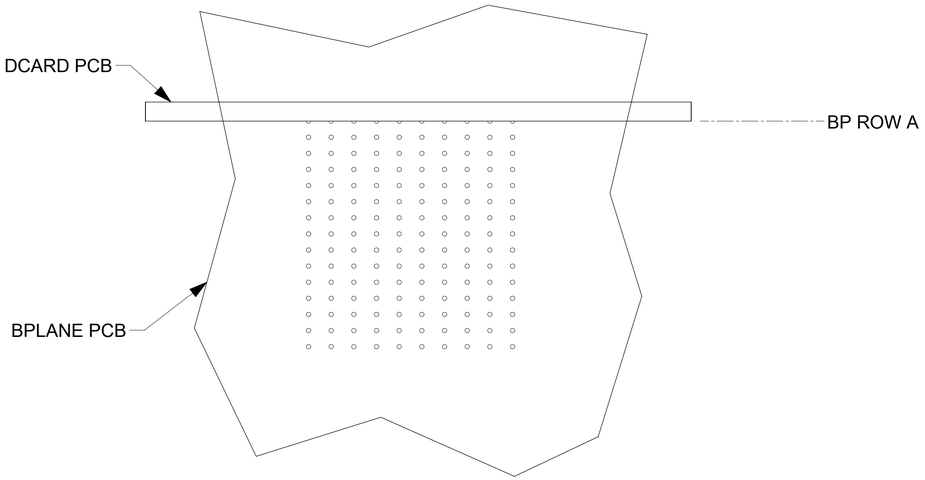

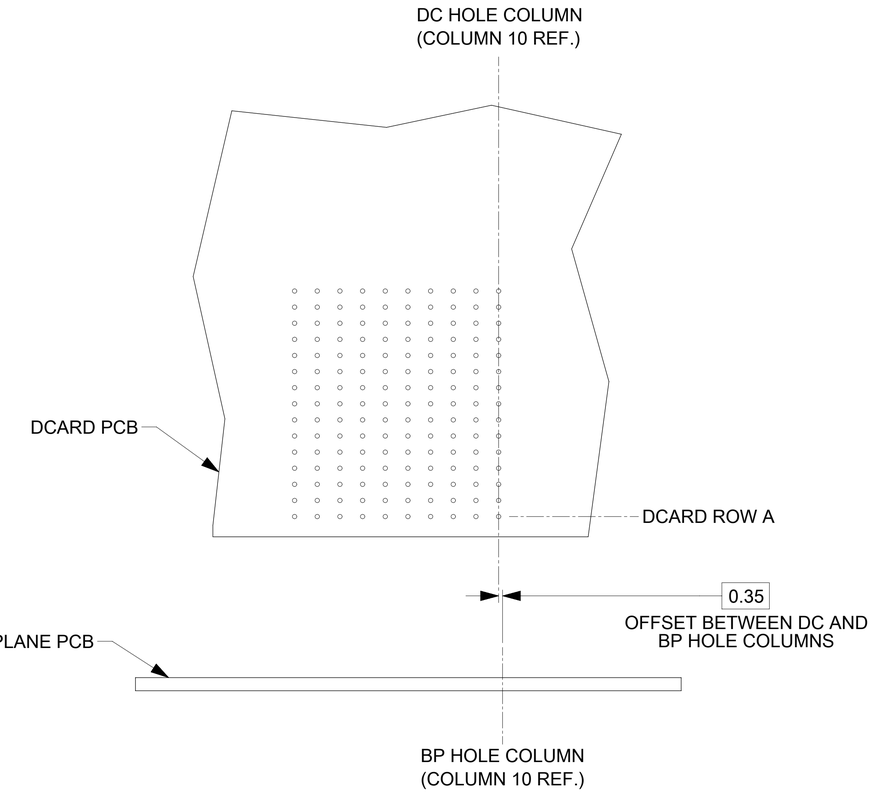

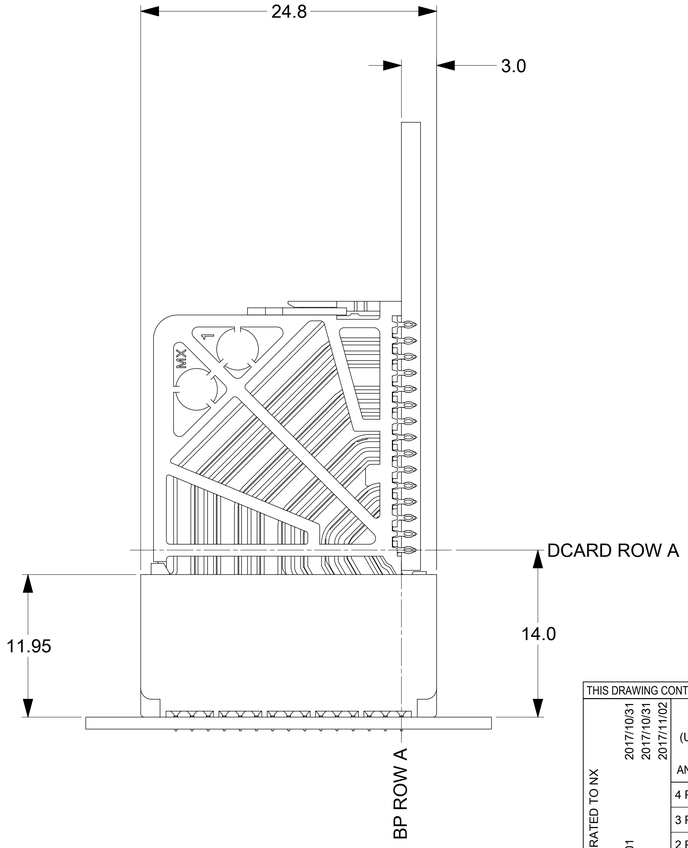

THIS DRAWING CONTAINS INFORMATION THAT IS PROPRIETARY TO MOLEX ELECTRONIC TECHNOLOGIES, LLC AND SHOULD NOT BE USED WITHOUT WRITTEN PERMISSION

MIGRATED TO NX
2017/10/31
2017/10/31
2017/11/02
EC NO: 167466
DRWN: ABABU01
CHK'D: CD
APPR: GGA
REV: J2

GENERAL TOLERANCES (UNLESS SPECIFIED)

ANGULAR TOL ±	0.5 °
4 PLACES	±
3 PLACES	±
2 PLACES	± 0.13
1 PLACE	± 0.25
0 PLACES	±

DRAFT WHERE APPLICABLE MUST REMAIN WITHIN DIMENSIONS

DIMENSION UNITS: MM
SCALE: 4:1
DRWN BY: MSANDBERG DATE: 2007/05/24
CHK'D BY: JLAURX DATE: 2007/05/24
APPR BY: JLAURX DATE: 2010/10/15
DRAWING SIZE: D
THIRD ANGLE PROJECTION

molex®

IMPACT 5 PAIR HEADER
LEFT GUIDED ASSEMBLY SALES DRAWING

PRODUCT CUSTOMER DRAWING

SERIES	MATERIAL NUMBER	CUSTOMER
76055	SEE TABLE	GENERAL MARKET

DOCUMENT NUMBER	DOC TYPE	DOC PART	SHEET NUMBER
SD-76055-002	PSD	001	3 OF 3

RELEASE STATUS	P1	RELEASE DATE	02.11.2017 08:14:50

PRODUCT model-fit-print.tc
DATE 02.11.2017
DATE_RELEASED