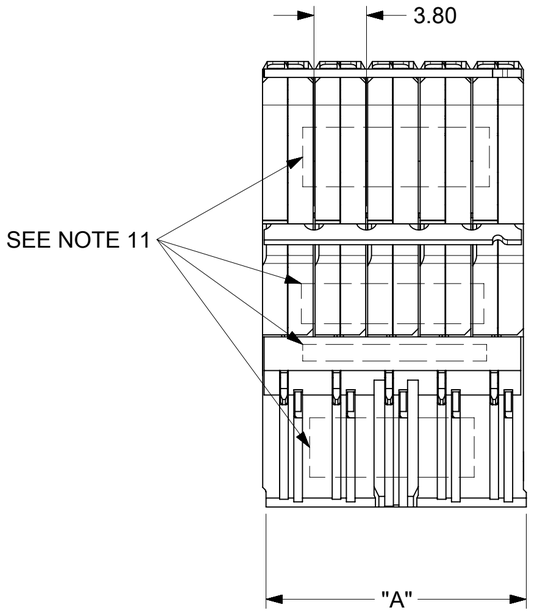

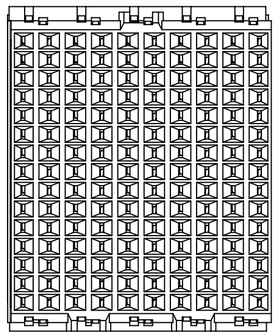

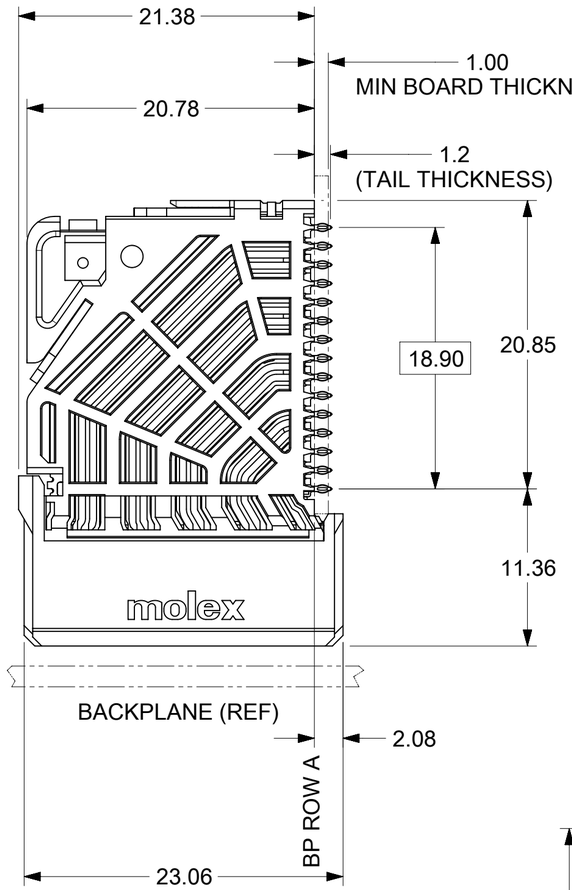

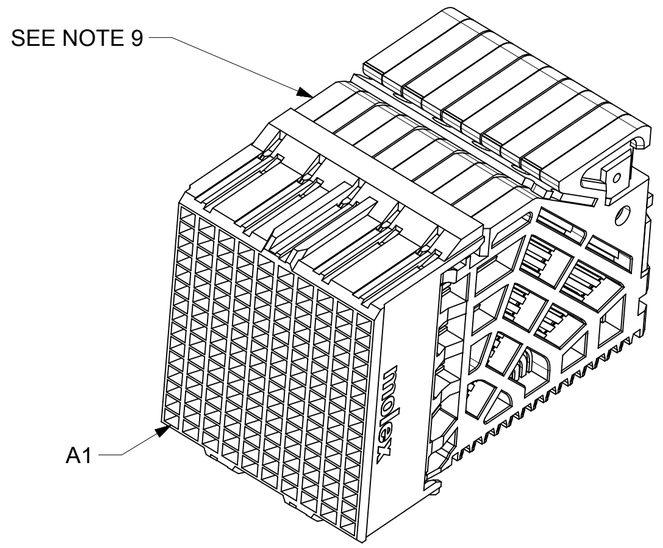

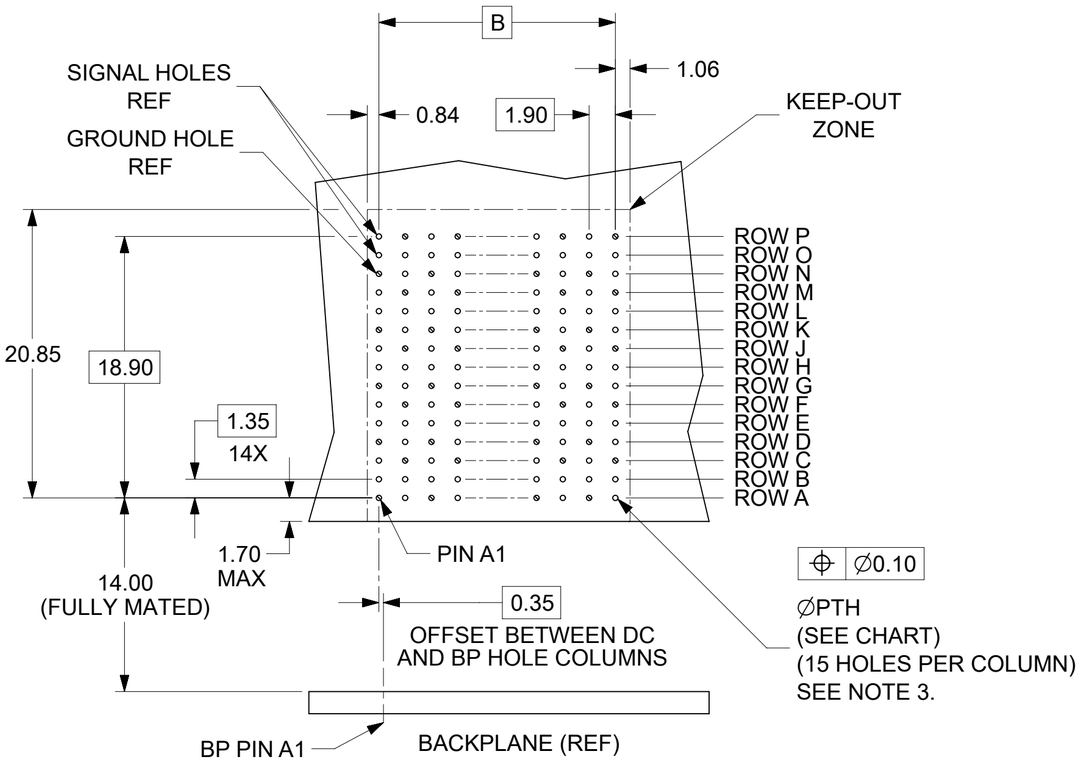

NOTES:

1. MATERIALS: HOUSING - LIQUID CRYSTAL POLYMER (LCP), GLASS-FILLED, UL94V-0
   TERMINALS - HIGH PERFORMANCE COPPER ALLOY
2. FINISH: 30µIN MIN GOLD IN CONTACT AREA. SELECTIVE TIN
   ON PCB TAILS. NICKEL OVERALL.
3. REFER TO MOLEX PRODUCT SPEC PS-76060-999 FOR PERFORMANCE SPECIFICATIONS
   AND ADDITIONAL PCB INFORMATION.
4. EACH SIGNAL WAFER CONTAINS 2 COLUMNS OF TERMINALS.
5. PRODUCT IS PACKAGED PER PK-70873-611.
6. THIS PART CONFORMS TO CLASS B REQUIREMENTS OF COSMETIC SPEC PS-45499-002.
7. REFER TO MOLEX SALES DRAWING SD-76055-001 FOR THE MATING HEADERS.
8. REFER TO MOLEX PCB MOUNTING GUIDE AS-76060-990 FOR ANTIPAD AND ROUTING
   RECOMMENDATIONS.
9. PART NUMBER 76060-1020 SHOWN ON DRAWING. KEYING FEATURES WILL CHANGE
   WITH COLUMN SIZE.
10. MINIMUM BOARD THICKNESS IS 1.00 mm FOR COMPLIANT PIN FUNCTIONALITY.
11. MARKING: LOCATED APPROXIMATELY AS SHOWN. PART NUMBER AND DATE CODE.

DAUGHTERCARD HOLE PATTERN
(CONNECTOR SIDE)

THIS DRAWING CONTAINS INFORMATION THAT IS PROPRIETARY TO MOLEX ELECTRONIC TECHNOLOGIES, LLC AND SHOULD NOT BE USED WITHOUT WRITTEN PERMISSION

DIMENSION UNITS: mm	SCALE: NTS	CURRENT REV DESC: REMASTERED TO NX	molex
GENERAL TOLERANCES (UNLESS SPECIFIED)			IMPACT 100 OHM DC 5 PAIR SIGNAL MODULE UNGUIDED SALES DRAWING
ANGULAR TOL ± 0.5 °		EC NO: 705090	PRODUCT CUSTOMER DRAWING
4 PLACES ±		DRWN: SKANDB 2021/09/27	DOCUMENT NUMBER: SD-76060-001 | DOC TYPE: PSD | DOC PART: 001 | REVISION: K
3 PLACES ±		CHK'D: VINODM3 2022/02/17	
2 PLACES ± 0.13		APPR: LZENG 2022/05/13	
1 PLACE ± 0.25		INITIAL REVISION:	
0 PLACES ±		DRWN: MCARRANZA 2007/07/11	
DRAFT WHERE APPLICABLE MUST REMAIN WITHIN DIMENSIONS		APPR: JLAURX 2007/07/11	
THIRD ANGLE PROJECTION	DRAWING: C-SIZE	SERIES: 76060	MATERIAL NUMBER: SEE TABLE | CUSTOMER: GENERAL MARKET | SHEET NUMBER: 1 OF 2

DOCUMENT STATUS	P1	RELEASE DATE	2022/05/13 03:06:30

MATERIAL NUMBER	# OF COLUMNS	# OF DIFF PAIR	DIM "A" MAX	DIM "B"	PTH∅
76060-*010	10	50	19.00	17.10	0.46 ±0.05
76060-*012	12	60	22.80	20.90	
76060-*014	14	70	26.60	24.70	
76060-*016	16	80	30.40	28.50	
76060-*020	10	50	19.00	17.10	0.39 ±0.05
76060-*022	12	60	22.80	20.90	
76060-*024	14	70	26.60	24.70	
76060-*026	16	80	30.40	28.50	

76060-*0**

1 = OPEN LEAD-FREE

# OF COLUMNS
10 = 10 COL 0.46 PTH
12 = 12 COL 0.46 PTH
14 = 14 COL 0.46 PTH
16 = 16 COL 0.46 PTH
20 = 10 COL 0.39 PTH
22 = 12 COL 0.39 PTH
24 = 14 COL 0.39 PTH
26 = 16 COL 0.39 PTH

DOCUMENT STATUS	P1	RELEASE DATE	2022/05/13 03:06:30

FORMAT: master-tb-prod-C
REVISION: J1
DATE: 2021/05/01

FUNCTIONAL SYMBOLS
FA = 0
FC = 0
FP = 0

DIVISIONAL SYMBOLS

THIS DRAWING CONTAINS INFORMATION THAT IS PROPRIETARY TO MOLEX ELECTRONIC TECHNOLOGIES, LLC AND SHOULD NOT BE USED WITHOUT WRITTEN PERMISSION

DIMENSION UNITS: mm
SCALE: NTS

GENERAL TOLERANCES (UNLESS SPECIFIED)

ANGULAR TOL	± 0.5 °
4 PLACES	±
3 PLACES	±
2 PLACES	± 0.13
1 PLACE	± 0.25
0 PLACES	±

DRAFT WHERE APPLICABLE MUST REMAIN WITHIN DIMENSIONS

CURRENT REV DESC: REMASTERED TO NX

EC NO: 705090
DRWN: SKANDB 2021/09/27
CHK'D: VINODM3 2022/02/17
APPR: LZENG 2022/05/13

INITIAL REVISION:
DRWN: MCARRANZA 2007/07/11
APPR: JLAURX 2007/07/11

THIRD ANGLE PROJECTION

DRAWING: C-SIZE
SERIES: 76060

molex

IMPACT 100 OHM DC
5 PAIR SIGNAL MODULE UNGUIDED SALES DRAWING

PRODUCT CUSTOMER DRAWING

DOCUMENT NUMBER	DOC TYPE	DOC PART	REVISION
SD-76060-001	PSD	001	K

MATERIAL NUMBER	CUSTOMER	SHEET NUMBER
SEE TABLE	GENERAL MARKET	2 OF 2