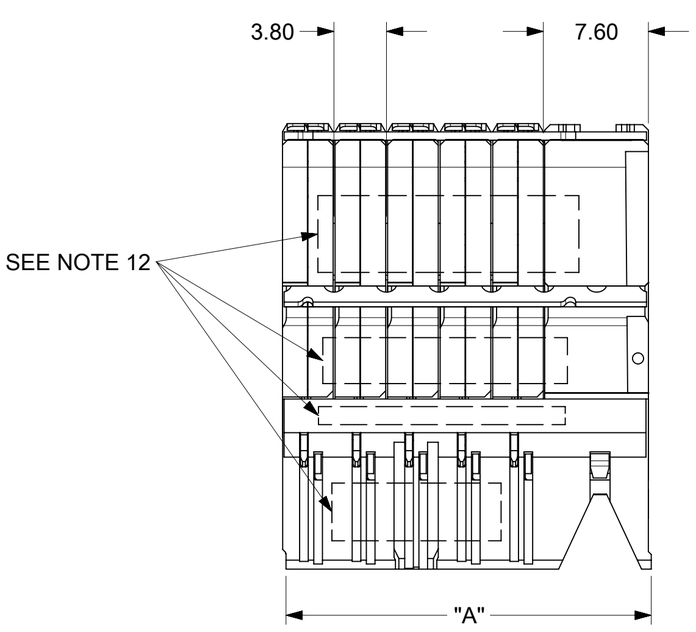

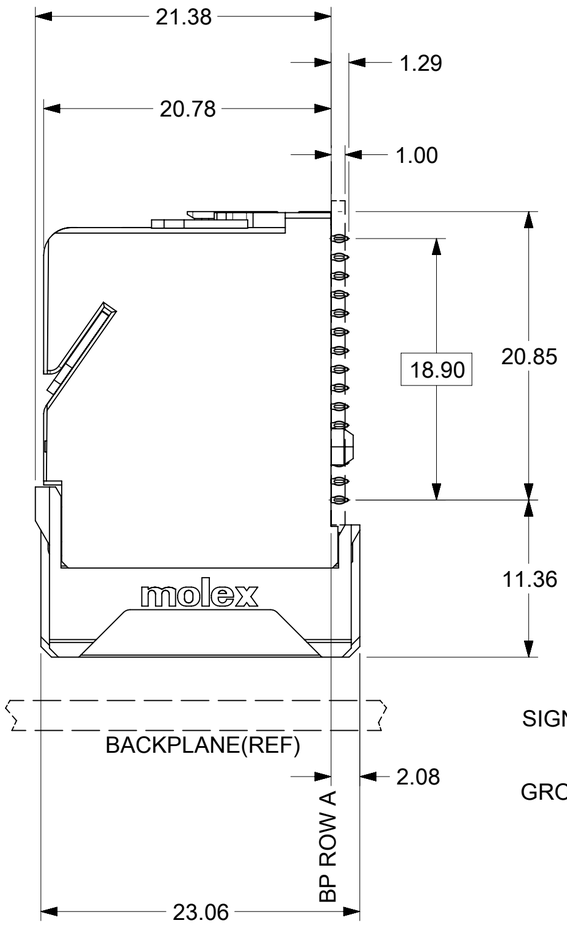

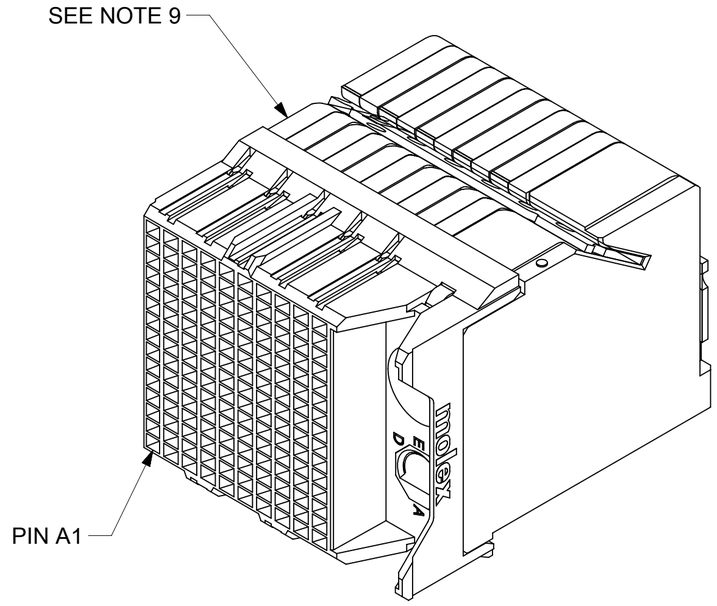

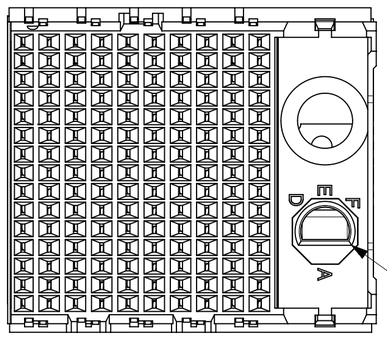

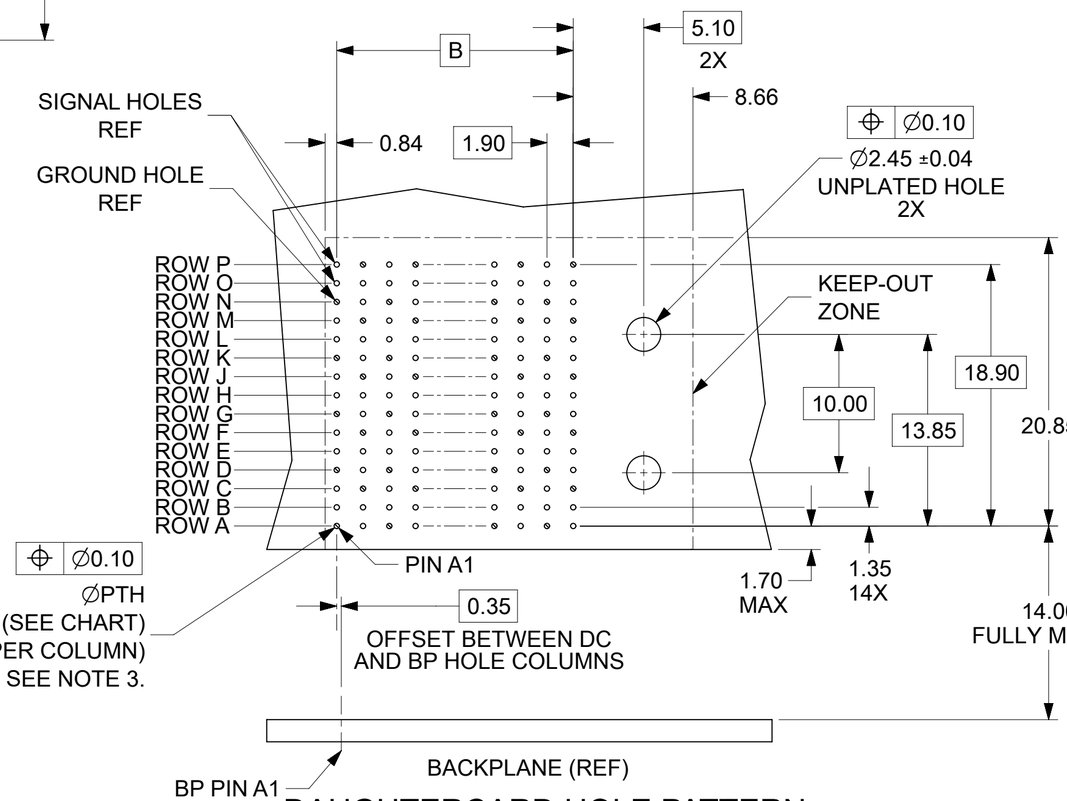

DAUGHTERCARD HOLE PATTERN
(CONNECTOR SIDE)

NOTES:
1. MATERIALS: HOUSING - LIQUID CRYSTAL POLYMER (LCP), GLASS-FILLED, UL94V-0
   TERMINALS - HIGH PERFORMANCE COPPER ALLOY
2. FINISH: 30µIN MIN SELECTIVE GOLD IN CONTACT AREA, SELECTIVE TIN ON PCB TAILS. NICKEL OVERALL.
3. REFER TO MOLEX PRODUCT SPEC PS-76060-999 FOR PERFORMANCE SPECIFICATIONS AND ADDITIONAL PCB INFORMATION.
4. EACH SIGNAL WAFER CONTAINS 2 COLUMNS OF TERMINALS.
5. PRODUCT IS PACKAGED PER PK-70873-611.
6. THIS PART CONFORMS TO CLASS B REQUIREMENTS OF COSMETIC SPEC PS-45499-002.
7. REFER TO MOLEX SALES DRAWING SD-76055-003 FOR THE MATING HEADERS.
8. REFER TO MOLEX PCB MOUNTING GUIDE AS 76060-990 FOR ANTIPAD AND ROUTING RECOMMENDATIONS.
9. PART NUMBER 76060-5120 SHOWN ON DRAWING. KEYING FEATURES WILL CHANGE WITH COLUMN SIZE.
10. MINIMUM BOARD THICKNESS IS 1.00 mm FOR COMPLIANT PIN FUNCTIONALITY.
11. WHEN USING MOLEX SUPPLIED #2-32 SCREW 73726-0000 (9.50mm ±0.38 THREADABLE SCREW LENGTH), THE MAXIMUM BOARD THICKNESS IS 4.4mm.
12. MARKING: LOCATED APPROXIMATELY AS SHOWN. PART NUMBER AND DATE CODE.

THIS DRAWING CONTAINS INFORMATION THAT IS PROPRIETARY TO MOLEX ELECTRONIC TECHNOLOGIES, LLC AND SHOULD NOT BE USED WITHOUT WRITTEN PERMISSION

DIMENSION UNITS: mm	SCALE: NTS	CURRENT REV DESC: REMASTERED TO NX	molex
GENERAL TOLERANCES (UNLESS SPECIFIED)			IMPACT 100 OHM DC 5 PAIR SIGNAL MODULE GUIDE RIGHT SALES DWG
ANGULAR TOL ± 0.5 °		EC NO: 705090	PRODUCT CUSTOMER DRAWING
4 PLACES ±		DRWN: SKANDB 2021/09/27	
3 PLACES ±		CHK'D: VINODM3 2022/02/17	
2 PLACES ± 0.13		APPR: LZENG 2022/05/13	
1 PLACE ± 0.25		INITIAL REVISION:	DOCUMENT NUMBER: SD-76060-004 / DOC TYPE: PSD / DOC PART: 001 / REVISION: K
0 PLACES ±		DRWN: MCARRANZA 2007/07/11	
DRAFT WHERE APPLICABLE MUST REMAIN WITHIN DIMENSIONS		APPR: JLAURX 2007/07/11	
THIRD ANGLE PROJECTION	DRAWING: C-SIZE	SERIES: 76060	MATERIAL NUMBER: SEE TABLE / CUSTOMER: GENERAL MARKET / SHEET NUMBER: 1 OF 2

DOCUMENT STATUS	P1	RELEASE DATE	2022/05/13 03:06:32

FORMAT: master-tb-prod-C
REVISION: J1
DATE: 2021/05/01

MATERIAL NUMBER	# OF COLUMNS	# OF DIFF PAIR	DIM "A" MAX	DIM "B"	PTH∅
76060-***0	10	50	26.60	17.10	0.46 ±0.05
76060-***2	12	60	30.40	20.90	
76060-***4	14	70	34.20	24.70	
76060-***6	16	80	38.00	28.50	
76060-***0	10	50	26.60	17.10	0.39 ±0.05
76060-***2	12	60	30.40	20.90	
76060-***4	14	70	34.20	24.70	
76060-***6	16	80	38.00	28.50	

76060-****

MODULE & TAIL PLATING TYPE
5 = RIGHT GUIDED LEAD-FREE

POLARIZATION KEY ORIENTATION
0 = NO KEY
1 = A 5 = E
2 = B 6 = F
3 = C 7 = G
4 = D 8 = H

# OF COLUMNS
10 = 10 COL 0.46 PTH
12 = 12 COL 0.46 PTH
14 = 14 COL 0.46 PTH
16 = 16 COL 0.46 PTH
20 = 10 COL 0.39 PTH
22 = 12 COL 0.39 PTH
24 = 14 COL 0.39 PTH
26 = 16 COL 0.39 PTH

THIS DRAWING CONTAINS INFORMATION THAT IS PROPRIETARY TO MOLEX ELECTRONIC TECHNOLOGIES, LLC AND SHOULD NOT BE USED WITHOUT WRITTEN PERMISSION

DIMENSION UNITS	SCALE
mm	NTS

GENERAL TOLERANCES (UNLESS SPECIFIED)

	MM	INCH
4 PLACES	±	±
3 PLACES	±	±
2 PLACES	± 0.13	±
1 PLACE	± 0.25	±
0 PLACES	±	±
ANGULAR TOL	± 0.5 °	

DRAFT WHERE APPLICABLE MUST REMAIN WITHIN DIMENSIONS

CURRENT REV DESC: REMASTERED TO NX

EC NO: 705090
DRWN: SKANDB 2021/09/27
CHK'D: VINODM3 2022/02/17
APPR: LZENG 2022/05/13

INITIAL REVISION:
DRWN: JLAURX 2008/06/12
APPR: JLAURX 2010/11/04

molex

IMPACT 100 OHM DC
5 PAIR SIGNAL MODULE GUIDE RIGHT SALES DWG

PRODUCT CUSTOMER DRAWING

DOCUMENT NUMBER	DOC TYPE	DOC PART	REVISION
SD-76060-004	PSD	001	K

THIRD ANGLE PROJECTION	DRAWING	SERIES	MATERIAL NUMBER	CUSTOMER	SHEET NUMBER
	C-SIZE	76060	SEE TABLE	GENERAL MARKET	2 OF 2

DOCUMENT STATUS	P1	RELEASE DATE	2022/05/13 03:06:32

FORMAT: Eng-lega-master-tb-prod-C
REVISION: E1
DATE: 2021/05/01