RoHS Compliant

8GB DDR3 SDRAM UDIMM

Product Specifications

August 26, 2014

Version 1.1

Apacer Technology Inc.
1F., No.32, Zhongcheng Rd., Tucheng Dist., New Taipei City 236, Taiwan
Tel: +886-2-2267-8000 Fax: +886-2-2267-2261
www.apacer.com

Table of Contents

General Description 2
Ordering Information 2
Key Parameters 2
Specifications: 3
Features: 4
Pin Assignments 5
Pin Descriptions 7
Functional Block Diagram 8
Absolute Maximum Ratings 9
DRAM Component Operating Temperature Range 10
Operating Conditions 11
Mechanical Drawing 12

General Description

Apacer **78.C1GET.AF10C** is a 1024M x 64 DDR3 SDRAM (Synchronous DRAM) DIMM. This high-density memory module consists of 16 pieces 512M x 8 bits with 8 banks DDR3 synchronous DRAMs in BGA packages and a 2K EEPROM. The module is a 240-pins memory module and is intended for mounting into a connector socket. Decoupling capacitors are mounted on the printed circuit board for each DDR3 SDRAM. The following provides general specifications of this module.

Ordering Information

Part Number	Bandwidth	Speed Grade	Max Frequency	CAS Latency
78.C1GET.AF10C	12.8 GB/sec	1600 Mbps	800 MHz	CL11

Density	Organization	Component	Rank
8GB	1024M x 64	512M x8*16	2

Key Parameters

MT/s	DDR3-1066	DDR3-1333	DDR3-1600	Unit
Grade	-CL7	-CL9	-CL11	
tCK (min)	1.875	1.5	1.25	ns
CAS latency	7	9	11	tCK
tRCD (min)	13.125	13.5	13.75	ns
tRP (min)	13.125	13.5	13.75	ns
tRAS (min)	37.5	36	35	ns
tRC (min)	50.625	49.5	48.75	ns
CL-tRCD-tRP	7-7-7	9-9-9	11-11-11	tCK

Specifications:

- On-DIMM thermal sensor : No
- Organization: 1024 words x 64 bits, 2 ranks
- Integrating 16 pieces of 4G bits DDR3 SDRAM sealed FBGA
- Package: 240-pin socket type dual in-line memory module (DIMM)
- PCB: height 30.0 mm, lead pitch 1.0 mm (pin), lead-free (RoHS compliant)
- Power supply VDD: 1.5V ± 0.075V
- Serial Presence Detect (SPD)
- Eight Internal banks for concurrent operation (Components)
- Interface: SSTL_15
- Burst lengths (BL): 8 and 4 with Burst Chop (BC)
- /CAS Latency (CL): 6, 7, 8, 9, 10, 11
- /CAS Write Latency (CWL): 5, 6, 7, 8
- Supports auto pre-charge option for each burst access
- Supports auto-refresh/self-refresh
- Refresh cycles: 7.8 μs at 0℃≤ TC ≤ +85℃

Features:

- Double-date-rate architecture: 2 data transfers per clock cycle
- The high-speed data transfer is realized by the 8-bits prefetch pipelined architecture.
- Bi-directional differential data strobe (DQS and /DQS) is transmitted / received with data for capturing data at the receiver
- DQS: edge-aligned with data for read; center aligned with data for write
- Differential clock inputs (CK and /CK)
- DLL aligns DQ and DQS transitions with CK transitions
- Data mask (DM) for writing data
- Posted /CAS by programmable additive latency for enhanced command and data bus efficiency
- On-Die-Termination (ODT) for improved signal quality: Synchronous ODT/Dynamic ODT/Asynchronous ODT
- Multi-Purpose Register (MPR) for temperature read out
- ZQ calibration for DQ drive and ODT
- Programmable Partial Array Self-Refresh (PASR)
- /Reset pin for power-up sequence and reset function
- SRT range: normal/extended, auto/manual self-refresh
- Programmable output driver impedance control
- Commands entered at each positive clock input, while data and data mask are referenced to both edges of DQS

Pin Assignments

Pin No.	Pin name	Pin No.	Pin name	Pin No.	Pin name	Pin No.	Pin name
1	VREFDQ	31	DQ25	61	A2	91	DQ41
2	VSS	32	VSS	62	VDD	92	VSS
3	DQ0	33	/DQS3	63	CK1(NC)	93	/DQS5
4	DQ1	34	DQS3	64	/CK1(NC)	94	DQS5
5	VSS	35	VSS	65	VDD	95	VSS
6	/DQS0	36	DQ26	66	VDD	96	DQ42
7	DQS0	37	DQ27	67	VREFCA	97	DQ43
8	VSS	38	VSS	68	NC	98	VSS
9	DQ2	39	NC	69	VDD	99	DQ48
10	DQ3	40	NC	70	A10(AP)	100	DQ49
11	VSS	41	VSS	71	BA0	101	VSS
12	DQ8	42	NC	72	VDD	102	/DQS6
13	DQ9	43	NC	73	/WE	103	DQS6
14	VSS	44	VSS	74	/CAS	104	VSS
15	/DQS1	45	NC	75	VDD	105	DQ50
16	DQS1	46	NC	76	/CS1(NC)	106	DQ51
17	VSS	47	VSS	77	ODT1(NC)	107	VSS
18	DQ10	48	NC	78	VDD	108	DQ56
19	DQ11	49	NC	79	NC	109	DQ57
20	VSS	50	CKE0	80	VSS	110	VSS
21	DQ16	51	VDD	81	DQ32	111	/DQS7
22	DQ17	52	BA2	82	DQ33	112	DQS7
23	VSS	53	NC	83	VSS	113	VSS
24	/DQS2	54	VDD	84	/DQS4	114	DQ58
25	DQS2	55	A11	85	DQS4	115	DQ59
26	VSS	56	A7	86	VSS	116	VSS
27	DQ18	57	VDD	87	DQ34	117	SA0
28	DQ19	58	A5	88	DQ35	118	SCL
29	VSS	59	A4	89	VSS	119	SA2
30	DQ24	60	VDD	90	DQ40	120	VTT

Pin No.	Pin name	Pin No.	Pin name	Pin No.	Pin name	Pin No.	Pin name
121	VSS	151	VSS	181	A1	211	VSS
122	DQ4	152	DM3	182	VDD	212	DM5
123	DQ5	153	NC	183	VDD	213	NC
124	VSS	154	VSS	184	CK0	214	VSS
125	DM0	155	DQ30	185	/CK0	215	DQ46
126	NC	156	DQ31	186	VDD	216	DQ47
127	VSS	157	VSS	187	NC	217	VSS
128	DQ6	158	NC	188	A0	218	DQ52
129	DQ7	159	NC	189	VDD	219	DQ53
130	VSS	160	VSS	190	BA1	220	VSS
131	DQ12	161	NC	191	VDD	221	DM6
132	DQ13	162	NC	192	/RAS	222	NC
133	VSS	163	VSS	193	/CS0	223	VSS
134	DM1	164	NC	194	VDD	224	DQ54
135	NC	165	NC	195	ODT0	225	DQ55
136	VSS	166	VSS	196	A13	226	VSS
137	DQ14	167	NC	197	VDD	227	DQ60
138	DQ15	168	/RESET	198	NC	228	DQ61
139	VSS	169	CKE1(NC)	199	VSS	229	VSS
140	DQ20	170	VDD	200	DQ36	230	DM7
141	DQ21	171	A15(NC)	201	DQ37	231	NC
142	VSS	172	A14(NC)	202	VSS	232	VSS
143	DM2	173	VDD	203	DM4	233	DQ62
144	NC	174	A12	204	NC	234	DQ63
145	VSS	175	A9	205	VSS	235	VSS
146	DQ22	176	VDD	206	DQ38	236	VDDSPD
147	DQ23	177	A8	207	DQ39	237	SA1
148	VSS	178	A6	208	VSS	238	SDA
149	DQ28	179	VDD	209	DQ44	239	VSS
150	DQ29	180	A3	210	DQ45	240	VTT

*Note:
1. CS1, ODT1, CKE1: Used for dual-rank UDIMMs; NC on single-rank UDIMMs
2. CK1,NC and CK1,NC : Used for dual-rank UDIMMs; not used on single-rank UDIMMs, but terminated

Pin Descriptions

Pin Name	Description
Ax*	SDRAM address bus
BAx	SDRAM bank select
DQx	DIMM memory data bus
/RAS	SDRAM row address strobe
/CAS	SDRAM column address strobe
/WE	SDRAM write enable
/CSx	SDRAM Chip select lines
CKEx	SDRAM clock enable lines
CKx	SDRAM clock input
/CKx	SDRAM Differential clock input
DQSx	SDRAM data strobes(positive line of differential pair)
/DQSx	SDRAM data strobes(negative line of differential pair)
DMx	SDRAM input mask
SCL	Clock input for serial PD
SDA	Data input/output for serial PD
SAx	Serial address input
VDD	Power for internal circuit
VDDSPD	Serial EEPROM positive power supply
VREFDQ	SDRAM I/O reference supply
VREFCA	SDRAM command/address reference supply
VSS	Power supply return(ground)
VTT	SDRAM I/O termination supply
/RESET	Set DRAM to known state
ODTx	On-die termination control lines
NC	Spare pins(no connect)

*IC Component Composition:

128Mx8	A0~A13
256Mx8	A0~A14
512Mx8	A0~A15
1024Mx8	A0~A15

Functional Block Diagram

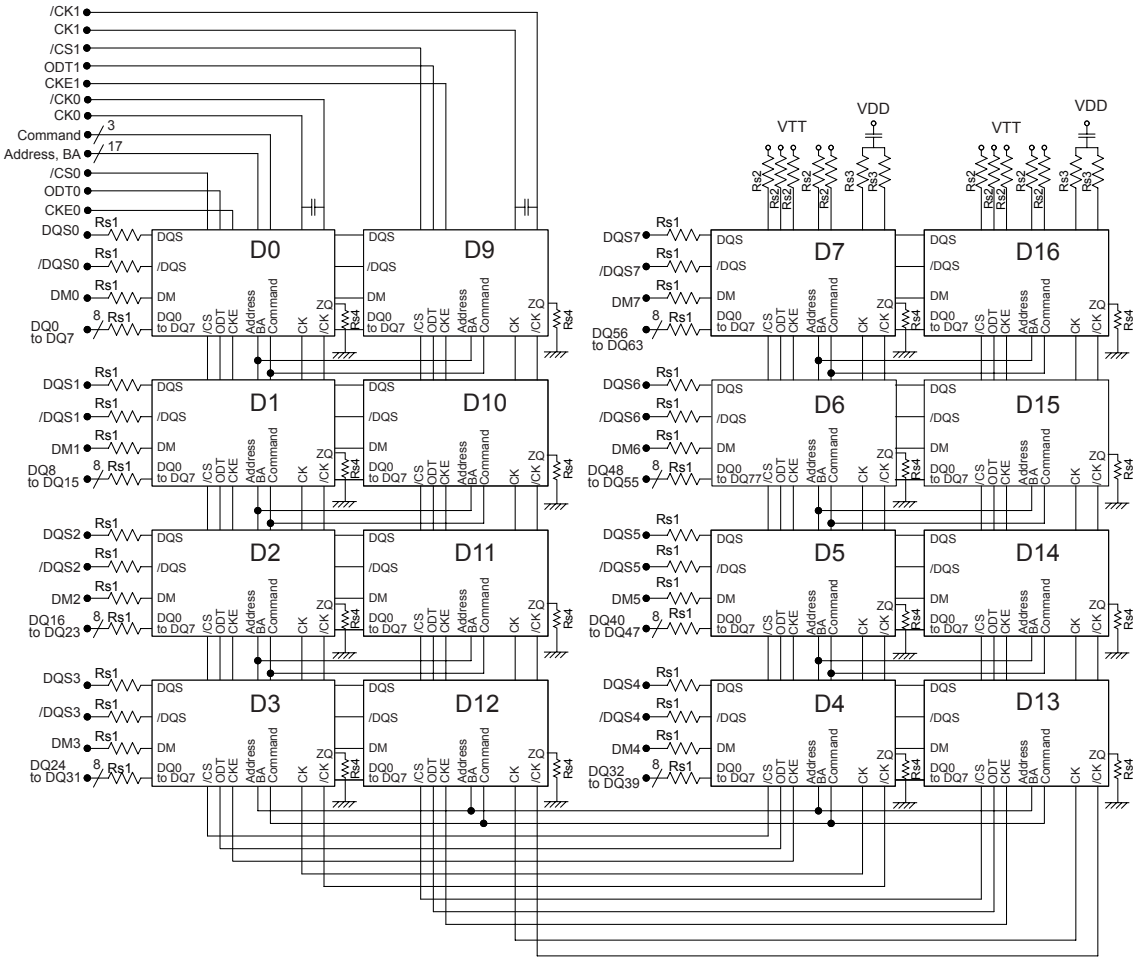

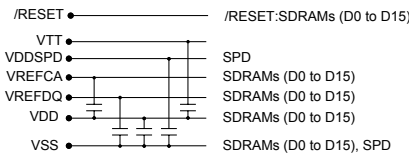

Notes :
1. DQ wiring may be changed within a byte.
2. DQ, DQS, /DQS, ODT, DM, CKE, /CS relationships must be maintained as shown.

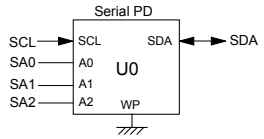

* D0 to D16: 4G bits DDR3 SDRAM
Address, BA: A0 to A15, BA0 to BA2
Command: /RAS, /CAS, /WE
U0: 256 bytes EEPROM
Rs1: 15Ω
Rs2: 39Ω
Rs3: 36Ω
Rs4: 240Ω

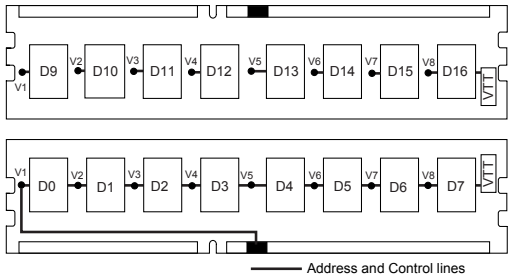

Absolute Maximum Ratings

Parameter	Symbol	Description	Units
Voltage on VDD pin relative to Vss	V_{DD}	- 0.4 V ~ 1.975 V	V
Voltage on VDDQ pin relative to Vss	V_{DDQ}	- 0.4 V ~ 1.975 V	V
Voltage on any pin relative to Vss	V_{IN}, V_{OUT}	- 0.4 V ~ 1.975 V	V
Storage Temperature	TSTG	-55 to +100	℃

Notes:

1. Stresses greater than those listed under “Absolute Maximum Ratings” may cause permanent damage to the device. This is a stress rating only and functional operation of the device at these or any other conditions above those indicated in the operational sections of this specification is not implied. Exposure to absolute maximum rating conditions for extended periods may affect reliability.
2. Storage Temperature is the case surface temperature on the center/top side of the DRAM. For the measurement conditions, please refer to JESD51-2 standard.
3. VDD and VDDQ must be within 300mV of each other at all times; and VREF must not be greater than 0.6 x VDDQ, when VDD and VDDQ are less than 500mV; VREF may be equal to or less than 300mV.

.

DRAM Component Operating Temperature Range

Symbol	Parameter	Rating	Units	Notes
TOPER	Normal Operating Temperature Range	0 to 85	℃	1,2
	Extended Temperature Range	85 to 95	℃	1,3

Notes:

1. Operating Temperature TOPER is the case surface temperature on the center / top side of the DRAM. For measurement conditions please refer to the JEDEC document JESD51-2.
2. The Normal Temperature Range specifies the temperatures where all DRAM specifications will be supported during operation, the DRAM case temperature must be maintained between 0℃ - 85℃ under all operating conditions.
3. Some applications require operation of the DRAM in the Extended Temperature Range between 85℃ and 95℃ case temperature. Full specifications are guaranteed in this range, but the following additional conditions apply:
   a. Refresh commands must be doubled in frequency, therefore reducing the Refresh interval tREFI to 3.9 µs.
   b. If Self-Refresh operation is required in the Extended Temperature Range, then it is mandatory to either use the Manual Self-Refresh mode with Extended Temperature Range capability (MR2 A6 = 0b and MR2 A7 = 1b), in this case IDD6 current can be increased around 10~20% than normal Temperature range.

Operating Conditions

Recommended DC Operating Conditions - DDR3 (1.5V) operation

Symbol	Parameter	Rating			Units
		Min.	Typ.	Max.	
VDD	Supply Voltage	1.425	1.5	1.575	V
VDDQ	Supply Voltage for Output	1.425	1.5	1.575	V

Notes:

1. Under all conditions VDDQ must be less than or equal to VDD..
2. VDDQ tracks with VDD. AC parameters are measured with VDD and VDDQ tied together.

Mechanical Drawing

Unit: mm

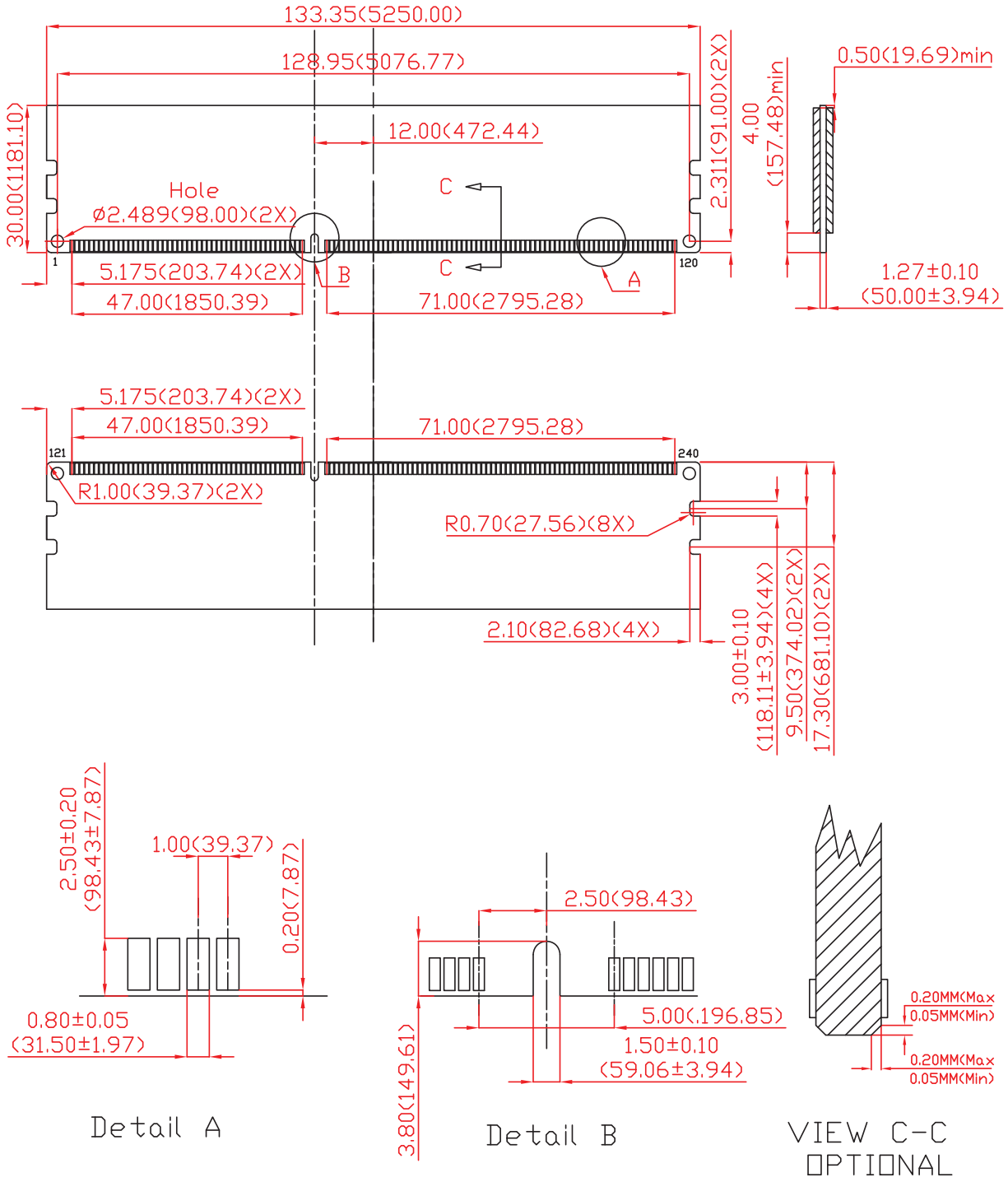

(All dimensions are in millimeters with ±0.15mm tolerance unless specified otherwise.)

Revision History

Revision	Date	Description	Remark
0.9	08/28/2012	Official release	
1.0	08/29/2012	release	
1.1	07/23/2013	Changed headquarters address	

Global Presence

Taiwan (Headquarters)

Apacer Technology Inc.
1F., No.32, Zhongcheng Rd., Tucheng Dist.,
New Taipei City 236, Taiwan R.O.C.
Tel: +886-2-2267-8000
Fax: +886-2-2267-2261
amtsales@apacer.com

U.S.A.

Apacer Memory America, Inc.
386 Fairview Way, Suite102,
Milpitas, CA 95035
Tel: 1-408-518-8699
Fax: 1-408-935-9611
sa@apacerus.com

Japan

Apacer Technology Corp.
5F, Matsura Bldg., Shiba, Minato-Ku
Tokyo, 105-0014, Japan
Tel: 81-3-5419-2668
Fax: 81-3-5419-0018
jpservices@apacer.com

Europe

Apacer Technology B.V.
Science Park Eindhoven 5051 5692 EB Son,
The Netherlands
Tel: 31-40-267-0000
Fax: 31-40-267-0000#6199
sales@apacer.nl

China

Apacer Electronic (Shanghai) Co., Ltd
1301, No.251,Xiaomuqiao Road, Shanghai,
200032, China
Tel: 86-21-5529-0222
Fax: 86-21-5206-6939
sales@apacer.com.cn

India

Apacer Technologies Pvt Ltd,
535, 1st Floor, 8th cross, JP Nagar 3rd Phase,
Bangalore – 560078, India
Tel: 91-80-4152-9061
sales_india@apacer.com