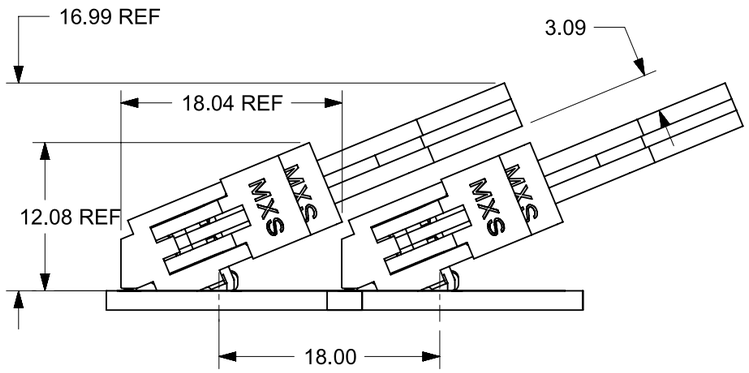

MINIMUM HEIGHT OF SOCKET WITH
MODULE CARD HEIGHT OF 30.00mm
AND THICKNESS OF 4mm.

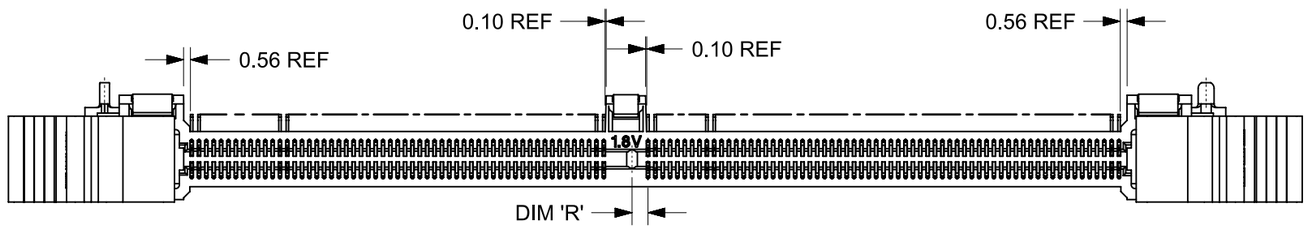

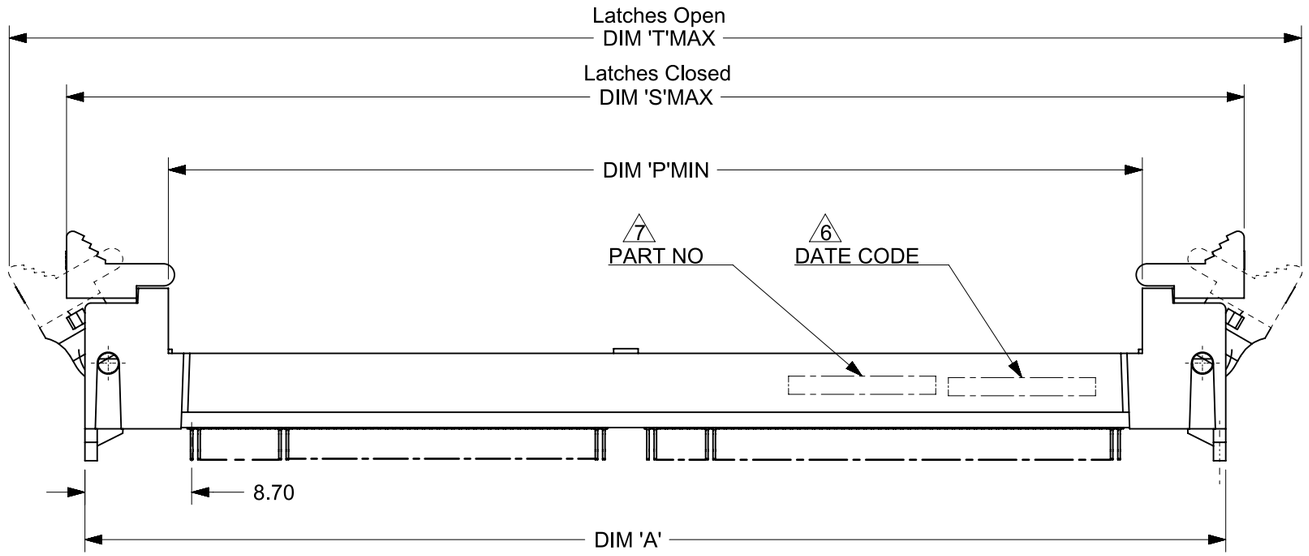

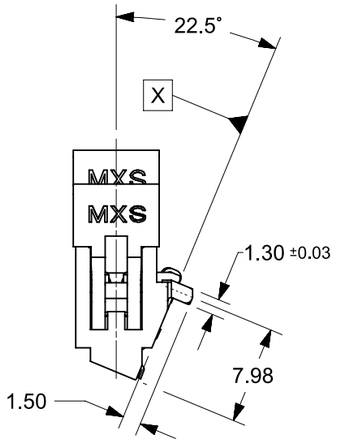

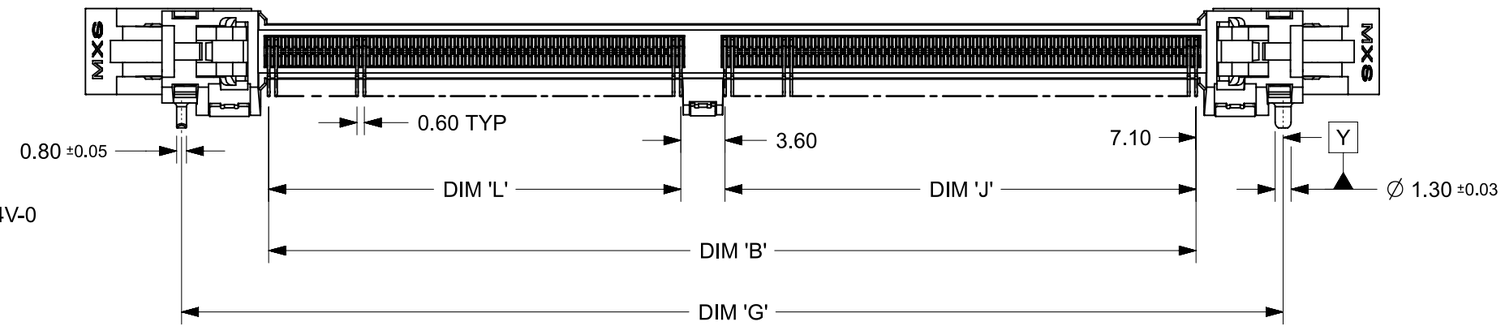

NOTES :
1. MATERIAL :
   HOUSING : HIGH TEMPERATURE LIQUID CRYSTAL POLYMER, UL94V-0
   COLOUR : BLACK
   CONTACTS : COPPER ALLOY
   LATCHES : HIGH TEMPERATURE NYLON, UL94V-0
   COLOUR : NATURAL (OFF-WHITE)
   COVER : HIGH TEMPERATURE NYLON, UL 94V-0
   COLOUR : BLACK

2. FINISH
   CONTACTS : 0.76 MICROMETER (30 MICROINCH) MIN GOLD OVER
   1.25 MICROMETER (50 MICROINCH) MIN NICKEL
   SMT TAIL : 2.54 MICROMETER (100 MICROINCH) MIN TIN OVER
   1.25 MICROMETER (50 MICROINCH) MIN NICKEL
3. ACCEPTS 1.0mm THICK MEMORY MODULE PER JEDEC MO-244 FOR 244 CKTS AND MO-258 FOR 200 CKTS.
4. PRODUCT SPECIFICATION : PS-78035-001.
5. PACKING SPECIFICATION: SEE TABLE IN SHEET 4.
6. DATE CODE SHALL BE MARKED LEGIBLY AS SHOWN : YY DDD.
7. PART NUMBER SHALL BE MARKED LEGIBLY AS SHOWN : 78035-XXXX (REFER TO TABLE).

THIS DRAWING CONTAINS INFORMATION THAT IS PROPRIETARY TO MOLEX ELECTRONIC TECHNOLOGIES, LLC AND SHOULD NOT BE USED WITHOUT WRITTEN PERMISSION

DIMENSION UNITS	SCALE
MM	NTS

GENERAL TOLERANCES (UNLESS SPECIFIED)

	MM	INCH
4 PLACES	±	±
3 PLACES	±	±
2 PLACES	± 0.130	±
1 PLACE	± 0.25	±
0 PLACES	±	±
ANGULAR TOL	± 1°	

DRAFT WHERE APPLICABLE MUST REMAIN WITHIN DIMENSIONS

CURRENT REV DESC: REMOVED OBSOLETED PART NUMBERS AS PER PCN#515181

STATUS: Production
DRWN: Vishal Ramesh Hosur 2024-07-03
CHK'D: Ganesh Rao B 2024-08-20
APPR: Gurunandan GA 2024-08-20

INITIAL REVISION:
DRWN: YTYANG01 2005/08/12
APPR: GGLEE 2005/08/25

molex

MINI DIMM, 0.60MM PITCH
200/244 CKTS, REV. ANGLE 22.5 DEG, SMT

PRODUCT CUSTOMER DRAWING

DOCUMENT NUMBER	DOC TYPE	DOC PART	REVISION
SD-78035-001	PSD	001	H1

THIRD ANGLE PROJECTION	DRAWING	SERIES	MATERIAL NUMBER	CUSTOMER	SHEET NUMBER
	A3-SIZE	78035	SEE TABLE	GENERAL MARKET	1 OF 4

FORMAT: Mediega-TC-tb-prod-A3
REVISION: B
DATE: 2023/10/23

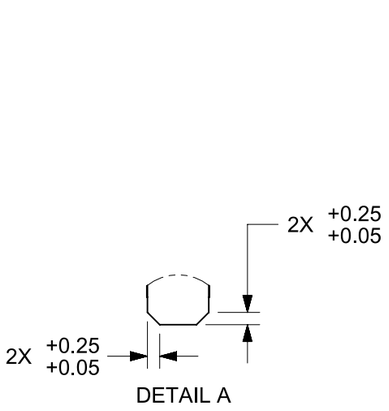

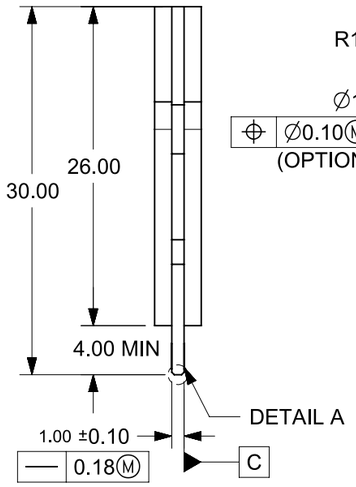

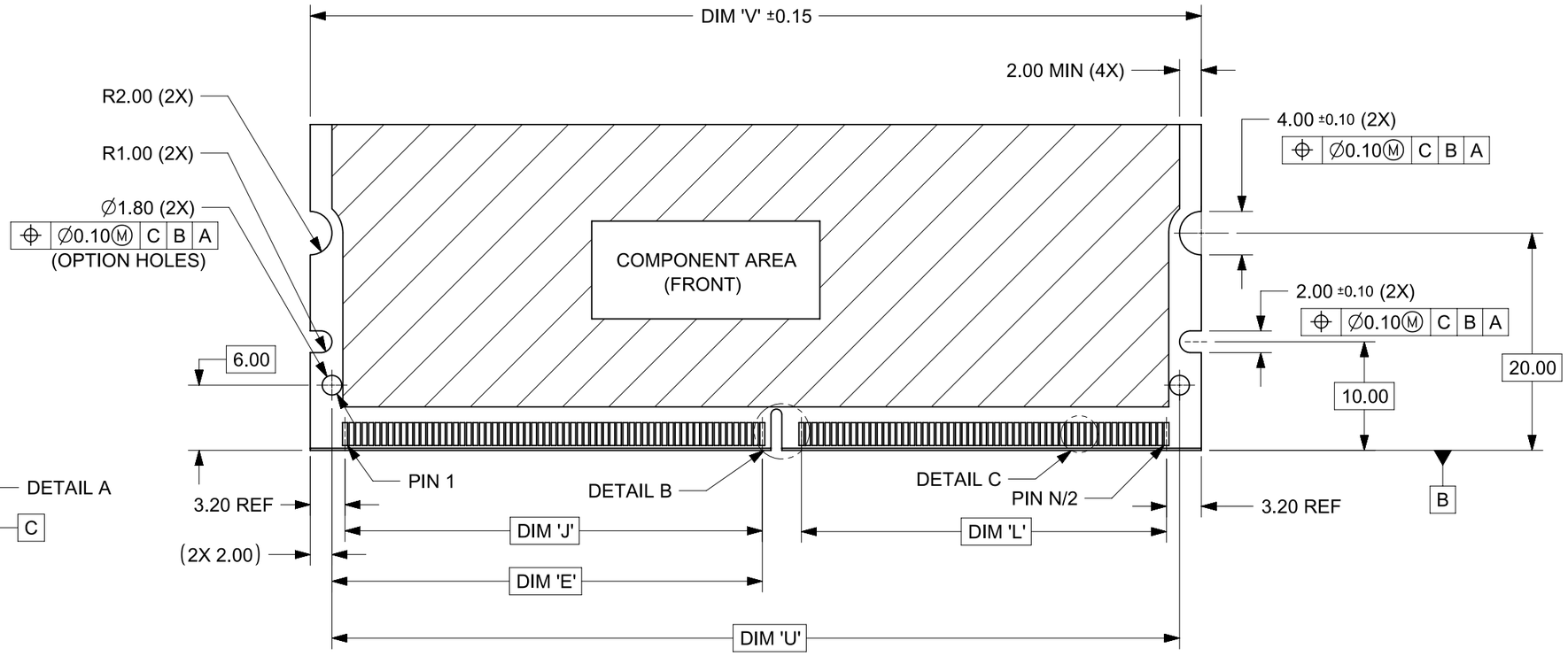

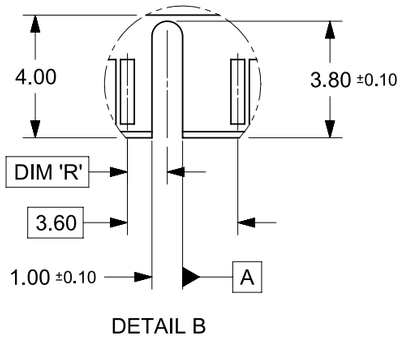

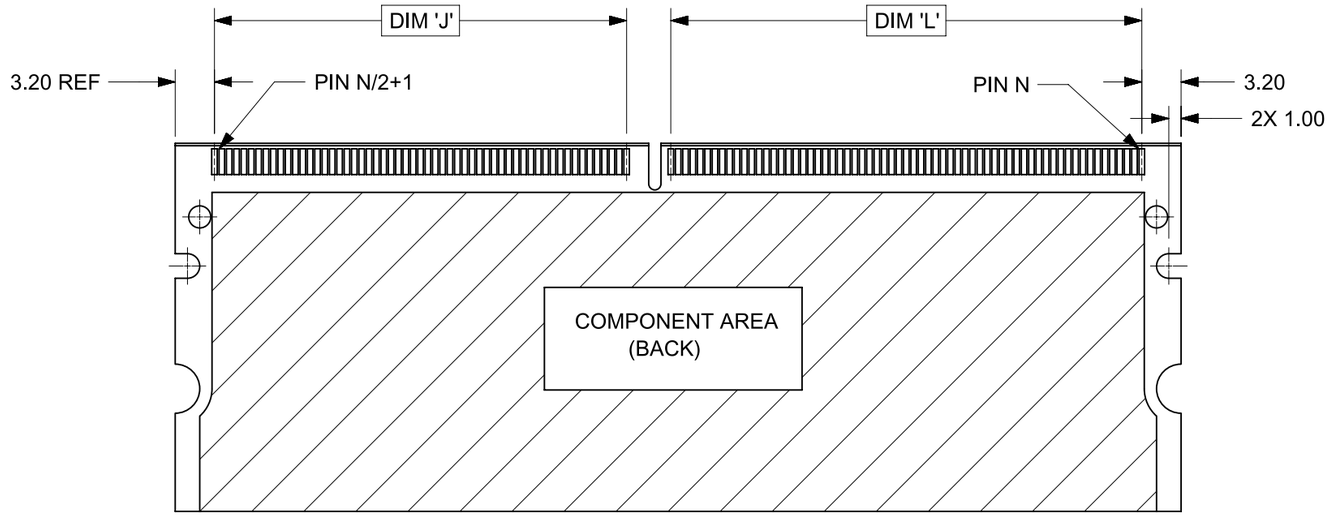

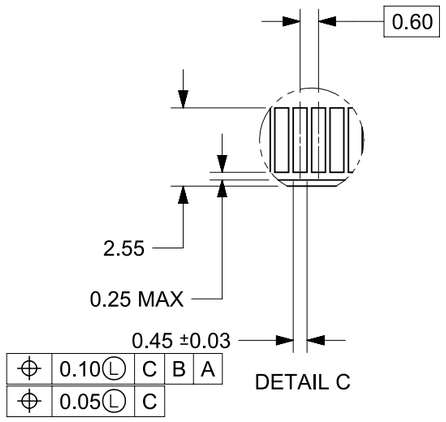

THIS DRAWING CONTAINS INFORMATION THAT IS PROPRIETARY TO MOLEX ELECTRONIC TECHNOLOGIES, LLC AND SHOULD NOT BE USED WITHOUT WRITTEN PERMISSION

DIMENSION UNITS	MM
SCALE	NTS

GENERAL TOLERANCES (UNLESS SPECIFIED)

	MM	INCH
4 PLACES	±	±
3 PLACES	±	±
2 PLACES	± 0.130	±
1 PLACE	± 0.25	±
0 PLACES	±	±
ANGULAR TOL	± 1°	

DRAFT WHERE APPLICABLE MUST REMAIN WITHIN DIMENSIONS

CURRENT REV DESC: REMOVED OBSOLETED PART NUMBERS AS PER PCN#515181

STATUS: Production

DRWN: Vishal Ramesh Hosur 2024-07-03
CHK'D: Ganesh Rao B 2024-08-20
APPR: Gurunandan GA 2024-08-20

INITIAL REVISION:
DRWN: YTYANG01 2005/08/12
APPR: GGLEE 2005/08/25

molex

MINI DIMM, 0.60MM PITCH
200/244 CKTS, REV. ANGLE 22.5 DEG, SMT

PRODUCT CUSTOMER DRAWING

DOCUMENT NUMBER	DOC TYPE	DOC PART	REVISION
SD-78035-001	PSD	001	H1

THIRD ANGLE PROJECTION	DRAWING	SERIES	MATERIAL NUMBER	CUSTOMER	SHEET NUMBER
	A3-SIZE	78035	SEE TABLE	GENERAL MARKET	2 OF 4

FORMAT: Mx4ega-TC-tb-prod-A3
REVISION: B
DATE: 2023/10/23

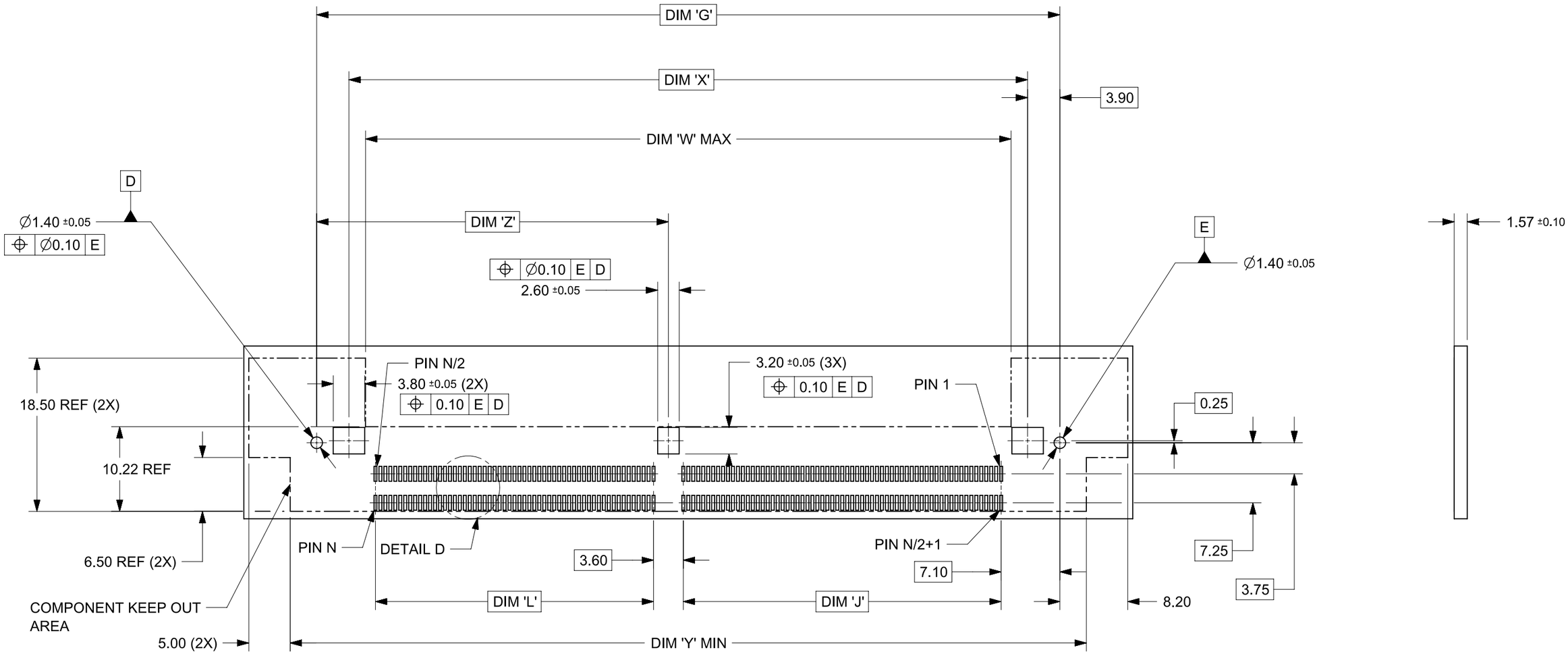

RECOMMENDED PCB LAYOUT

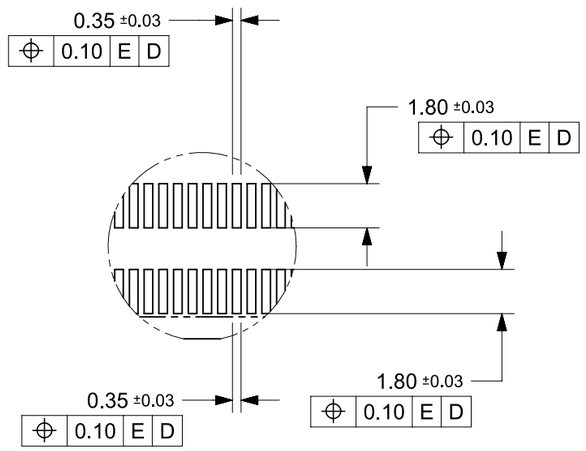

DETAIL D

THIS DRAWING CONTAINS INFORMATION THAT IS PROPRIETARY TO MOLEX ELECTRONIC TECHNOLOGIES, LLC AND SHOULD NOT BE USED WITHOUT WRITTEN PERMISSION

DIMENSION UNITS	SCALE
MM	NTS

GENERAL TOLERANCES (UNLESS SPECIFIED)

	MM	INCH
4 PLACES	±	±
3 PLACES	±	±
2 PLACES	± 0.130	±
1 PLACE	± 0.25	±
0 PLACES	±	±
ANGULAR TOL	±	1°

DRAFT WHERE APPLICABLE MUST REMAIN WITHIN DIMENSIONS

CURRENT REV DESC: REMOVED OBSOLETED PART NUMBERS AS PER PCN#515181

STATUS: Production
DRWN: Vishal Ramesh Hosur 2024-07-03
CHK'D: Ganesh Rao B 2024-08-20
APPR: Gurunandan GA 2024-08-20

INITIAL REVISION:
DRWN: YTYANG01 2005/08/12
APPR: GGLEE 2005/08/25

THIRD ANGLE PROJECTION

DRAWING	SERIES
A3-SIZE	78035

molex

MINI DIMM, 0.60MM PITCH
200/244 CKTS, REV. ANGLE 22.5 DEG, SMT

PRODUCT CUSTOMER DRAWING

DOCUMENT NUMBER	DOC TYPE	DOC PART	REVISION
SD-78035-001	PSD	001	H1

MATERIAL NUMBER	CUSTOMER	SHEET NUMBER
SEE TABLE	GENERAL MARKET	3 OF 4

FORMAT: Met-lega-TC-tb-prod-A3
REVISION: B
DATE: 2023/10/23

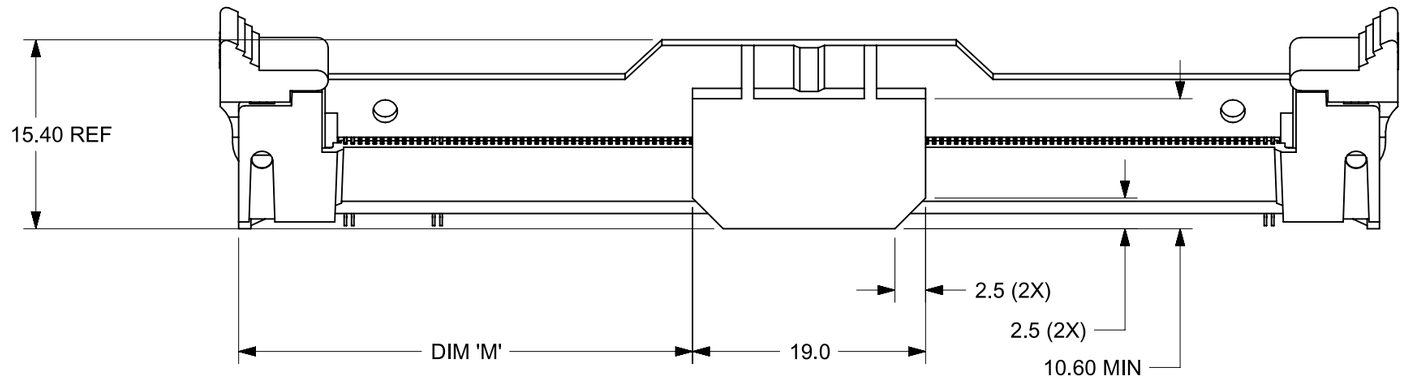

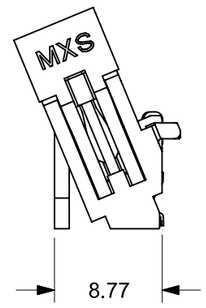

SHOW WITH PICK & PLACE COVER

CKT SIZE 'N'	PART NUMBER	MODULE CARD	VOLTAGE KEY	DIM 'R'	DIM 'E'	DIM 'J'	DIM 'L'	DIM 'M'	DIM 'P'	DIM 'G'	DIM 'S'	DIM 'T'	DIM 'U'	DIM 'V'	DIM 'W'	DIM 'X'	DIM 'Y'	DIM 'Z'	DIM 'A'	DIM 'B'	TRAY P/N PACKAGING SPEC
244	78035-0001	DDR2	1.8 V	1.30	39.60	38.40	33.60	37.0	79.0	89.80	96.0	106.20	78.00	82.00	78.0	82.00	96.20	42.50	93.0	75.60	89990-8198 89990-8199 PK-78035-001
	78035-0301	DDR3	1.5 V	2.30																	
	78035-6301																				78888-8026 PK-78035-003 (HARDTRAY)

THIS DRAWING CONTAINS INFORMATION THAT IS PROPRIETARY TO MOLEX ELECTRONIC TECHNOLOGIES, LLC AND SHOULD NOT BE USED WITHOUT WRITTEN PERMISSION

DIMENSION UNITS: MM
SCALE: NTS

GENERAL TOLERANCES (UNLESS SPECIFIED)

	MM	INCH
4 PLACES	±	±
3 PLACES	±	±
2 PLACES	± 0.130	±
1 PLACE	± 0.25	±
0 PLACES	±	±
ANGULAR TOL	± 1°	

DRAFT WHERE APPLICABLE MUST REMAIN WITHIN DIMENSIONS

CURRENT REV DESC: REMOVED OBSOLETED PART NUMBERS AS PER PCN#515181

STATUS: Production
DRWN: Vishal Ramesh Hosur 2024-07-03
CHK'D: Ganesh Rao B 2024-08-20
APPR: Gurunandan GA 2024-08-20

INITIAL REVISION:
DRWN: YTYANG01 2005/08/12
APPR: GGLEE 2005/08/25

THIRD ANGLE PROJECTION | DRAWING: A3-SIZE | SERIES: 78035

molex

MINI DIMM, 0.60MM PITCH
200/244 CKTS, REV. ANGLE 22.5 DEG, SMT

PRODUCT CUSTOMER DRAWING

DOCUMENT NUMBER	DOC TYPE	DOC PART	REVISION
SD-78035-001	PSD	001	H1

MATERIAL NUMBER	CUSTOMER	SHEET NUMBER
SEE TABLE	GENERAL MARKET	4 OF 4

FORMAT: Mel-lega-TC-tb-prod-A3
REVISION: B
DATE: 2023/10/23