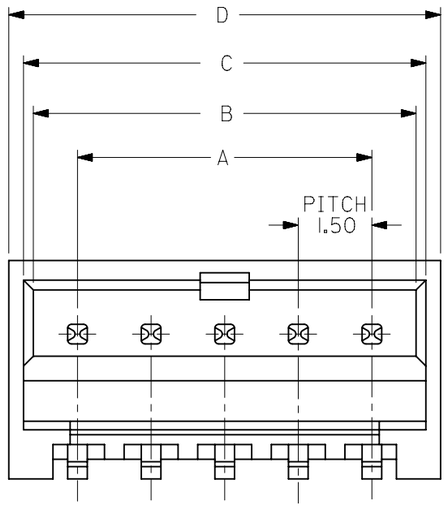

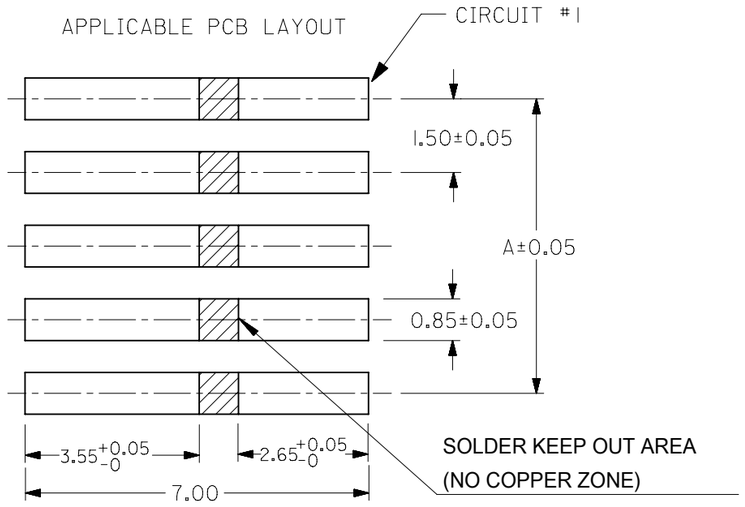

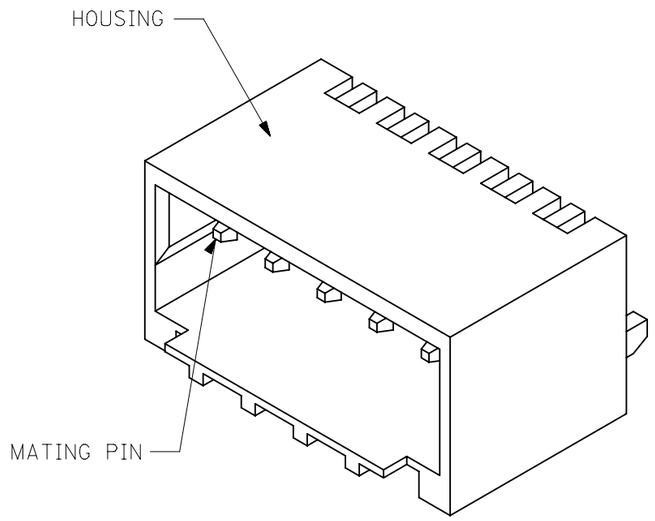

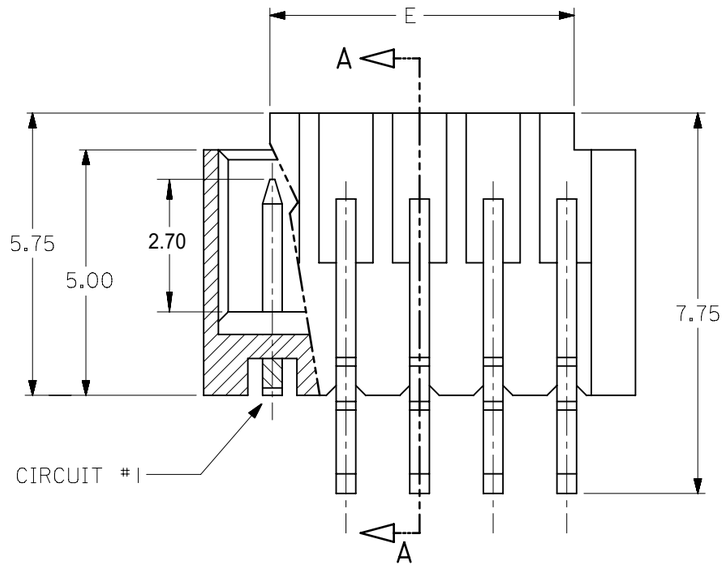

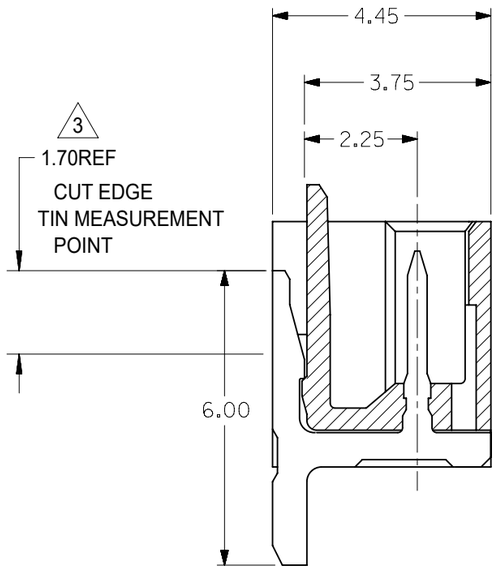

SECTION A-A

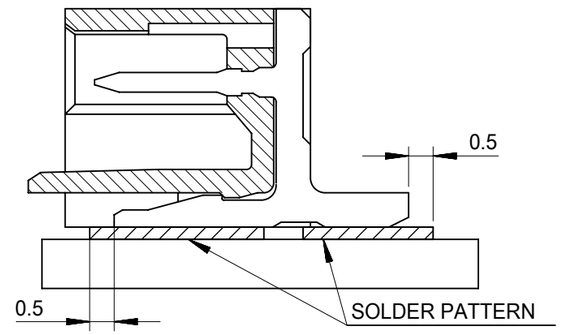

MOUNTING POSITION OF THE CONNECTOR

NOTES:
1. MATERIALS:
   HOUSING : GLASS-FILLED LIQUID CRYSTAL POLYMER,
   UL RATED 94V-0
   COLOR: BEIGE
   PINS: BRASS ALLOY, C26000
2. PLATING: 2.54µM MIN. TIN OVER 1.27µM MIN. NICKEL EXCEPT AT
   CUT-EDGE WHERE THICKNESS CAN BE 1.90µM MIN.
3. CUT-EDGE TIN MEASUREMENT POINT.
4. DRAWING SHOWS PLUG WITH 5 CIRCUITS.
5. HEADER TO BE USED WITH CRIMP HOUSING, P/N 87439
   AND CRIMP TERMINAL, P/N 87421
6. PRODUCT SPEC. PS-78047-001 APPLIES.

GENERAL TOLERANCES (UNLESS SPECIFIED)	
10 UNDER	± 0.20
10 OVER 30 UNDER	± 0.20
30 OVER	± 0.20
ANGULAR ±3 °	

DRAFT WHERE APPLICABLE MUST REMAIN WITHIN DIMENSIONS

THIS DRAWING CONTAINS INFORMATION THAT IS PROPRIETARY TO MOLEX ELECTRONIC TECHNOLOGIES, LLC AND SHOULD NOT BE USED WITHOUT WRITTEN PERMISSION

DIMENSION UNITS	SCALE
mm	NTS

GENERAL TOLERANCES (UNLESS SPECIFIED)		
ANGULAR TOL	±	3.0 °
4 PLACES	±	0.2
3 PLACES	±	0.2
2 PLACES	±	0.2
1 PLACE	±	
0 PLACES	±	

DRAFT WHERE APPLICABLE MUST REMAIN WITHIN DIMENSIONS

CURRENT REV DESC: REMOVED OBSOLETED PART NUMBERS AS PER PCN#515932.

EC NO: 812554
DRWN: RAVINR1 2025/01/31
CHK'D: GGA 2025/02/25
APPR: GGA 2025/02/25

INITIAL REVISION:
DRWN: SKANG 2007/07/30
APPR: MLONG 2007/07/31

THIRD ANGLE PROJECTION | DRAWING: A3-SIZE | SERIES: 78048

molex

HEADER, 1.50MM PITCH
W-T-B, R/A, SMT

PRODUCT CUSTOMER DRAWING

DOCUMENT NUMBER	DOC TYPE	DOC PART	REVISION
SD-78048-001	PSD	001	C2

MATERIAL NUMBER	CUSTOMER	SHEET NUMBER
SEE TABLE	GENERAL MARKET	1 OF 3

DOCUMENT STATUS	P1	RELEASE DATE	2025/02/25 06:03:35

FORMAT: master-tb-prod-A3
REVISION: J1
DATE: 2021/05/01

HOUSING COLOUR	HEADER IN TAPE & REEL (W/O HOLE)	STATUS	CKT SIZE	A	B	C	D	E
BIEGE	78048-0243	M	2	1.50	3.30	3.70	4.30	1.70
	78048-0343	M	3	3.00	4.80	5.20	5.80	3.20
	78048-0443	M	4	4.50	6.30	6.70	7.30	4.70
	78048-0543	M	5	6.00	7.80	8.20	8.80	6.20
	78048-0643	M	6	7.50	9.30	9.70	10.30	7.70
	78048-0743	M	7	9.00	10.80	11.20	11.80	9.20
	78048-0843	M	8	10.50	12.30	12.70	13.30	10.70
	78048-0943	M	9	12.00	13.80	14.20	14.80	12.20
	78048-1043	M	10	13.50	15.30	15.70	16.30	13.70
	78048-1143	M	11	15.00	16.80	17.20	17.80	15.20
	----------	M	12	16.50	18.30	18.70	19.30	16.70
	78048-1343	M	13	18.00	19.80	20.20	20.80	18.20
	78048-1443	M	14	19.50	21.30	21.70	22.30	19.70
	78048-1543	M	15	21.00	22.80	23.20	23.80	21.20

NOTES:

1. REFER SHEET 3 FOR EMBOSSED TAPE POCKET HOLE DETAIL & POSITION

GENERAL TOLERANCES (UNLESS SPECIFIED)	
10 UNDER	± 0.20
10 OVER 30 UNDER	± 0.20
30 OVER	± 0.20
ANGULAR	±3 °

DRAFT WHERE APPLICABLE MUST REMAIN WITHIN DIMENSIONS

THIS DRAWING CONTAINS INFORMATION THAT IS PROPRIETARY TO MOLEX ELECTRONIC TECHNOLOGIES, LLC AND SHOULD NOT BE USED WITHOUT WRITTEN PERMISSION

DIMENSION UNITS	SCALE
mm	NTS

GENERAL TOLERANCES (UNLESS SPECIFIED)		
ANGULAR TOL	±	3.0 °
4 PLACES	±	0.2
3 PLACES	±	0.2
2 PLACES	±	0.2
1 PLACE	±	
0 PLACES	±	

DRAFT WHERE APPLICABLE MUST REMAIN WITHIN DIMENSIONS

CURRENT REV DESC: REMOVED OBSOLETED PART NUMBERS AS PER PCN#515932.

EC NO: 812554
DRWN: RAVINR1 2025/01/31
CHK'D: GGA 2025/02/25
APPR: GGA 2025/02/25

INITIAL REVISION:
DRWN: SKANG 2007/07/18
APPR: MLONG 2007/07/25

molex

HEADER, 1.50MM PITCH
W-T-B, R/A, SMT

PRODUCT CUSTOMER DRAWING

DOCUMENT NUMBER	DOC TYPE	DOC PART	REVISION
SD-78048-001	PSD	001	C2

THIRD ANGLE PROJECTION	DRAWING	SERIES	MATERIAL NUMBER	CUSTOMER	SHEET NUMBER
	A3-SIZE	78048	SEE TABLE	GENERAL MARKET	2 OF 3

DOCUMENT STATUS	P1	RELEASE DATE	2025/02/25 06:03:35

FORMAT: master-tb-prod-A3
REVISION: J1
DATE: 2021/05/01

15	44	20.20	100	44.40	50.40
11, 12, 13, 14	32	14.20	100	32.40	38.40
7, 8, 9, 10	24	11.50	100	24.40	30.40
2, 3, 4, 5, 6	16	7.50	100	16.40	22.40
CIRCUIT SIZE	A	B	N	G	T MAX

EMBOSSED CARRIER TAPE PACKING DETAILS

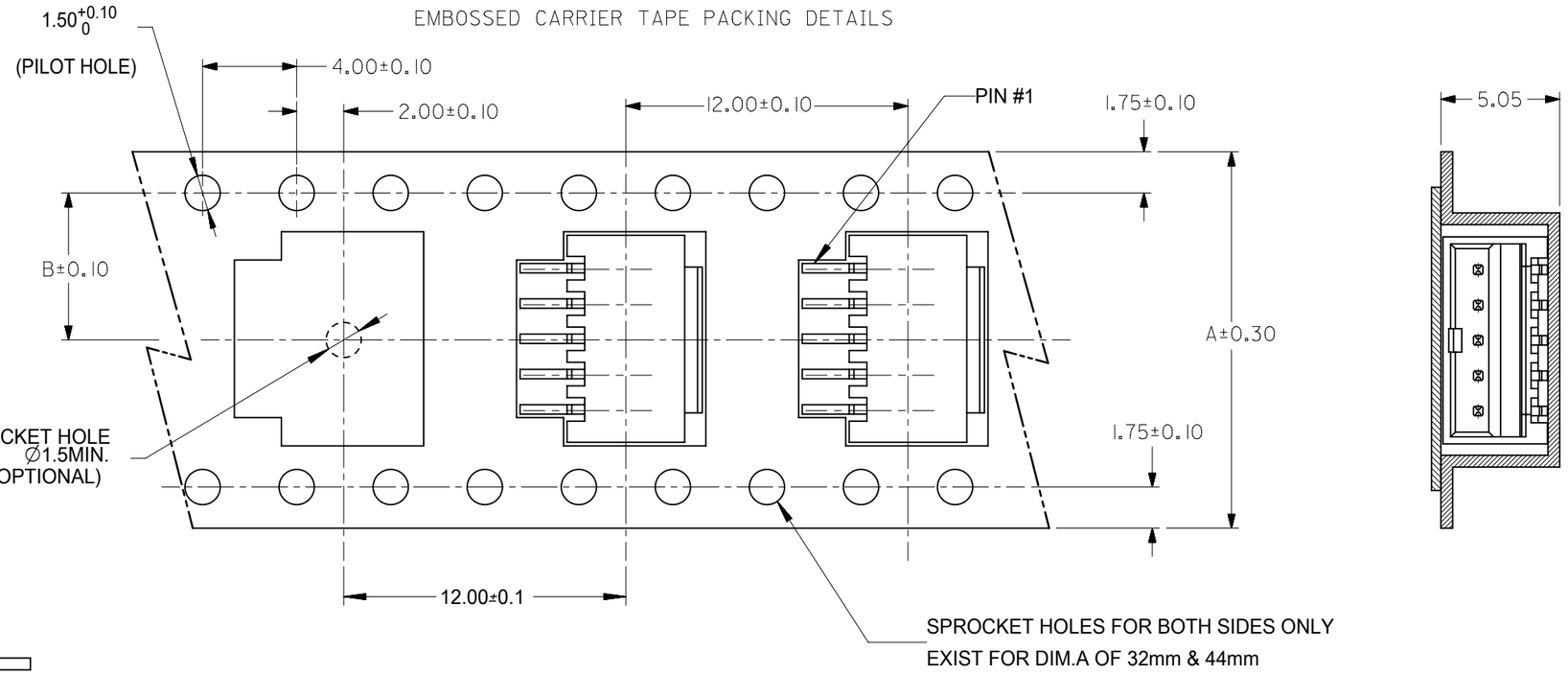

REEL DETAILS

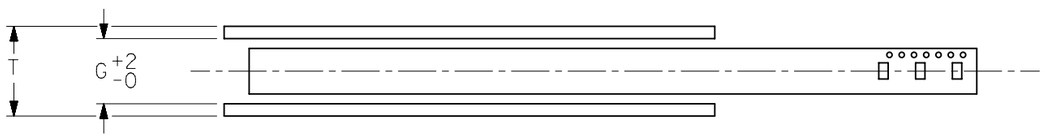

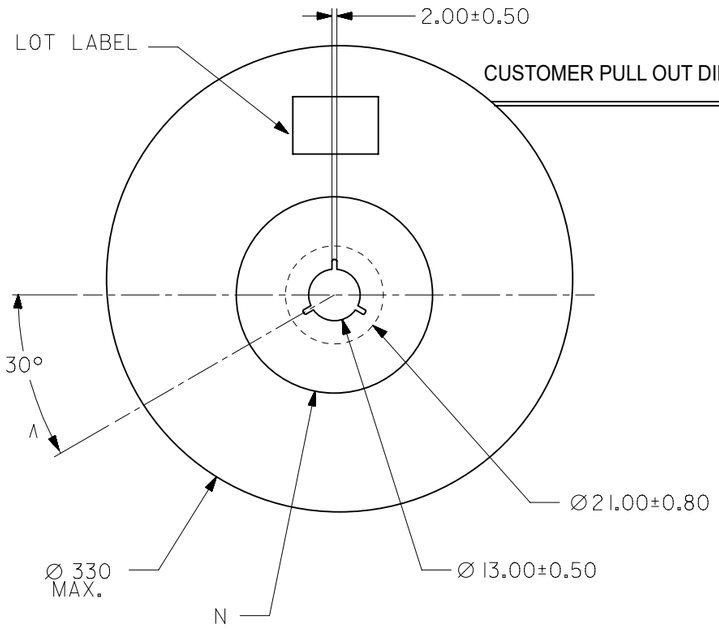

NOTES:

1. LEADER AND TRAILER TAPE

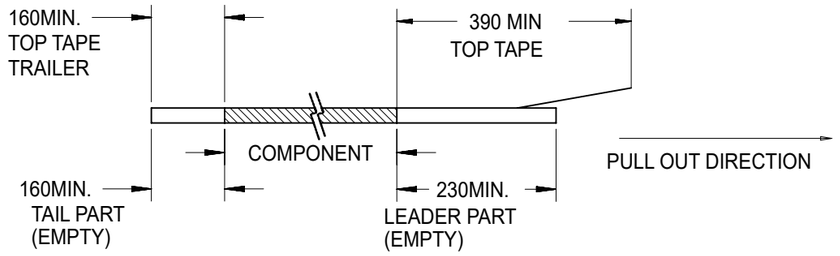

2. PEELING OFF FORCE OF THE TOP TAPE: 20-80gf.
   (PEELING DIRECTION AS SHOWN IN FOLLOWING FIGURE)

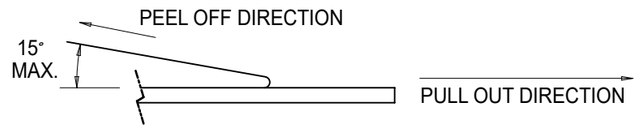

3. PACKAGING STANDARD IS AS PER EIA-481.
4. TAPE & REEL QUANTITY = 1000PCS/REEL
5. THE TAPE IS TREATED FOR ANTI-STATIC

GENERAL TOLERANCES (UNLESS SPECIFIED)		
10 UNDER	± 0.20	
10 OVER 30 UNDER	± 0.20	
30 OVER	± 0.20	
ANGULAR	±3	°

DRAFT WHERE APPLICABLE MUST REMAIN WITHIN DIMENSIONS

THIS DRAWING CONTAINS INFORMATION THAT IS PROPRIETARY TO MOLEX ELECTRONIC TECHNOLOGIES, LLC AND SHOULD NOT BE USED WITHOUT WRITTEN PERMISSION

DIMENSION UNITS	SCALE
mm	NTS

GENERAL TOLERANCES (UNLESS SPECIFIED)		
ANGULAR TOL	±	3.0 °
4 PLACES	±	0.2
3 PLACES	±	0.2
2 PLACES	±	0.2
1 PLACE	±	
0 PLACES	±	

DRAFT WHERE APPLICABLE MUST REMAIN WITHIN DIMENSIONS

CURRENT REV DESC: REMOVED OBSOLETED PART NUMBERS AS PER PCN#515932.

EC NO: 812554
DRWN: RAVINR1 2025/01/31
CHK'D: GGA 2025/02/25
APPR: GGA 2025/02/25

INITIAL REVISION:
DRWN: SKANG 2007/07/18
APPR: MLONG 2007/07/25

THIRD ANGLE PROJECTION | DRAWING: A3-SIZE | SERIES: 78048

molex

HEADER, 1.50MM PITCH
W-T-B, R/A, SMT

PRODUCT CUSTOMER DRAWING

DOCUMENT NUMBER	DOC TYPE	DOC PART	REVISION
SD-78048-001	PSD	001	C2

MATERIAL NUMBER	CUSTOMER	SHEET NUMBER
SEE TABLE	GENERAL MARKET	3 OF 3

DOCUMENT STATUS	P1	RELEASE DATE	2025/02/25 06:03:35

FORMAT: master-ib-prod-A3
REVISION: J1
DATE: 2021/05/01