引き出し方向

PULL OUT DIRECTION

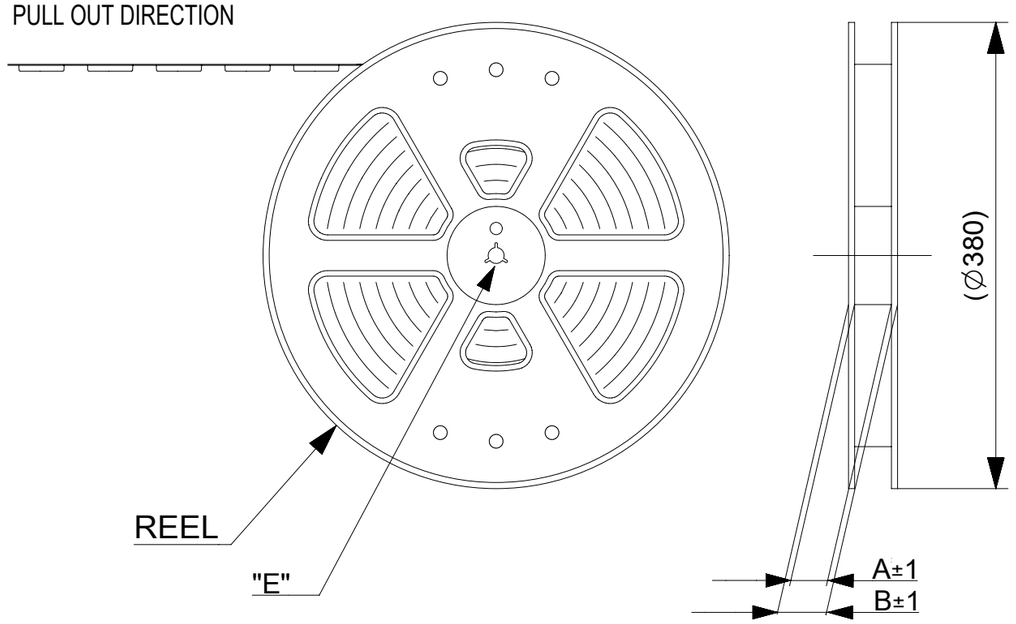


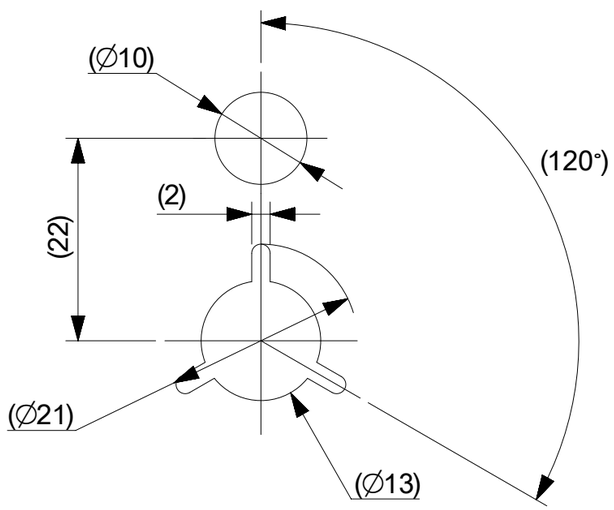


DETAIL "E"

NOTES

ELV&RoHS COMPLINT

1. 梱包数量： 2000個 / リール
   NUMBER OF CONNECTORS : 2000 PCS/REEL
2. リードテープ長さ
   LEAD TAPE LENGTH

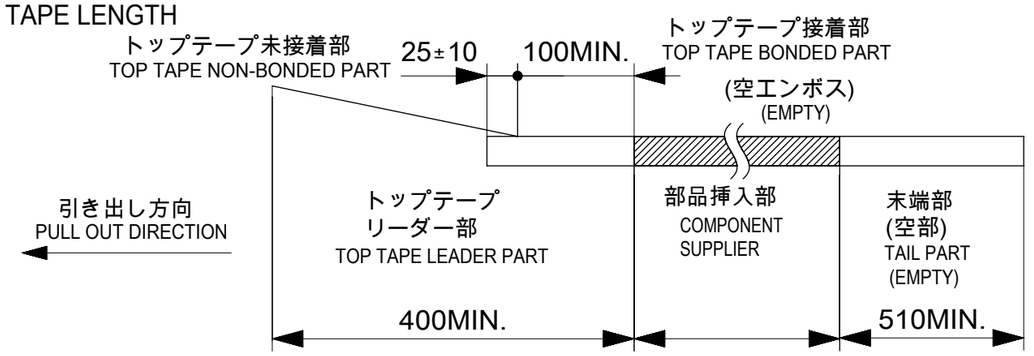


3. トップテープの剥離強度については、IEC60286-3に準拠。
   TOP TAPE PEEL FORCE IS DEFINED BY IEC60286-3.
4. 製品詳細寸法については、図面781191001をご参照ください。
   REFER TO THE 781191001 ABOUT DIMENSIONS IN DETAIL.
5. 材料
   キャリアテープ：ポリスチレン(PS)
   トップテープ　：PET,OTHER
   リール　　：ポリスチレン(PS)(リサイクル材を含む)
   MATERIAL
   CARRIER TAPE : POLYSTYRENE(PS)
   TOP TAPE : PET,OTHER
   REEL : POLYSTYRENE(PS) (RECYCLE MATERIAL CONTAINED)
6. 環境負荷物質の管理のため「化学物質ガイドライン」の内容を満足すること。
   "CHEMICAL SUBSTANCES GUIDELINE" SHALL BE APPLIED FOR MANAGEMENT OF ENVIRONMENTAL HAZARDOUS MATERIALS.

CONNECTOR SERIES NO. 78119**15

THIS DRAWING CONTAINS INFORMATION THAT IS PROPRIETARY TO MOLEX ELECTRONIC TECHNOLOGIES, LLC AND SHOULD NOT BE USED WITHOUT WRITTEN PERMISSION

| DIMENSION UNITS | SCALE |
|---|---|
| mm | ~~2:1~~ |

| GENERAL TOLERANCES (UNLESS SPECIFIED) | | |
|---|---|---|
| ANGULAR TOL | ± | 1.0 ° |
| 4 PLACES | ± | 0.1 |
| 3 PLACES | ± | 0.1 |
| 2 PLACES | ± | 0.1 |
| 1 PLACE | ± | 0.1 |
| 0 PLACES | ± | 0.1 |

DRAFT WHERE APPLICABLE MUST REMAIN WITHIN DIMENSIONS

CURRENT REV DESC:

EC NO: 677105
DRWN: NARENC 2021/09/07
CHK'D: TKON 2021/09/13
APPR: SHOSHIKAWA 2021/09/16

INITIAL REVISION:
DRWN: NASANUMA 2016/04/19
APPR: KMORIKAWA 2016/08/02

THIRD ANGLE PROJECTION | DRAWING: A3-SIZE | SERIES: 78119

molex

0.5 FPC CONN. N-ZIF ST SNBI EMBS TP PKG

PRODUCT CUSTOMER DRAWING

| DOCUMENT NUMBER | DOC TYPE | DOC PART | REVISION |
|---|---|---|---|
| 781190001 | PSD | 000 | B |

| MATERIAL NUMBER | CUSTOMER | SHEET NUMBER |
|---|---|---|
| | | 1 OF 3 |

| DOCUMENT STATUS | P1 | RELEASE DATE | 2021/09/16 03:08:08 |
|---|---|---|---|

FORMAT: master-lb-prod-A3
REVISION: J
DATE: 2020/01/14

ELV&RoHS COMPLINT

引き出し方向
PULL OUT DIRECTION

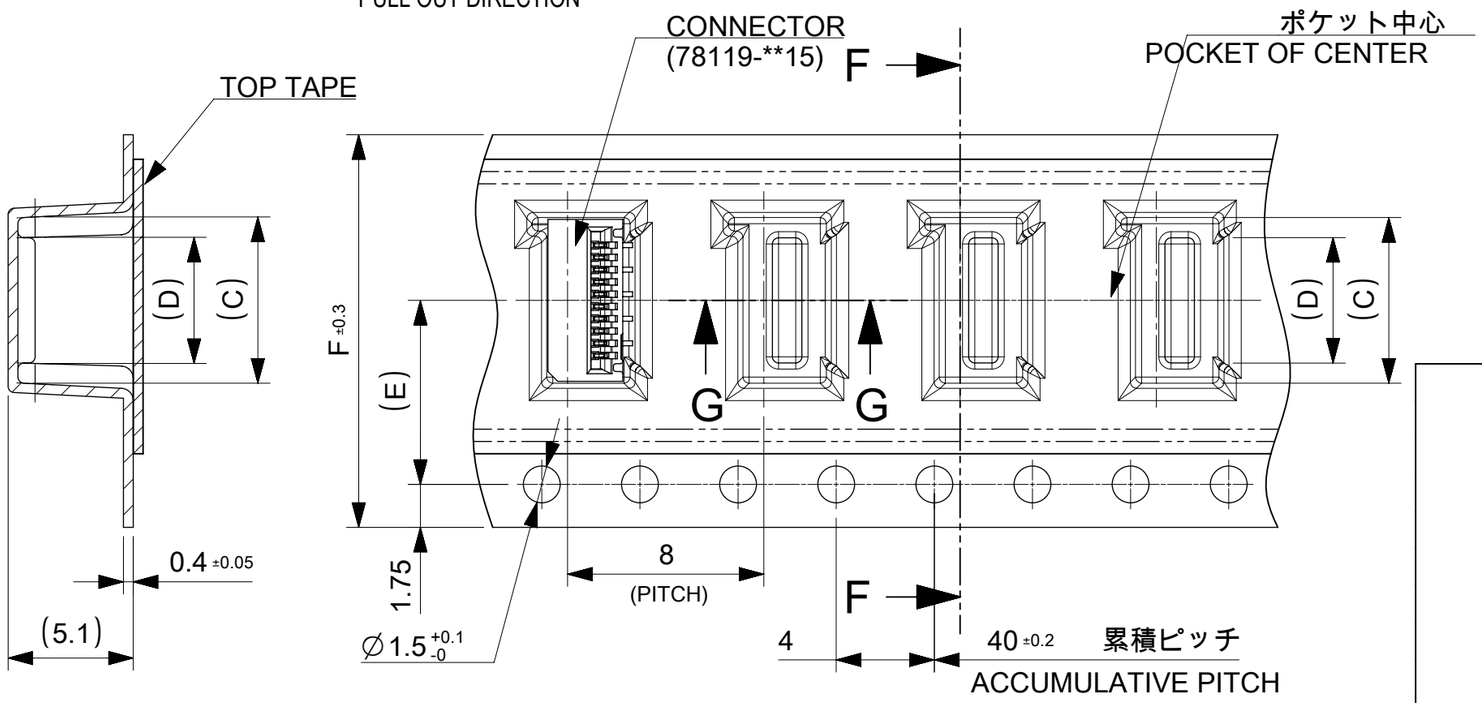


SECTION F-F

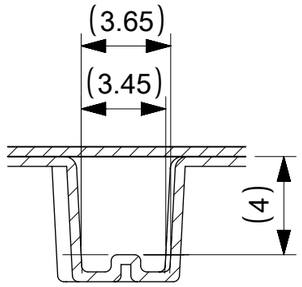


SECTION G-G

| F TAPE WIDTH | E | D | C | B | A | EMBOSSED PACKAGE オーダー番号 ORDER NO | CIRCUIT |
|---|---|---|---|---|---|---|---|
| 24 | 11.5 | 14.1 | 15.8 | 29.4 | 25.4 | 781192810 | 28 |
| | | 13.6 | 15.3 | | | 781192710 | 27 |
| | | 13.1 | 14.8 | | | 781192610 | 26 |
| | | 12.6 | 14.3 | | | 781192510 | 25 |
| | | 12.1 | 13.8 | | | 781192410 | 24 |
| | | 11.6 | 13.3 | | | 781192310 | 23 |
| | | 11.1 | 12.8 | | | 781192210 | 22 |
| | | 10.6 | 12.3 | | | 781192110 | 21 |
| | | 10.1 | 11.8 | | | 781192010 | 20 |
| | | 9.6 | 11.3 | | | 781191910 | 19 |
| | | 9.1 | 10.8 | | | 781191810 | 18 |
| | | 8.6 | 10.3 | | | 781191710 | 17 |
| | | 8.1 | 9.8 | | | 781191610 | 16 |
| | | 7.6 | 9.3 | | | 781191510 | 15 |
| 16 | 7.5 | 7.1 | 8.8 | 21.4 | 17.4 | 781191410 | 14 |
| | | 6.6 | 8.3 | | | 781191310 | 13 |
| | | 6.1 | 7.8 | | | 781191210 | 12 |
| | | 5.6 | 7.3 | | | 781191110 | 11 |
| | | 5.1 | 6.8 | | | 781191010 | 10 |
| | | 4.6 | 6.3 | | | 781190910 | 9 |
| | | 4.1 | 5.8 | | | 781190810 | 8 |
| | | 3.6 | 5.3 | | | 781190710 | 7 |
| | | 3.1 | 4.8 | | | 781190610 | 6 |

# 16mm, 24mm幅キャリアテープ

# 16mm, 24mm WIDTH CARIER TAPE

CONNECTOR SERIES NO. 78119**15

THIS DRAWING CONTAINS INFORMATION THAT IS PROPRIETARY TO MOLEX ELECTRONIC TECHNOLOGIES, LLC AND SHOULD NOT BE USED WITHOUT WRITTEN PERMISSION

| DIMENSION UNITS | SCALE |
|---|---|
| mm | 4:1 |

GENERAL TOLERANCES (UNLESS SPECIFIED)

| | | |
|---|---|---|
| ANGULAR TOL | ± | 1.0 ° |
| 4 PLACES | ± | 0.1 |
| 3 PLACES | ± | 0.1 |
| 2 PLACES | ± | 0.1 |
| 1 PLACE | ± | 0.1 |
| 0 PLACES | ± | 0.1 |

DRAFT WHERE APPLICABLE MUST REMAIN WITHIN DIMENSIONS

CURRENT REV DESC:

EC NO: 677105
DRWN: NARENC 2021/09/07
CHK'D: TKON 2021/09/13
APPR: SHOSHIKAWA 2021/09/16

INITIAL REVISION:
DRWN: NASANUMA 2016/04/19
APPR: KMORIKAWA 2016/08/02

molex

0.5 FPC CONN. N-ZIF ST SNBI EMBS TP PKG

PRODUCT CUSTOMER DRAWING

| DOCUMENT NUMBER | DOC TYPE | DOC PART | REVISION |
|---|---|---|---|
| 781190001 | PSD | 000 | B |

| THIRD ANGLE PROJECTION | DRAWING | SERIES | MATERIAL NUMBER | CUSTOMER | SHEET NUMBER |
|---|---|---|---|---|---|
| | A3-SIZE | 78119 | | | 2 OF 3 |

| DOCUMENT STATUS | P1 | RELEASE DATE | 2021/09/16 03:08:08 |
|---|---|---|---|

FORMAT: master-tb-prod-A3
REVISION: J
DATE: 2020/01/14

ELV&RoHS COMPLINT

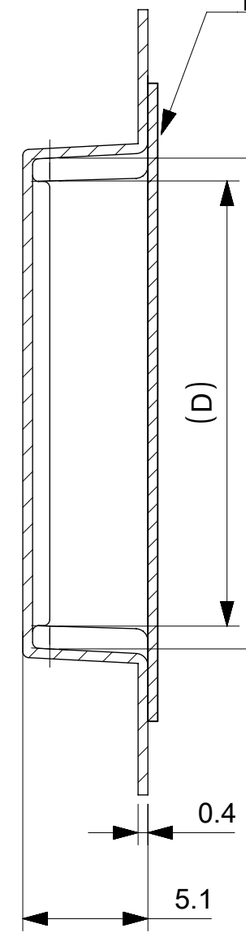


SECTION C-C

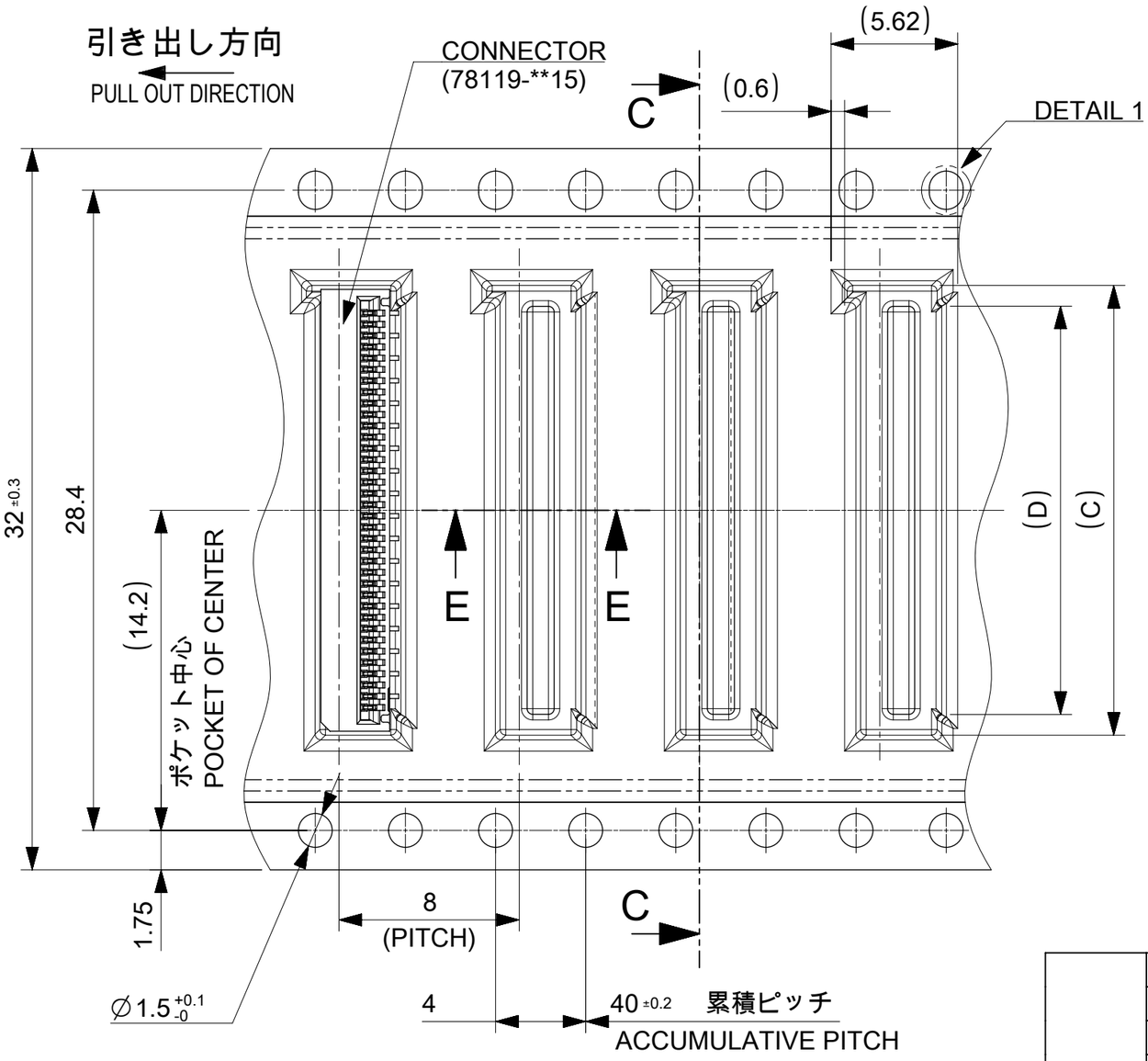


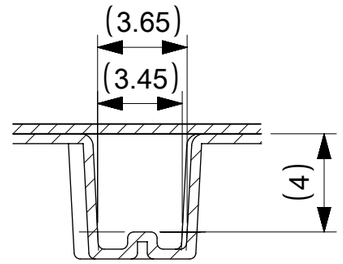


SECTION E-E

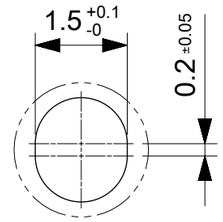


DETAIL 1
SCALE 10:1

| | | | | | | |
|---|---|---|---|---|---|---|
| 32 | 18.1 | 19.8 | 37.4 | 33.4 | 781193610 | 36 |
| | 17.6 | 19.3 | | | 781193510 | 35 |
| | 17.1 | 18.8 | | | 781193410 | 34 |
| | 16.6 | 18.3 | | | 781193310 | 33 |
| | 16.1 | 17.8 | | | 781193210 | 32 |
| | 15.6 | 17.3 | | | 781193110 | 31 |
| | 15.1 | 16.8 | | | 781193010 | 30 |
| | 14.6 | 16.3 | | | 781192910 | 29 |
| TAPE WIDTH | D | C | B | A | EMBOSSED PACKAGE オーダー番号 ORDER NO | CIRCUIT |

# 32mm幅キャリアテープ
# 32mm WIDTH CARRIER TAPE

CONNECTOR SERIES NO. 78119**15

THIS DRAWING CONTAINS INFORMATION THAT IS PROPRIETARY TO MOLEX ELECTRONIC TECHNOLOGIES, LLC AND SHOULD NOT BE USED WITHOUT WRITTEN PERMISSION

| | |
|---|---|
| DIMENSION UNITS | mm |
| SCALE | 4:1 |
| GENERAL TOLERANCES (UNLESS SPECIFIED) | |
| ANGULAR TOL | ± 1.0 ° |
| 4 PLACES | ± 0.1 |
| 3 PLACES | ± 0.1 |
| 2 PLACES | ± 0.1 |
| 1 PLACE | ± 0.1 |
| 0 PLACES | ± 0.1 |
| DRAFT WHERE APPLICABLE MUST REMAIN WITHIN DIMENSIONS | |

CURRENT REV DESC:

EC NO: 677105
DRWN: NARENC 2021/09/07
CHK'D: TKON 2021/09/13
APPR: SHOSHIKAWA 2021/09/16

INITIAL REVISION:
DRWN: NASANUMA 2016/04/19
APPR: KMORIKAWA 2016/08/02

THIRD ANGLE PROJECTION | DRAWING: A3-SIZE | SERIES: 78119

molex

0.5 FPC CONN. N-ZIF ST SNBI EMBS TP PKG

PRODUCT CUSTOMER DRAWING

| DOCUMENT NUMBER | DOC TYPE | DOC PART | REVISION |
|---|---|---|---|
| 781190001 | PSD | 000 | B |

| MATERIAL NUMBER | CUSTOMER | SHEET NUMBER |
|---|---|---|
| | | 3 OF 3 |

| DOCUMENT STATUS | P1 | RELEASE DATE | 2021/09/16 03:08:08 |
|---|---|---|---|

FORMAT: master-tb-prod-A3
REVISION: J
DATE: 2020/01/14

ELV&RoHS COMPLIANT

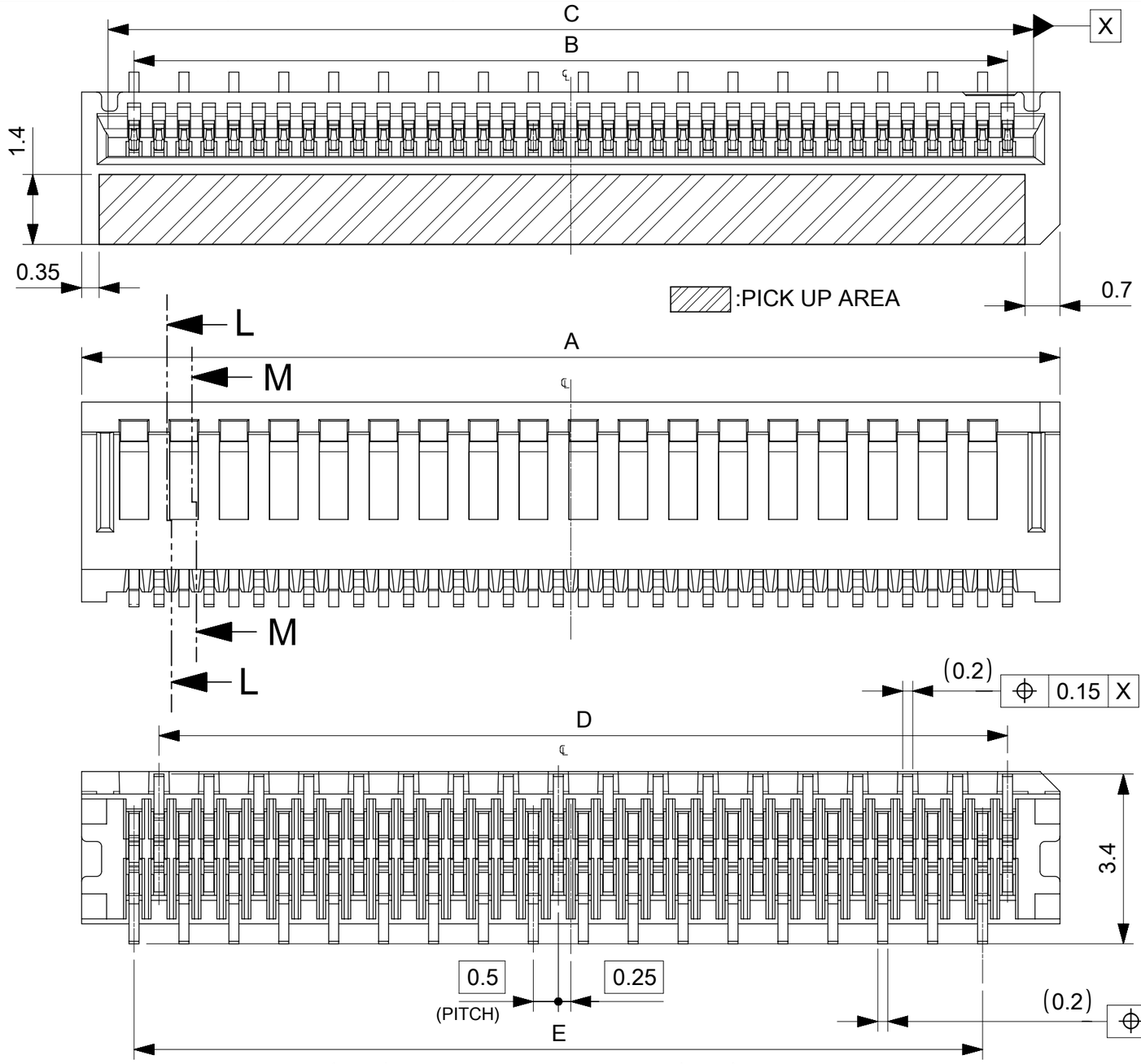


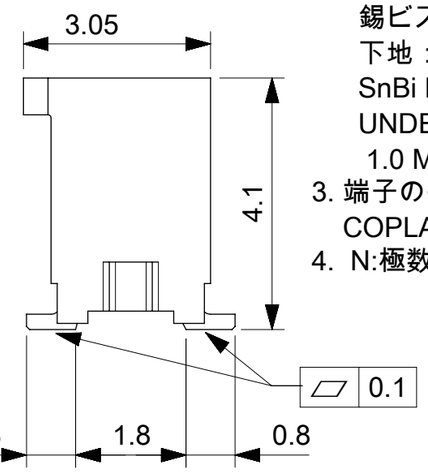


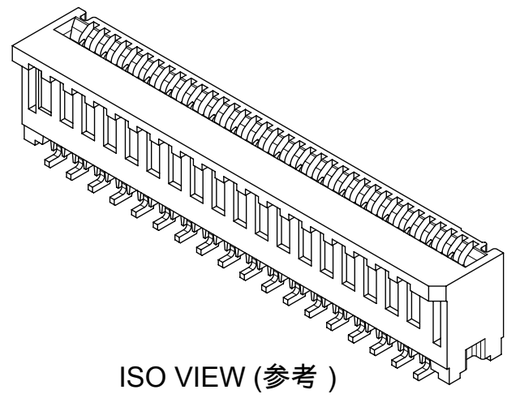

ISO VIEW (参考 )

NOTES

1. 使用材料 MATERIALS
   ハウジング　：液晶ポリマー(LCP)
   ガラス充填、UL94 V-0、黒色
   端子　：リン青銅　t=0.2mm
   HOUSING　:LIQUID QLYSTAL POLYMER(LCP)
   GLASS FILLED, UL94 V-0, BLACK
   TERMINAL:PHOSPHOR BRONZE t=0.2mm
2. メッキ仕様 PLATING
   端子 TERMINAL
   錫ビスマスメッキ 1.0μm以上
   下地：ニッケルメッキ 1.0μm以上
   SnBi PLATING 1.0 MICROMETER MINIMUM
   UNDER PLATING:Nickel PLATING
   1.0 MICROMETER MINIMUM
3. 端子の平坦度はテール部にて0.1mm以下とする。
   COPLANALITY OF SOLDER TAILS:0.1mmMAX.
4. N:極数　N:CIRCUIT

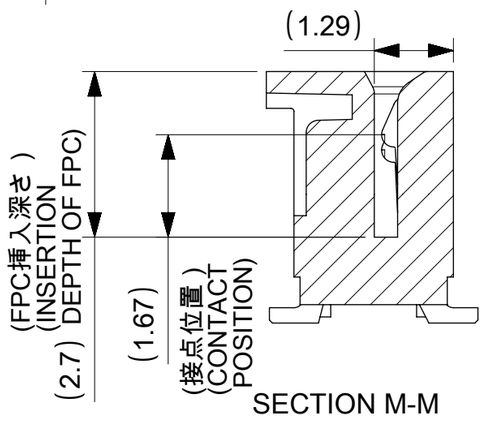


SECTION M-M

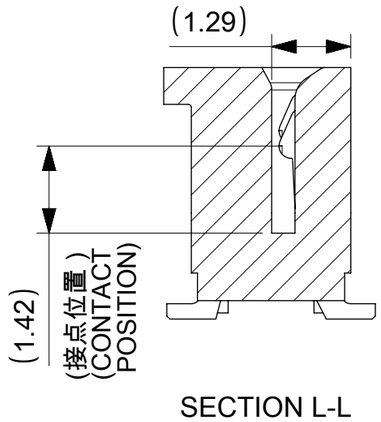


SECTION L-L

CONNECTOR SERIES NO. 78119**15

THIS DRAWING CONTAINS INFORMATION THAT IS PROPRIETARY TO MOLEX ELECTRONIC TECHNOLOGIES, LLC AND SHOULD NOT BE USED WITHOUT WRITTEN PERMISSION

| | | | |
|---|---|---|---|
| EC NO: | 107065 | 2016/08/02 | |
| DRWN: | NASANUMA | 2016/08/01 | |
| CHK'D: | YKOBAYASHI02 | 2016/01/25 | |
| APPR: | KMORIKAWA | | |

GENERAL TOLERANCES (UNLESS SPECIFIED)

ANGULAR TOL ± 1.0 °

| | |
|---|---|
| 4 PLACES | ± 0.1 |
| 3 PLACES | ± 0.1 |
| 2 PLACES | ± 0.1 |
| 1 PLACE | ± 0.1 |
| 0 PLACES | ± 0.1 |

DRAFT WHERE APPLICABLE MUST REMAIN WITHIN DIMENSIONS

REV: A

DIMENSION UNITS: MM　SCALE: 10:1

DRWN BY: NASANUMA　DATE: 2016/01/25

CHK'D BY: YKOBAYASHI02　DATE: 2016/08/01

APPR BY: KMORIKAWA　DATE: 2016/08/02

DRAWING SIZE: A3　THIRD ANGLE PROJECTION

molex

0.5 PITCH NON-ZIF CONN. SMT ST ASSY

PRODUCT CUSTOMER DRAWING

| SERIES | MATERIAL NUMBER | CUSTOMER |
|---|---|---|
| 78119 | | |

| DOCUMENT NUMBER | DOC TYPE | DOC PART | SHEET NUMBER |
|---|---|---|---|
| 781191001 | PSD | 000 | 1 OF 3 |

| RELEASE STATUS | P1 | RELEASE DATE | 02.08.2016　00:40:28 |
|---|---|---|---|

FORMAT: master-tb-prod-A3
REVISION: F
DATE: 2015/11/16

ELV & RoHS COMPLIANT

## 適合FPC/FFC推奨寸法
APPLICABLE FPC/FFC
RECOMMENDED DIMENSION

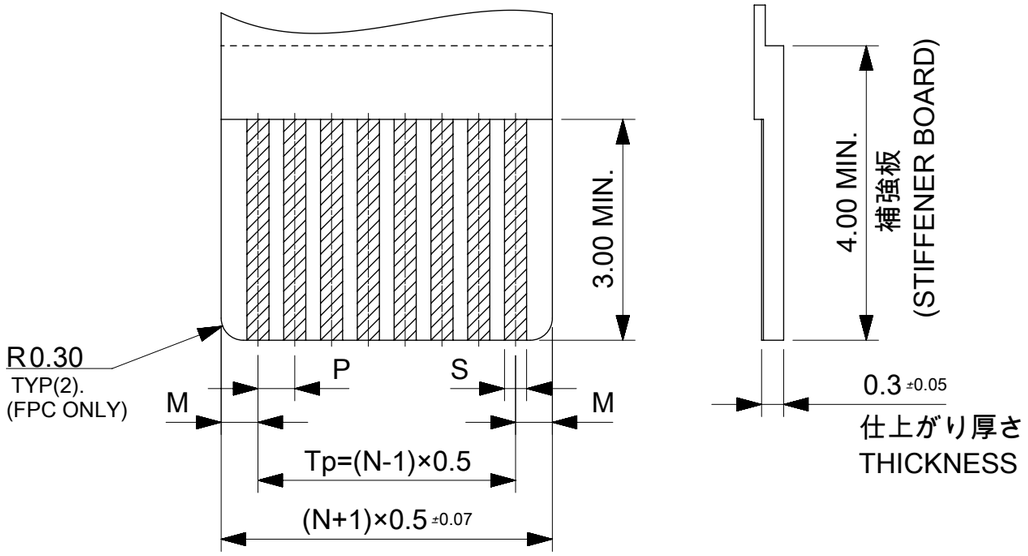


| | | |
|---|---|---|
| S | 0.30 $^{+0.05}_{-0.02}$ | 0.35 $^{+0.05}_{-0}$ |
| P | 0.50±0.05 | 0.50±0.05 |
| M | 0.50±0.08 | 0.50±0.10 |
| Tp | Tp±0.05 | Tp±0.05 |
| | FFC | FPC |

FPC/FFCについて
打抜き方向は導体側から補強版側を推奨します。
導体部については軟箔銅35μmまたは、50μmを推奨いたします。
接着剤の接点部への付着は導通不良の原因になりますので、染み出し無きことを推奨いたします。
FPC/FFCに規定された定格温度が、FPC/FFC単体前提である場合が御座います。
コネクタと組み合わせての実使用において、接着層が劣化する等の信頼性を満足できないケースを回避する為、実機での評価 / 確認をお願い致します。
ABOUT FPC/FFC
RECOMMENDED PUNCHING DIRECTION:FROM CONDUCTOR SIDE TO STIFFENER SIDE.
RECOMMENDED CONDUCTOR SPEC:SOFT COPPER FOIL.
RECOMMENDED CONDUCTOR THICKNESS:35 MICROMETER OR 50 MICROMETER.
RECOMMENDED PUT APPROPRIATE AMOUNT OF ADHESIVE ON ADHEREND BECAUSE THERE IS A POSSIBILITY THAT EXTRA ADHESIVE CAUSES THE DEFECT IN ELECTRICAL CONTINUITY.
THE HEAT RESISTANCE OF FPC/FFC IS ONLY FPC/FFC SPEC.
TO PREVENT THE CASE THAT RELIABILITY CANNOT BE SATISFIED (THE ADHESIVE IS DETERIORATED etc,)PLEASE DO THE EVALUATION AND THE CONFIRMATION WITH ACTUAL CONNECTOR.
FPCについて
補強フィルム材は、ポリイミドを推奨します。ベースフィルムは25μmを推奨します。
接着剤は熱硬化接着剤を推奨します。
ABOUT FPC
RECOMMENDED STIFFENER MATERIAL:POLYIMIDE.
RECOMMENDED BASE FILM THICKNESS:25 MICROMETER.
RECOMMENDED ADHESIVE:THERMOSETTING ADHESIVE.

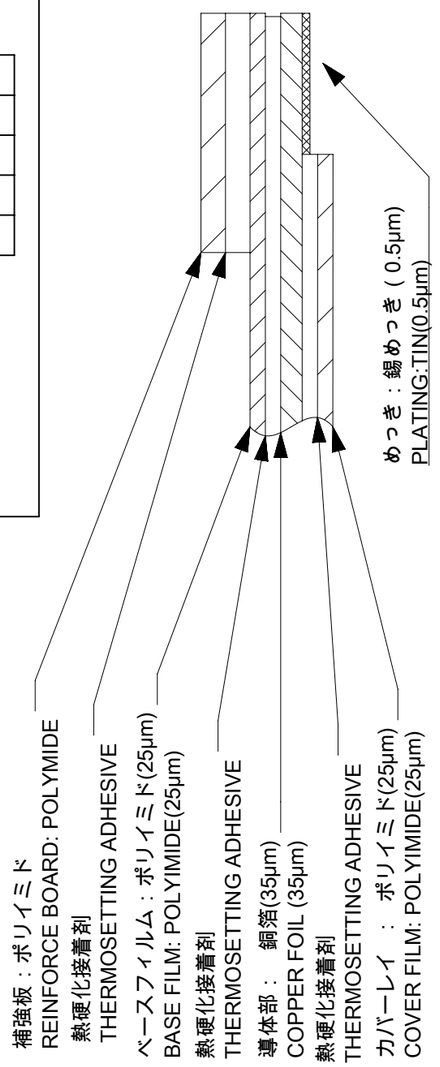


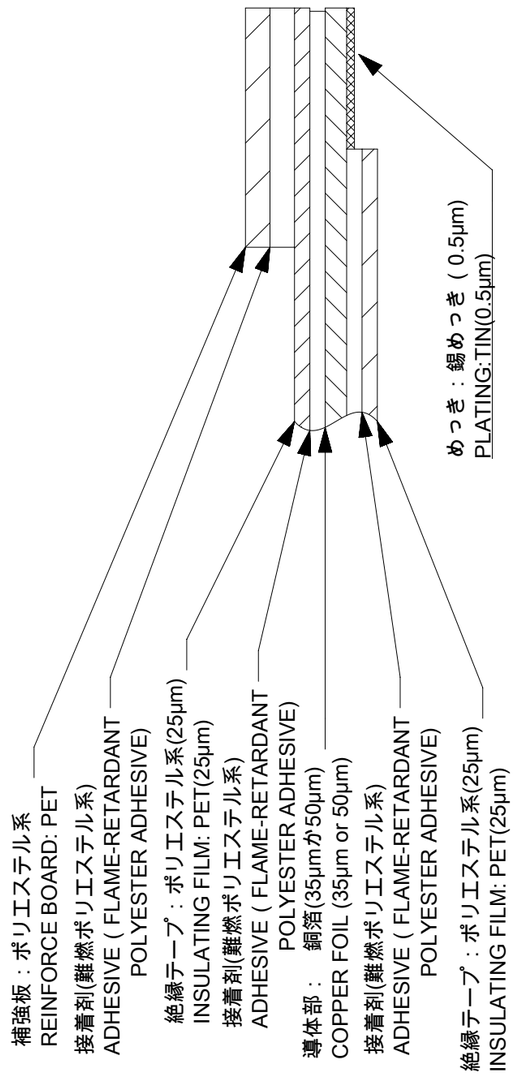


FPC構成推奨仕様
STRUCTURE OF FPC

FFC構成推奨仕様
STRUCTURE OF FFC

THIS DRAWING CONTAINS INFORMATION THAT IS PROPRIETARY TO MOLEX ELECTRONIC TECHNOLOGIES, LLC AND SHOULD NOT BE USED WITHOUT WRITTEN PERMISSION

EC NO: 107065 2016/01/25
DRWN: NASANUMA 2016/08/01
CHK'D: YKOBAYASHI02 2016/08/02
APPR: KMORIKAWA

GENERAL TOLERANCES (UNLESS SPECIFIED)
ANGULAR TOL ± 1.0 °

| | |
|---|---|
| 4 PLACES | ± 0.1 |
| 3 PLACES | ± 0.1 |
| 2 PLACES | ± 0.1 |
| 1 PLACE | ± 0.1 |
| 0 PLACES | ± 0.1 |

DRAFT WHERE APPLICABLE MUST REMAIN WITHIN DIMENSIONS

REV: A

DIMENSION UNITS: MM
SCALE: 12:1
DRWN BY: NASANUMA DATE: 2016/01/25
CHK'D BY: YKOBAYASHI02 DATE: 2016/08/01
APPR BY: KMORIKAWA DATE: 2016/08/02
DRAWING SIZE: A3
THIRD ANGLE PROJECTION

molex

0.5 PITCH NON-ZIF CONN. SMT ST ASSY

PRODUCT CUSTOMER DRAWING

| SERIES | MATERIAL NUMBER | CUSTOMER |
|---|---|---|
| 78119 | | |

| DOCUMENT NUMBER | DOC TYPE | DOC PART | SHEET NUMBER |
|---|---|---|---|
| 781191001 | PSD | 000 | 2 OF 3 |

| RELEASE STATUS | P1 | RELEASE DATE | 02.08.2016 00:40:28 |
|---|---|---|---|

FORMAT: master-lb-prod-A3
REVISION: F
DATE: 2015/11/16

ELV & RoHS COMPLIANT

| | | | | | | |
|---|---|---|---|---|---|---|
| 17 | 17 | 18.6 | 17.5 | 19.6 | 781193610 | 36 |
| 16 | 17 | 18.1 | 17 | 19.1 | 781193510 | 35 |
| 16 | 16 | 17.6 | 16.5 | 18.6 | 781193410 | 34 |
| 15 | 16 | 17.1 | 16 | 18.1 | 781193310 | 33 |
| 15 | 15 | 16.6 | 15.5 | 17.6 | 781193210 | 32 |
| 14 | 15 | 16.1 | 15 | 17.1 | 781193110 | 31 |
| 14 | 14 | 15.6 | 14.5 | 16.6 | 781193010 | 30 |
| 13 | 14 | 15.1 | 14 | 16.1 | 781192910 | 29 |
| 13 | 13 | 14.6 | 13.5 | 15.6 | 781192810 | 28 |
| 12 | 13 | 14.1 | 13 | 15.1 | 781192710 | 27 |
| 12 | 12 | 13.6 | 12.5 | 14.6 | 781192610 | 26 |
| 11 | 12 | 13.1 | 12 | 14.1 | 781192510 | 25 |
| 11 | 11 | 12.6 | 11.5 | 13.6 | 781192410 | 24 |
| 10 | 11 | 12.1 | 11 | 13.1 | 781192310 | 23 |
| 10 | 10 | 11.6 | 10.5 | 12.6 | 781192210 | 22 |
| 9 | 10 | 11.1 | 10 | 12.1 | 781192110 | 21 |
| 9 | 9 | 10.6 | 9.5 | 11.6 | 781192010 | 20 |
| 8 | 9 | 10.1 | 9 | 11.1 | 781191910 | 19 |
| 8 | 8 | 9.6 | 8.5 | 10.6 | 781191810 | 18 |
| 7 | 8 | 9.1 | 8 | 10.1 | 781191710 | 17 |
| 7 | 7 | 8.6 | 7.5 | 9.6 | 781191610 | 16 |
| 6 | 7 | 8.1 | 7 | 9.1 | 781191510 | 15 |
| 6 | 6 | 7.6 | 6.5 | 8.6 | 781191410 | 14 |
| 5 | 6 | 7.1 | 6 | 8.1 | 781191310 | 13 |
| 5 | 5 | 6.6 | 5.5 | 7.6 | 781191210 | 12 |
| 4 | 5 | 6.1 | 5 | 7.1 | 781191110 | 11 |
| 4 | 4 | 5.6 | 4.5 | 6.6 | 781191010 | 10 |
| 3 | 4 | 5.1 | 4 | 6.1 | 781190910 | 9 |
| 3 | 3 | 4.6 | 3.5 | 5.6 | 781190810 | 8 |
| 2 | 3 | 4.1 | 3 | 5.1 | 781190710 | 7 |
| 2 | 2 | 3.6 | 2.5 | 4.6 | 781190610 | 6 |
| E | D | C | B | A | EMBOSSED PACKAGE<br>オーダー番号 ORDER NO. | CIRCUIT |

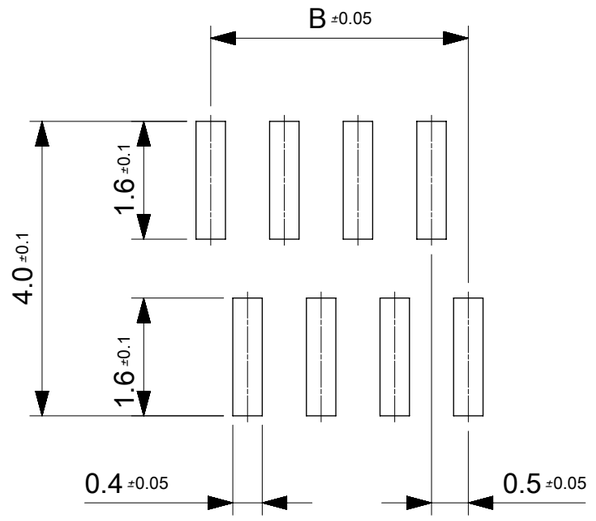


参考マスク厚:100μm
参考開口率:100%
REFERENCE SCREEN THICKNESS:100
REFERENCE SCREEN OPEN RATIO:100%

## 推奨基板レイアウト
RECOMMENDED PCB LAYOUT

CONNECTOR SERIES NO. 78119**15

THIS DRAWING CONTAINS INFORMATION THAT IS PROPRIETARY TO MOLEX ELECTRONIC TECHNOLOGIES, LLC AND SHOULD NOT BE USED WITHOUT WRITTEN PERMISSION

EC NO: 107065 2016/01/25
DRWN: NASANUMA 2016/08/01
CHK'D: YKOBAYASHI02 2016/08/02
APPR: KMORIKAWA 2016/08/02

GENERAL TOLERANCES (UNLESS SPECIFIED)
ANGULAR TOL ± 1.0 °

| | | |
|---|---|---|
| 4 PLACES | ± | 0.1 |
| 3 PLACES | ± | 0.1 |
| 2 PLACES | ± | 0.1 |
| 1 PLACE | ± | 0.1 |
| 0 PLACES | ± | 0.1 |

DRAFT WHERE APPLICABLE MUST REMAIN WITHIN DIMENSIONS

REV: A

DIMENSION UNITS: MM
SCALE: 12:1
DRWN BY: NASANUMA DATE: 2016/01/25
CHK'D BY: YKOBAYASHI02 DATE: 2016/08/01
APPR BY: KMORIKAWA DATE: 2016/08/02
DRAWING SIZE: A3
THIRD ANGLE PROJECTION

molex

0.5 PITCH NON-ZIF CONN. SMT ST ASSY

PRODUCT CUSTOMER DRAWING

| SERIES | MATERIAL NUMBER | CUSTOMER |
|---|---|---|
| 78119 | | |

| DOCUMENT NUMBER | DOC TYPE | DOC PART | SHEET NUMBER |
|---|---|---|---|
| 781191001 | PSD | 000 | 3 OF 3 |

| RELEASE STATUS | P1 | RELEASE DATE | 02.08.2016 00:40:28 |
|---|---|---|---|

FORMAT: master-tb-prod-A3
REVISION: F
DATE: 2015/11/16