引き出し方向

PULL OUT DIRECTION

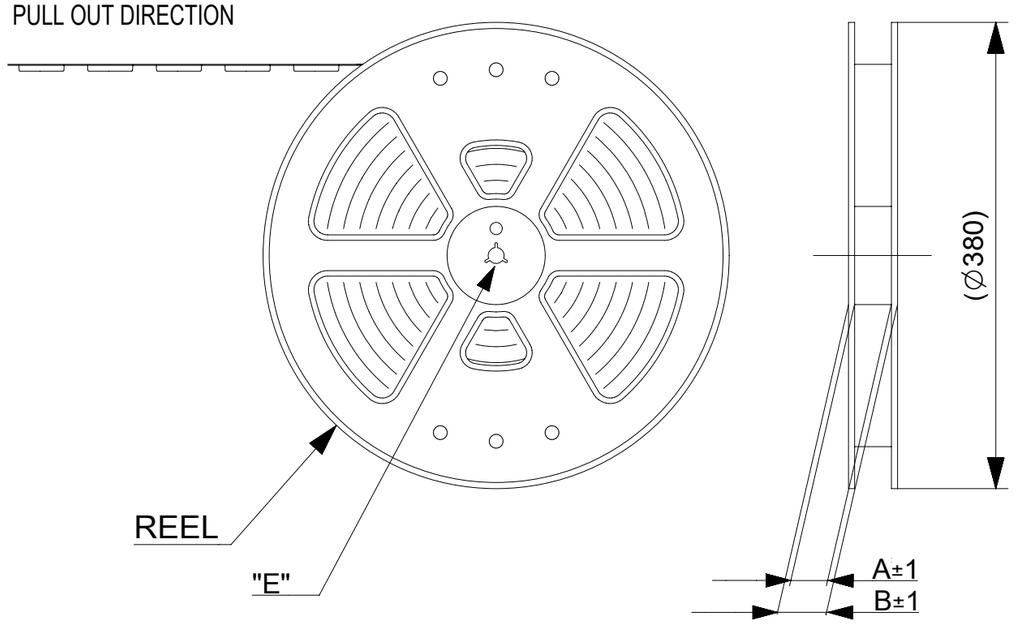

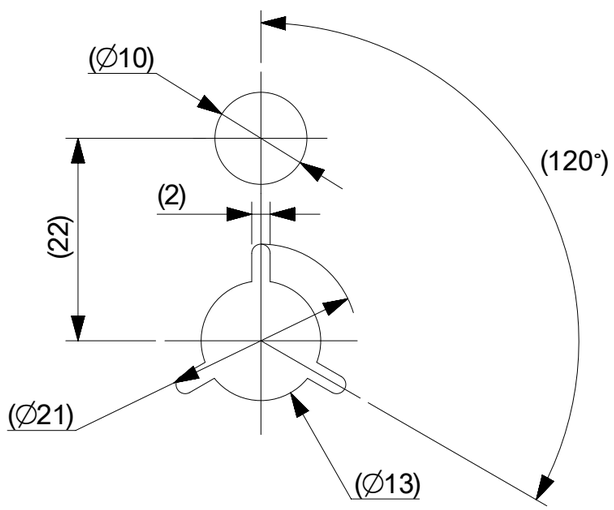

DETAIL "E"

NOTES

ELV&RoHS COMPLINT

1. 梱包数量： 2000個 / リール
   NUMBER OF CONNECTORS : 2000 PCS/REEL
2. リードテープ長さ
   LEAD TAPE LENGTH

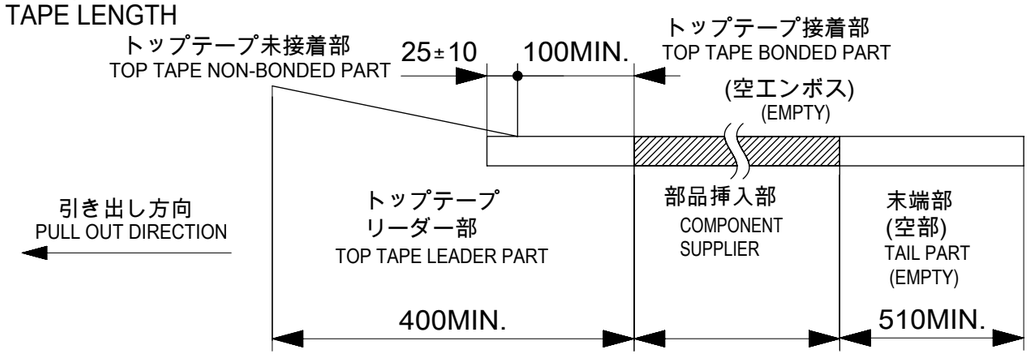

3. トップテープの剥離強度については、IEC60286-3に準拠。
   TOP TAPE PEEL FORCE IS DEFINED BY IEC60286-3.
4. 製品詳細寸法については、図面781191002をご参照ください。
   REFER TO THE 781191002 ABOUT DIMENSIONS IN DETAIL.
5. 材料
   キャリアテープ：ポリスチレン(PS)
   トップテープ　：PET,OTHER
   リール　　：ポリスチレン(PS)(リサイクル材を含む)
   MATERIAL
   CARRIER TAPE : POLYSTYRENE(PS)
   TOP TAPE : PET,OTHER
   REEL : POLYSTYRENE(PS) (RECYCLE MATERIAL CONTAINED)
6. 環境負荷物質の管理のため「化学物質ガイドライン」の内容を満足すること。
   "CHEMICAL SUBSTANCES GUIDELINE" SHALL BE APPLIED FOR MANAGEMENT OF ENVIRONMENTAL HAZARDOUS MATERIALS.

CONNECTOR SERIES NO. 78119**25

THIS DRAWING CONTAINS INFORMATION THAT IS PROPRIETARY TO MOLEX ELECTRONIC TECHNOLOGIES, LLC AND SHOULD NOT BE USED WITHOUT WRITTEN PERMISSION

DIMENSION UNITS	SCALE
mm	~~2:1~~

GENERAL TOLERANCES (UNLESS SPECIFIED)		
ANGULAR TOL	±	1.0 °
4 PLACES	±	0.1
3 PLACES	±	0.1
2 PLACES	±	0.1
1 PLACE	±	0.1
0 PLACES	±	0.1

DRAFT WHERE APPLICABLE MUST REMAIN WITHIN DIMENSIONS

CURRENT REV DESC:

EC NO: 677105
DRWN: NARENC 2021/09/07
CHK'D: TKON 2021/09/13
APPR: SHOSHIKAWA 2021/09/16

INITIAL REVISION:
DRWN: NASANUMA 2016/04/26
APPR: KMORIKAWA 2016/08/02

molex

0.5 FPC CONN. N-ZIF ST AU EMBS TP PKG

PRODUCT CUSTOMER DRAWING

DOCUMENT NUMBER	DOC TYPE	DOC PART	REVISION
781190002	PSD	000	B

THIRD ANGLE PROJECTION	DRAWING	SERIES	MATERIAL NUMBER	CUSTOMER	SHEET NUMBER
	A3-SIZE	78119	SEE TABLE		1 OF 3

DOCUMENT STATUS	P1	RELEASE DATE	2021/09/16 03:08:11

FORMAT: master-lb-prod-A3
REVISION: J
DATE: 2020/01/14

ELV&RoHS COMPLINT

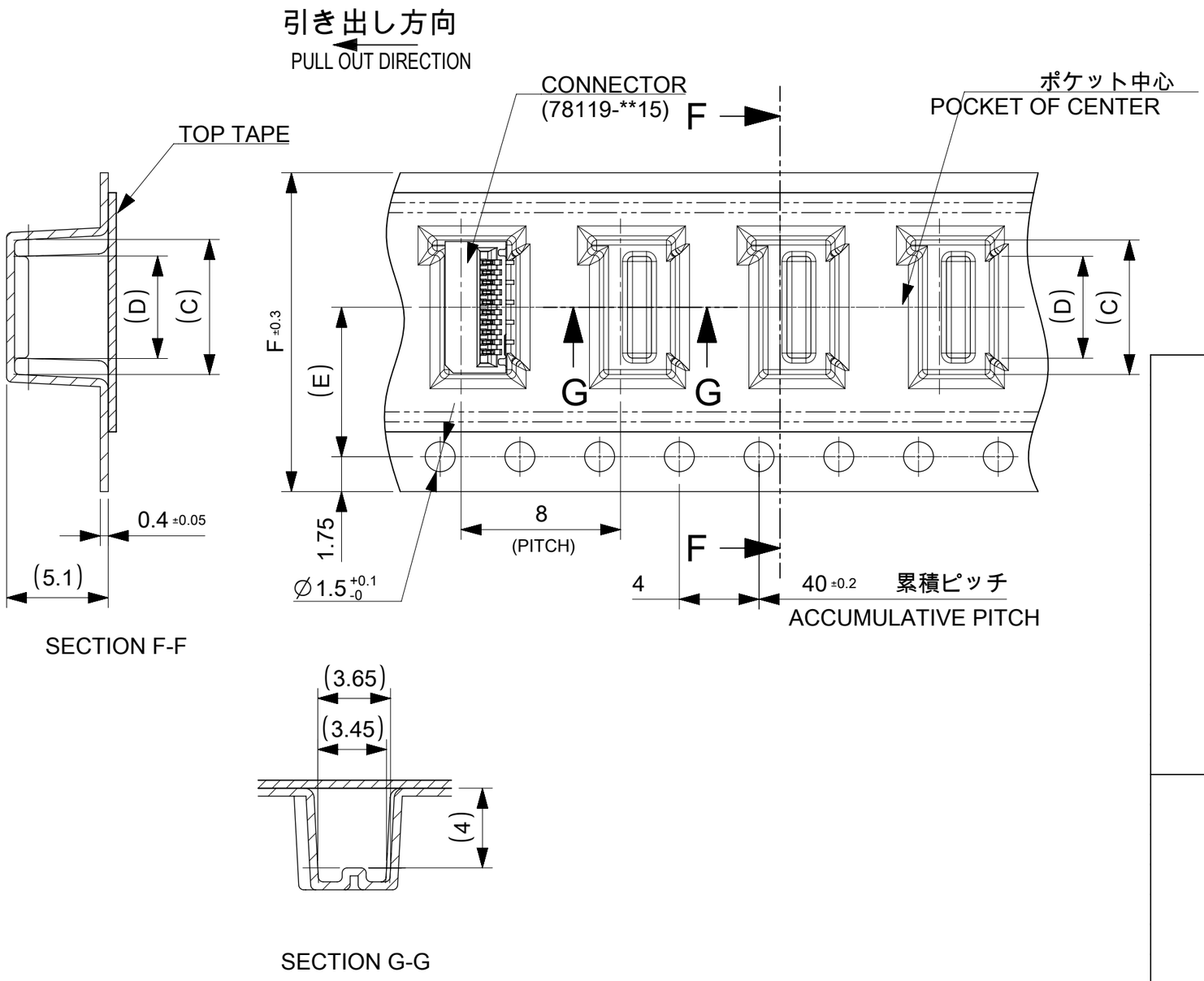

F TAPE WIDTH	E	D	C	B	A	EMBOSSED PACKAGE オーダー番号 ORDER NO	CIRCUIT
24	11.5	14.1	15.8	29.4	25.4	781192820	28
		13.6	15.3			781192720	27
		13.1	14.8			781192620	26
		12.6	14.3			781192520	25
		12.1	13.8			781192420	24
		11.6	13.3			781192320	23
		11.1	12.8			781192220	22
		10.6	12.3			781192120	21
		10.1	11.8			781192020	20
		9.6	11.3			781191920	19
		9.1	10.8			781191820	18
		8.6	10.3			781191720	17
		8.1	9.8			781191620	16
		7.6	9.3			781191520	15
16	7.5	7.1	8.8	21.4	17.4	781191420	14
		6.6	8.3			781191320	13
		6.1	7.8			781191220	12
		5.6	7.3			781191120	11
		5.1	6.8			781191020	10
		4.6	6.3			781190920	9
		4.1	5.8			781190820	8
		3.6	5.3			781190720	7
		3.1	4.8			781190620	6

16mm, 24mm幅キャリアテープ

16mm, 24mm WIDTH CARIER TAPE

CONNECTOR SERIES NO. 78119**25

THIS DRAWING CONTAINS INFORMATION THAT IS PROPRIETARY TO MOLEX ELECTRONIC TECHNOLOGIES, LLC AND SHOULD NOT BE USED WITHOUT WRITTEN PERMISSION

DIMENSION UNITS	SCALE
mm	4:1

GENERAL TOLERANCES (UNLESS SPECIFIED)

ANGULAR TOL	±	1.0 °
4 PLACES	±	0.1
3 PLACES	±	0.1
2 PLACES	±	0.1
1 PLACE	±	0.1
0 PLACES	±	0.1

DRAFT WHERE APPLICABLE MUST REMAIN WITHIN DIMENSIONS

CURRENT REV DESC:

EC NO: 677105
DRWN: NARENC 2021/09/07
CHK'D: TKON 2021/09/13
APPR: SHOSHIKAWA 2021/09/16

INITIAL REVISION:
DRWN: NASANUMA 2016/04/26
APPR: KMORIKAWA 2016/08/02

molex

0.5 FPC CONN. N-ZIF ST AU EMBS TP PKG

PRODUCT CUSTOMER DRAWING

DOCUMENT NUMBER	DOC TYPE	DOC PART	REVISION
781190002	PSD	000	B

THIRD ANGLE PROJECTION	DRAWING	SERIES	MATERIAL NUMBER	CUSTOMER	SHEET NUMBER
	A3-SIZE	78119	SEE TABLE		2 OF 3

DOCUMENT STATUS	P1	RELEASE DATE	2021/09/16 03:08:11

FORMAT: master-lb-prod-A3
REVISION: J
DATE: 2020/01/14

ELV&RoHS COMPLINT

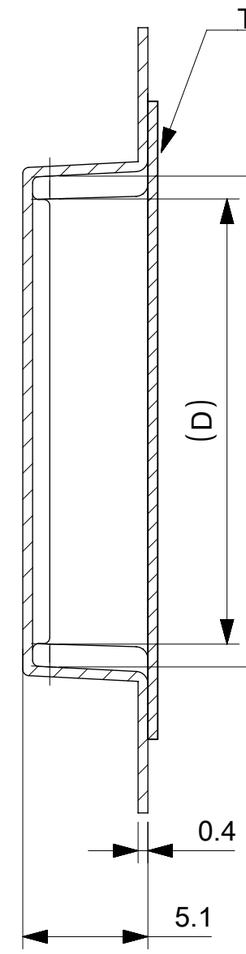

SECTION C-C

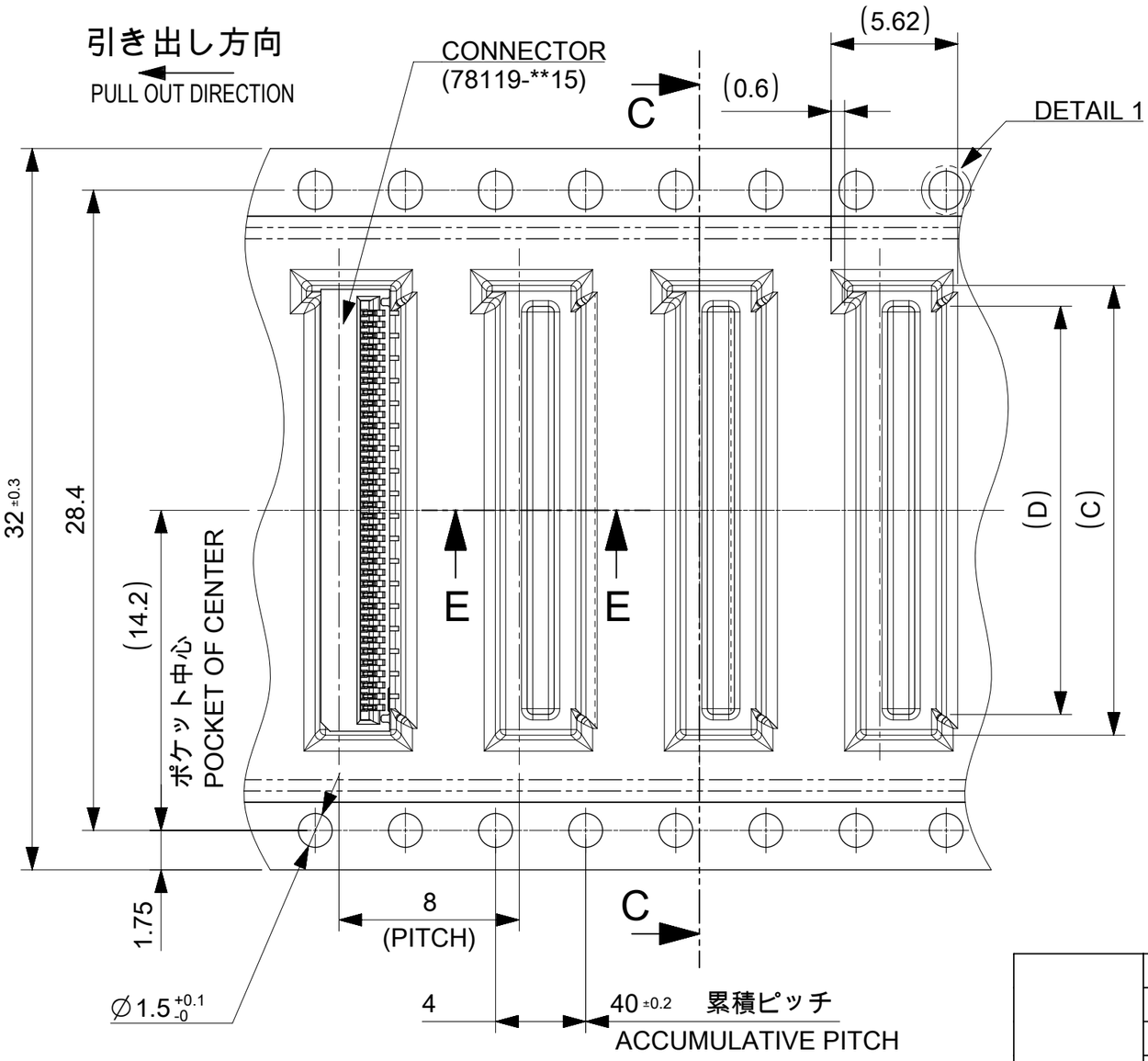

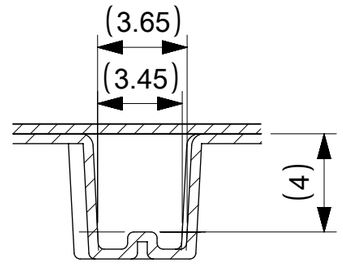

SECTION E-E

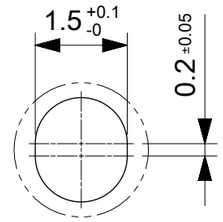

DETAIL 1
SCALE 10:1

32	18.1	19.8	37.4	33.4	781193620	36
	17.6	19.3			781193520	35
	17.1	18.8			781193420	34
	16.6	18.3			781193320	33
	16.1	17.8			781193220	32
	15.6	17.3			781193120	31
	15.1	16.8			781193020	30
	14.6	16.3			781192920	29
TAPE WIDTH	D	C	B	A	EMBOSSED PACKAGE オーダー番号 ORDER NO	CIRCUIT

32mm幅キャリアテープ
32mm WIDTH CARRIER TAPE

CONNECTOR SERIES NO. 78119**25

THIS DRAWING CONTAINS INFORMATION THAT IS PROPRIETARY TO MOLEX ELECTRONIC TECHNOLOGIES, LLC AND SHOULD NOT BE USED WITHOUT WRITTEN PERMISSION

DIMENSION UNITS	mm
SCALE	4:1
GENERAL TOLERANCES (UNLESS SPECIFIED)	
ANGULAR TOL	± 1.0 °
4 PLACES	± 0.1
3 PLACES	± 0.1
2 PLACES	± 0.1
1 PLACE	± 0.1
0 PLACES	± 0.1
DRAFT WHERE APPLICABLE MUST REMAIN WITHIN DIMENSIONS	

CURRENT REV DESC:

EC NO: 677105
DRWN: NARENC 2021/09/07
CHK'D: TKON 2021/09/13
APPR: SHOSHIKAWA 2021/09/16

INITIAL REVISION:
DRWN: NASANUMA 2016/04/26
APPR: KMORIKAWA 2016/08/02

THIRD ANGLE PROJECTION | DRAWING: A3-SIZE | SERIES: 78119

molex

0.5 FPC CONN. N-ZIF ST AU EMBS TP PKG

PRODUCT CUSTOMER DRAWING

DOCUMENT NUMBER	DOC TYPE	DOC PART	REVISION
781190002	PSD	000	B

MATERIAL NUMBER	CUSTOMER	SHEET NUMBER
SEE TABLE		3 OF 3

DOCUMENT STATUS	P1	RELEASE DATE	2021/09/16 03:08:11

FORMAT: master-tb-prod-A3
REVISION: J
DATE: 2020/01/14

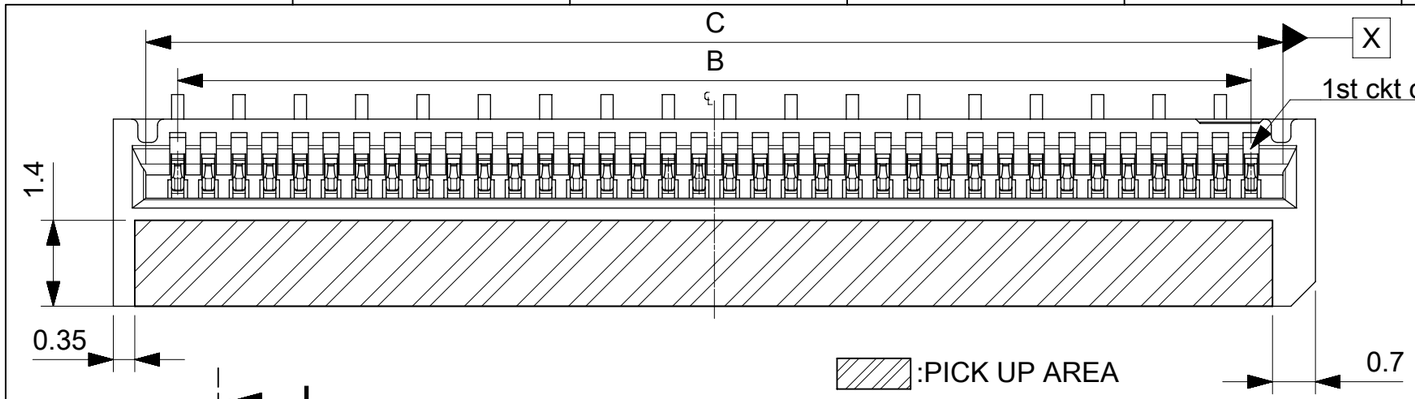

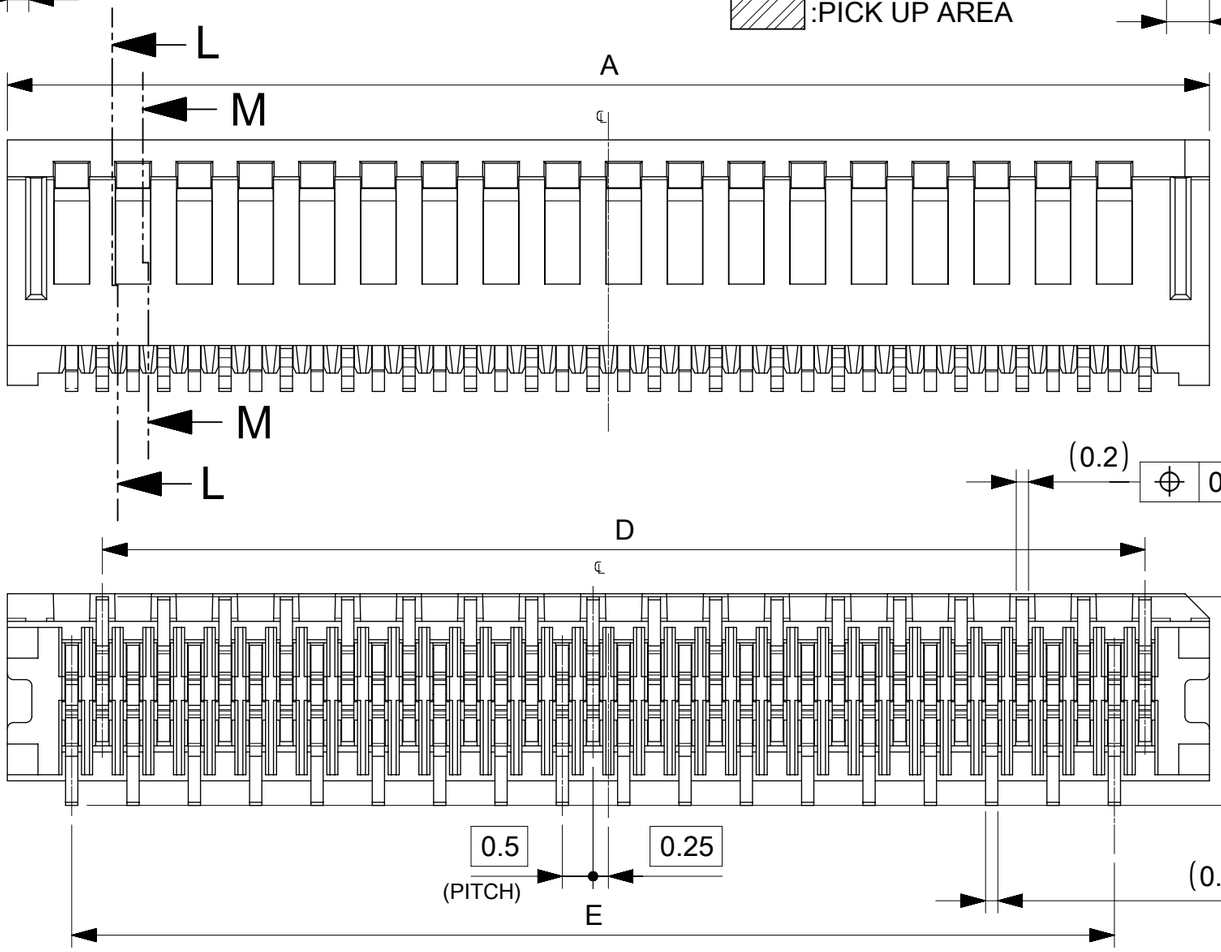

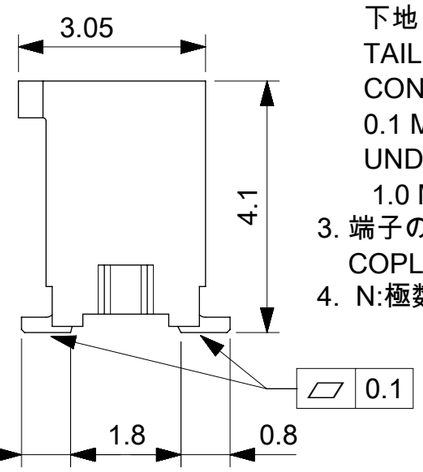

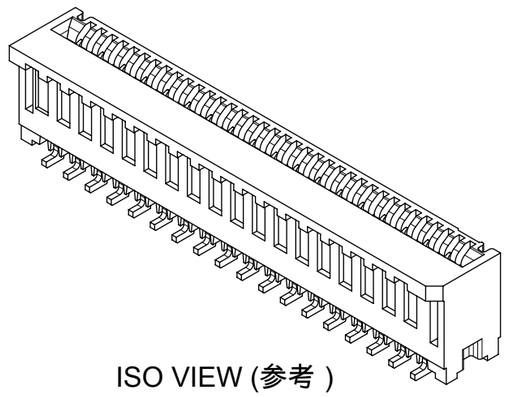

ISO VIEW (参考)

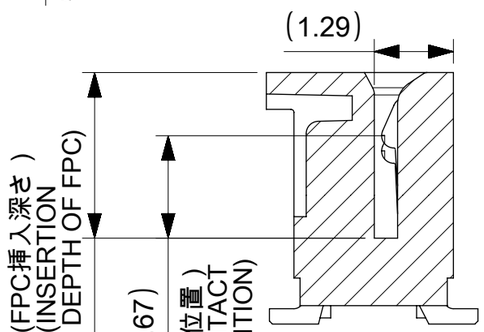

SECTION M-M

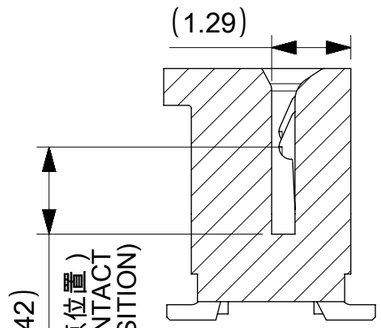

SECTION L-L

NOTES

ELV&RoHS COMPLIANT

1. 使用材料 MATERIALS
   ハウジング　：液晶ポリマー (LCP)
   ガラス充填、UL94 V-0、黒色
   端子　：リン青銅　t=0.2mm
   HOUSING　:LIQUID QLYSTAL POLYMER(LCP)
   GLASS FILLED, UL94 V-0, BLACK
   TERMINAL:PHOSPHOR BRONZE t=0.2mm
2. メッキ仕様 PLATING
   端子 TERMINAL
   テール部：金メッキ
   接点部：金メッキ 0.1μm以上
   下地：ニッケルメッキ 1.0μm以上
   TAIL AREA：GOLD PLATING
   CONTACT AREA： GOLD PLATING
   0.1 MICROMETER MINIMUM
   UNDER PLATING:Nickel PLATING
   1.0 MICROMETER MINIMUM
3. 端子の平坦度はテール部にて0.1mm以下とする。
   COPLANALITY OF SOLDER TAILS:0.1mmMAX.
4. N:極数　N:CIRCUIT

CONNECTOR SERIES NO. 78119**25

THIS DRAWING CONTAINS INFORMATION THAT IS PROPRIETARY TO MOLEX ELECTRONIC TECHNOLOGIES, LLC AND SHOULD NOT BE USED WITHOUT WRITTEN PERMISSION

EC NO:	107065	2016/02/17	
DRWN:	NASANUMA	2016/08/01	
CHK'D:	YKOBAYASHI02	2016/08/02	
APPR:	KMORIKAWA		
REV	A		

GENERAL TOLERANCES (UNLESS SPECIFIED)

ANGULAR TOL	±	1.0 °
4 PLACES	±	0.1
3 PLACES	±	0.1
2 PLACES	±	0.1
1 PLACE	±	0.1
0 PLACES	±	0.1

DRAFT WHERE APPLICABLE MUST REMAIN WITHIN DIMENSIONS

DIMENSION UNITS	MM
SCALE	10:1
DRWN BY	NASANUMA
DATE	2016/02/17
CHK'D BY	YKOBAYASHI02
DATE	2016/08/01
APPR BY	KMORIKAWA
DATE	2016/08/02
DRAWING SIZE	A3
THIRD ANGLE PROJECTION	

molex

0.5 PITCH NON-ZIF CONN. SMT AU ST ASSY

PRODUCT CUSTOMER DRAWING

SERIES	MATERIAL NUMBER	CUSTOMER
78119		

DOCUMENT NUMBER	DOC TYPE	DOC PART	SHEET NUMBER
781191002	PSD	000	1 OF 3

RELEASE STATUS	P1	RELEASE DATE	02.08.2016 00:40:30

FORMAT: master-lb-prod-A3
REVISION: F
DATE: 2015/11/16

ELV & RoHS COMPLIANT

適合FPC/FFC推奨寸法
APPLICABLE FPC/FFC
RECOMMENDED DIMENSION

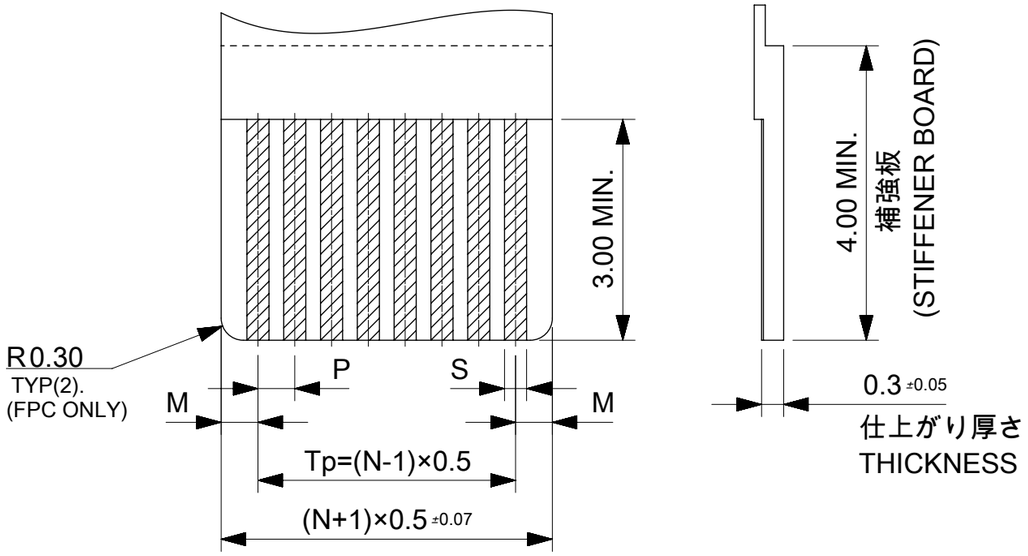

S	0.30 +0.05 -0.02	0.35 +0.04 -0.03
P	0.50±0.03	0.50±0.02
M	0.50±0.10	0.50±0.12
Tp	Tp±0.03	Tp±0.03
	FFC	FPC

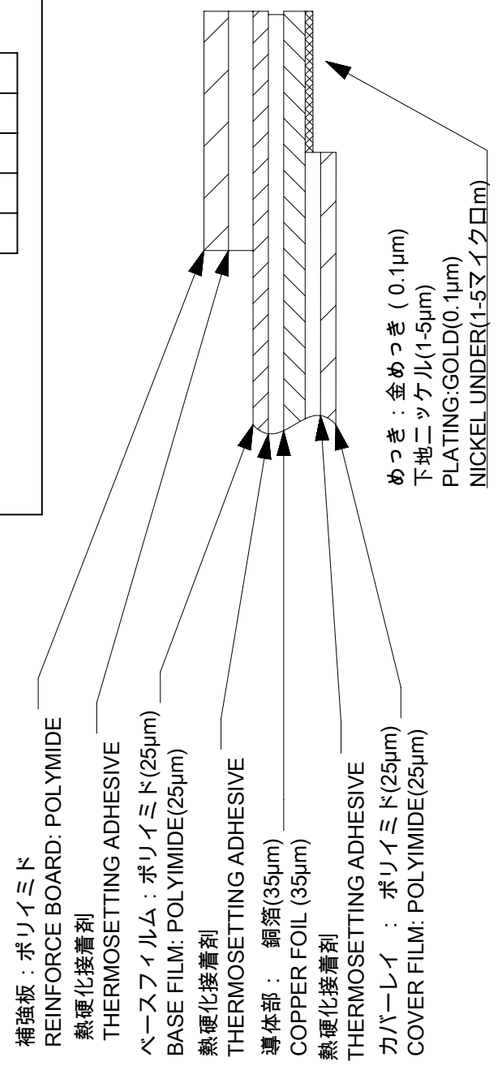

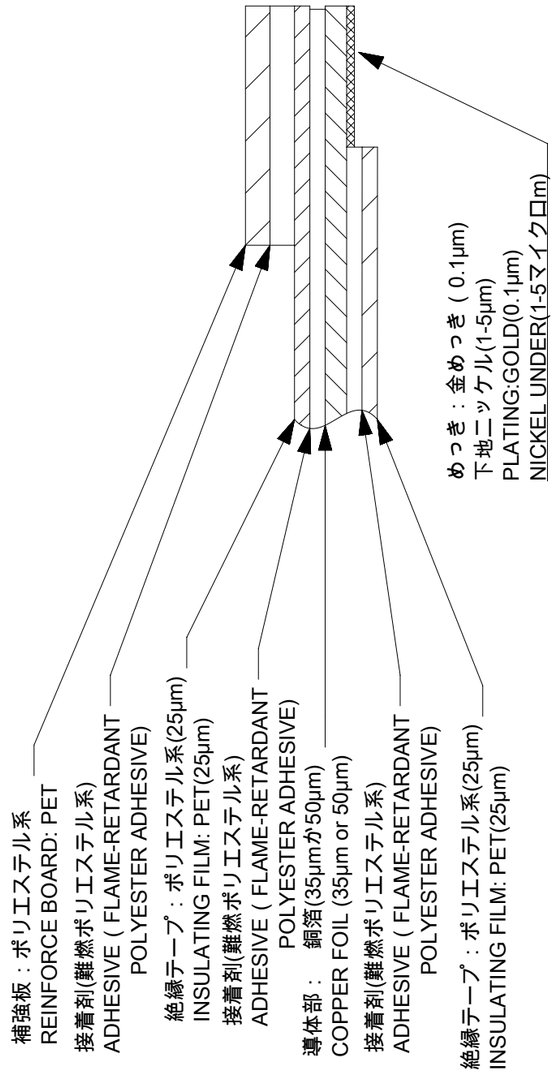

FPC/FFCについて
打抜き方向は導体側から補強版側を推奨します。
導体部については軟箔銅35μmまたは、50μmを推奨いたします。
接着剤の接点部への付着は導通不良の原因になりますので、染み出し無きことを推奨いたします。
FPC/FFCに規定された定格温度が、FPC/FFC単体前提である場合が御座います。
コネクタと組み合わせての実使用において、接着層が劣化する等の信頼性を満足できないケースを回避する為、実機での評価 / 確認をお願い致します。
ABOUT FPC/FFC
RECOMMENDED PUNCHING DIRECTION:FROM CONDUCTOR SIDE TO STIFFENER SIDE.
RECOMMENDED CONDUCTOR SPEC:SOFT COPPER FOIL.
RECOMMENDED CONDUCTOR THICKNESS:35 MICROMETER OR 50 MICROMETER.
RECOMMENDED PUT APPROPRIATE AMOUNT OF ADHESIVE ON ADHEREND BECAUSE THERE IS A POSSIBILITY THAT EXTRA ADHESIVE CAUSES THE DEFECT IN ELECTRICAL CONTINUITY.
THE HEAT RESISTANCE OF FPC/FFC IS ONLY FPC/FFC SPEC.
TO PREVENT THE CASE THAT RELIABILITY CANNOT BE SATISFIED (THE ADHESIVE IS DETERIORATED etc,)PLEASE DO THE EVALUATION AND THE CONFIRMATION WITH ACTUAL CONNECTOR.
FPCについて
補強フィルム材は、ポリイミドを推奨します。ベースフィルムは25μmを推奨します。
接着剤は熱硬化接着剤を推奨します。
ABOUT FPC
RECOMMENDED STIFFENER MATERIAL:POLYIMIDE.
RECOMMENDED BASE FILM THICKNESS:25 MICROMETER.
RECOMMENDED ADHESIVE:THERMOSETTING ADHESIVE.

FPC構成推奨仕様
STRUCTURE OF FPC

FFC構成推奨仕様
STRUCTURE OF FFC

THIS DRAWING CONTAINS INFORMATION THAT IS PROPRIETARY TO MOLEX ELECTRONIC TECHNOLOGIES, LLC AND SHOULD NOT BE USED WITHOUT WRITTEN PERMISSION

EC NO: 107065 2016/02/17
DRWN: NASANUMA 2016/08/01
CHK'D: YKOBAYASHI02 2016/08/02
APPR: KMORIKAWA

REV: A

GENERAL TOLERANCES (UNLESS SPECIFIED)
ANGULAR TOL ± 1.0 °
4 PLACES ± 0.1
3 PLACES ± 0.1
2 PLACES ± 0.1
1 PLACE ± 0.1
0 PLACES ± 0.1
DRAFT WHERE APPLICABLE MUST REMAIN WITHIN DIMENSIONS

DIMENSION UNITS: MM
SCALE: 12:1
DRWN BY: NASANUMA DATE: 2016/02/17
CHK'D BY: YKOBAYASHI02 DATE: 2016/08/01
APPR BY: KMORIKAWA DATE: 2016/08/02
DRAWING SIZE: A3
THIRD ANGLE PROJECTION

molex

0.5 PITCH NON-ZIF CONN. SMT AU ST ASSY

PRODUCT CUSTOMER DRAWING

SERIES	MATERIAL NUMBER	CUSTOMER
78119		

DOCUMENT NUMBER	DOC TYPE	DOC PART	SHEET NUMBER
781191002	PSD	000	2 OF 3

RELEASE STATUS	P1	RELEASE DATE	02.08.2016 00:40:30

FORMAT: master-lb-prod-A3
REVISION: F
DATE: 2015/11/16

ELV & RoHS COMPLIANT

17	17	18.6	17.5	19.6	781193620	36
16	17	18.1	17	19.1	781193520	35
16	16	17.6	16.5	18.6	781193420	34
15	16	17.1	16	18.1	781193320	33
15	15	16.6	15.5	17.6	781193220	32
14	15	16.1	15	17.1	781193120	31
14	14	15.6	14.5	16.6	781193020	30
13	14	15.1	14	16.1	781192920	29
13	13	14.6	13.5	15.6	781192820	28
12	13	14.1	13	15.1	781192720	27
12	12	13.6	12.5	14.6	781192620	26
11	12	13.1	12	14.1	781192520	25
11	11	12.6	11.5	13.6	781192420	24
10	11	12.1	11	13.1	781192320	23
10	10	11.6	10.5	12.6	781192220	22
9	10	11.1	10	12.1	781192120	21
9	9	10.6	9.5	11.6	781192020	20
8	9	10.1	9	11.1	781191920	19
8	8	9.6	8.5	10.6	781191820	18
7	8	9.1	8	10.1	781191720	17
7	7	8.6	7.5	9.6	781191620	16
6	7	8.1	7	9.1	781191520	15
6	6	7.6	6.5	8.6	781191420	14
5	6	7.1	6	8.1	781191320	13
5	5	6.6	5.5	7.6	781191220	12
4	5	6.1	5	7.1	781191120	11
4	4	5.6	4.5	6.6	781191020	10
3	4	5.1	4	6.1	781190920	9
3	3	4.6	3.5	5.6	781190820	8
2	3	4.1	3	5.1	781190720	7
2	2	3.6	2.5	4.6	781190620	6
E	D	C	B	A	EMBOSSED PACKAGE オーダー番号 ORDER NO.	CIRCUIT

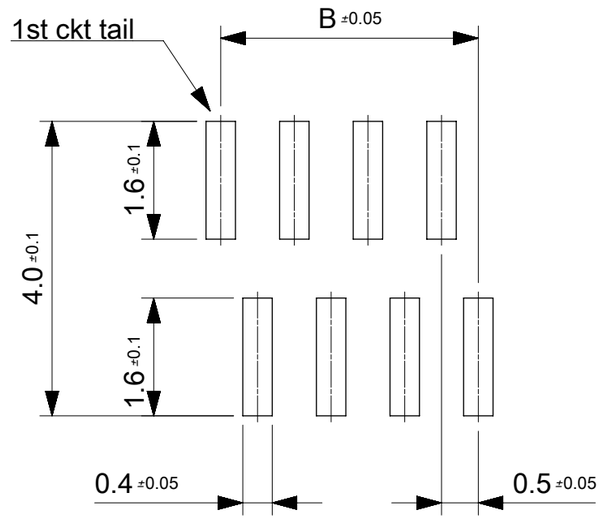

参考マスク厚:100μm
参考開口率:100%
REFERENCE SCREEN THICKNESS:100
REFERENCE SCREEN OPEN RATIO:100%

推奨基板レイアウト
RECOMMENDED PCB LAYOUT

CONNECTOR SERIES NO. 78119**25

THIS DRAWING CONTAINS INFORMATION THAT IS PROPRIETARY TO MOLEX ELECTRONIC TECHNOLOGIES, LLC AND SHOULD NOT BE USED WITHOUT WRITTEN PERMISSION

EC NO: 107065 2016/02/17
DRWN: NASANUMA 2016/08/01
CHK'D: YKOBAYASHI02 2016/08/02
APPR: KMORIKAWA

GENERAL TOLERANCES (UNLESS SPECIFIED)
ANGULAR TOL ± 1.0 °
4 PLACES ± 0.1
3 PLACES ± 0.1
2 PLACES ± 0.1
1 PLACE ± 0.1
0 PLACES ± 0.1
DRAFT WHERE APPLICABLE MUST REMAIN WITHIN DIMENSIONS

REV: A

DIMENSION UNITS: MM
SCALE: 12:1
DRWN BY: NASANUMA DATE: 2016/02/17
CHK'D BY: YKOBAYASHI02 DATE: 2016/08/01
APPR BY: KMORIKAWA DATE: 2016/08/02
DRAWING SIZE: A3
THIRD ANGLE PROJECTION

molex

0.5 PITCH NON-ZIF CONN. SMT AU ST ASSY

PRODUCT CUSTOMER DRAWING

SERIES	MATERIAL NUMBER	CUSTOMER
78119		

DOCUMENT NUMBER	DOC TYPE	DOC PART	SHEET NUMBER
781191002	PSD	000	3 OF 3

RELEASE STATUS	P1	RELEASE DATE	02.08.2016 00:40:30

FORMAT: master-tb-prod-A3
REVISION: F
DATE: 2015/11/16