

DETAIL1

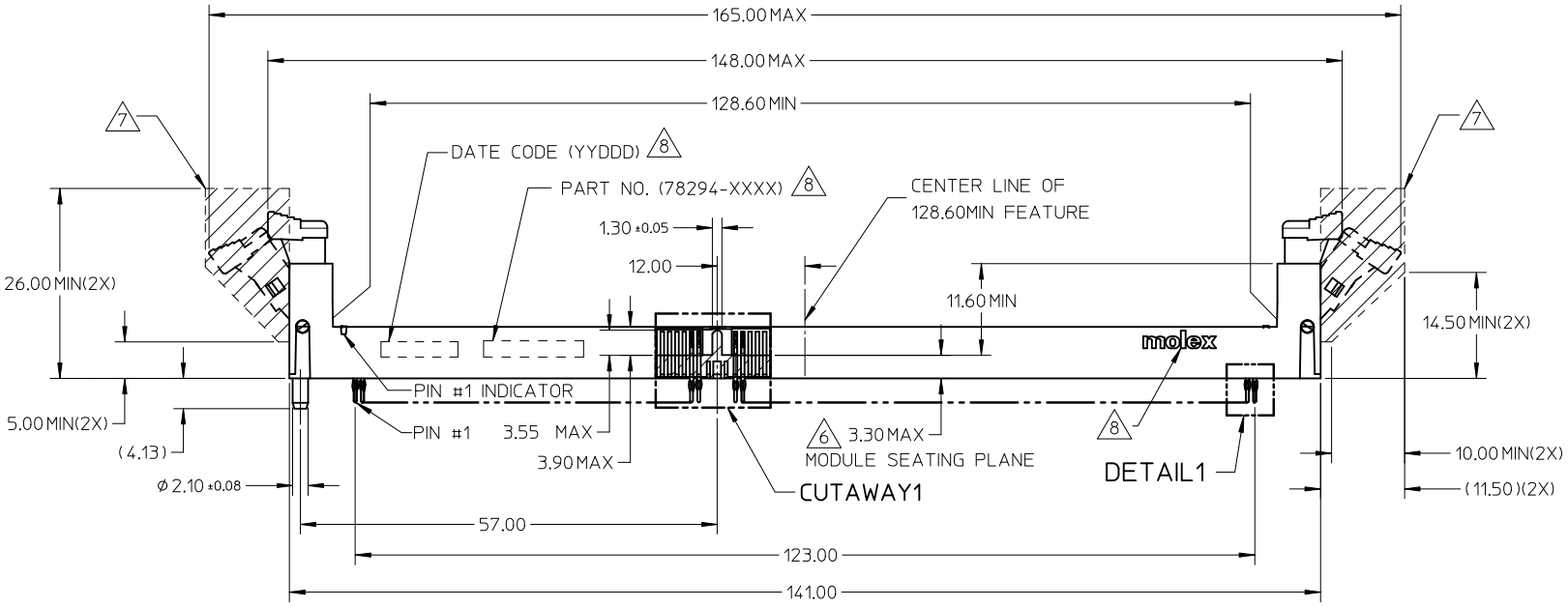

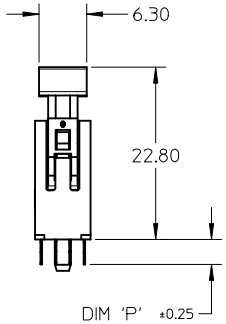

NOTES:

1. MATERIALS
   HOUSING - HIGH TEMP NYLON GLASS FILLED, UL 94V-0, COLOUR - SEE TABLE
   LATCH - HIGH TEMP NYLON, COLOUR: BLACK OR NATURAL - SEE TABLE
   - POLYSULFONE, UL 94HB - CLEAR
   TERMINAL - PHOSPHOR BRONZE
2. FINISHES - SEE TABLE.
3. PRODUCT SPECIFICATION: SEE TABLE.
4. PACKAGING SPECIFICATION: PRODUCT SHALL BE PACKED IN TRAY - SEE SHEET 6 .
5. CARD SLOT ACCEPTS 1.27±0.10MM MODULE THINKNESS. (MEASURED FROM P.C.PADS).

6 MODULE SEATING PLANE FROM TOP OF PCB.
7 KEEP OUT ZONE RESERVED FOR LATCH.
8 MOLEX LOGO, DATE & PART NO. INDICATED ON HOUSING.

REMOVE PART NO.
EC NO: S2012-0828 2012/04/30
DRWN:CGTAN 2012/05/11
CH'KD:CCTEH 2012/05/11
APPR:SHLENI
DESCRIPTION
REV

A5

QUALITY SYMBOLS
▼=0
Ⓒ=0

GENERAL TOLERANCES (UNLESS SPECIFIED)	mm	INCH
4 PLACES	± ---	± ---
3 PLACES	± ---	± ---
2 PLACES	± 0.2	± ---
1 PLACE	± ---	± ---
ANGULAR ± 1 °		

DRAFT WHERE APPLICABLE MUST REMAIN WITHIN DIMENSIONS

DIMENSION STYLE	SCALE	DESIGN UNITS
MM ONLY	NTS	METRIC

THIRD ANGLE PROJECTION

DRAWN BY	DATE
CMTEO	2007/08/29
CHECKED BY	DATE
CCTEH	2007/10/09
APPROVED BY	DATE
SHLENI	2007/10/10

TITLE: DDR3 DIMM, 1.00MM PITCH
240 CKTS
VERTICAL PRESS-FIT

molex MOLEX INCORPORATED

MATERIAL NO.: SEE TABLE

DOCUMENT NO.: SD-78294-001

SHEET NO.: 1 OF 7

SIZE A3

THIS DRAWING CONTAINS INFORMATION THAT IS PROPRIETARY TO MOLEX INCORPORATED AND SHOULD NOT BE USED WITHOUT WRITTEN PERMISSION

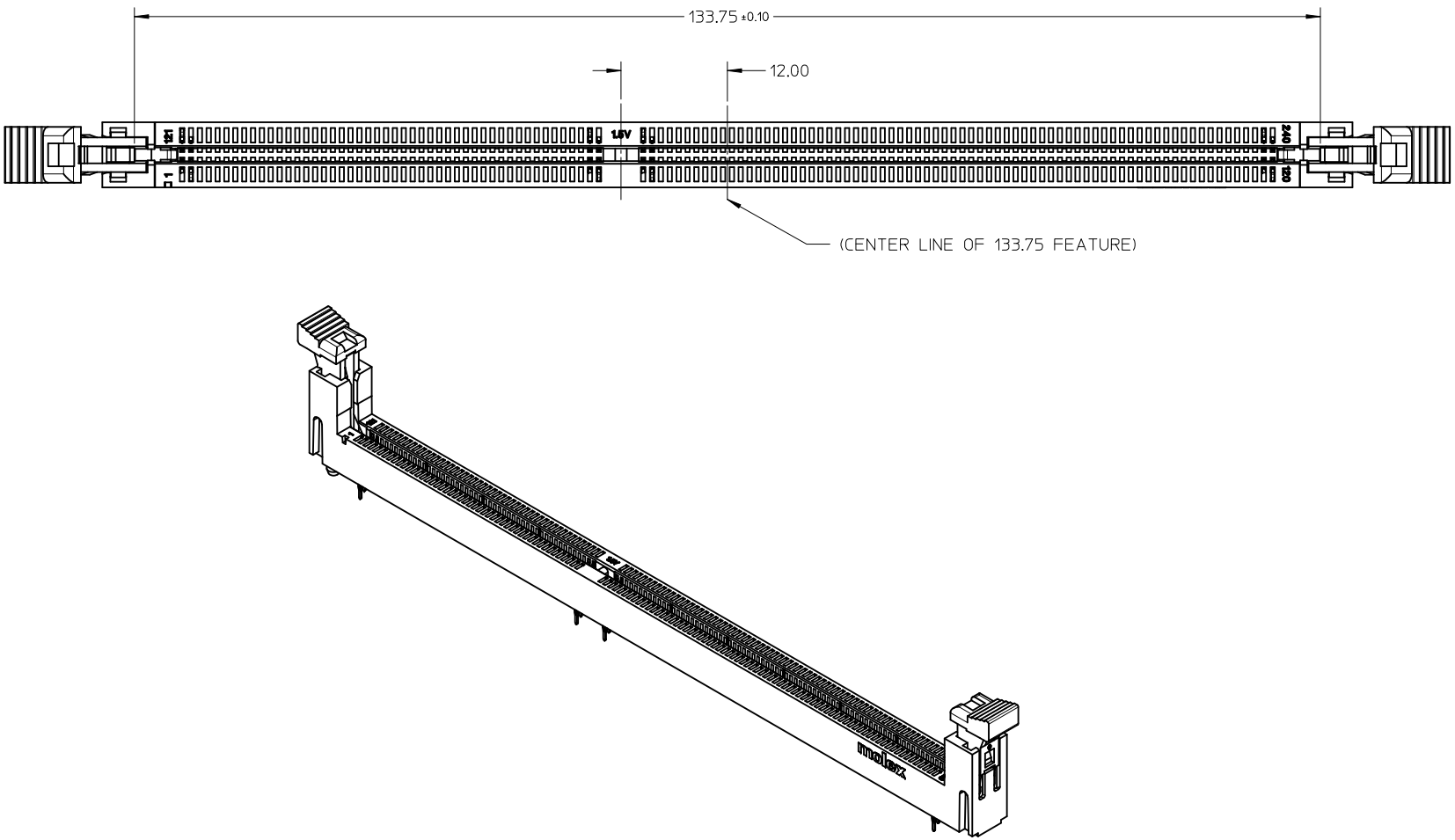

REMOVE PART NO. EC NO: S2012-0828 DRWN:CGTAN 2012/04/30 CH'KD:CCTEH 2012/05/11 APPR:SHLENI 2012/05/11	QUALITY SYMBOLS ▼=0 C=0	GENERAL TOLERANCES (UNLESS SPECIFIED)			DIMENSION STYLE MM ONLY	SCALE NTS	DESIGN UNITS METRIC	THIRD ANGLE PROJECTION
			mm	INCH	DRAWN BY CMTEO DATE 2007/08/29	TITLE DDR3 DIMM, 1.00MM PITCH 240 CKTS VERTICAL PRESS-FIT		
		4 PLACES	± ---	± ---	CHECKED BY CCTEH DATE 2007/10/09			
		3 PLACES	± ---	± ---				
		2 PLACES	± 0.2	± ---	APPROVED BY SHLENI DATE 2007/10/10	molex MOLEX INCORPORATED		
		1 PLACE	± ---	± ---				
		ANGULAR ± 1 °						
A5	REV DESCRIPTION	DRAFT WHERE APPLICABLE MUST REMAIN WITHIN DIMENSIONS			MATERIAL NO. SEE TABLE	DOCUMENT NO. SD-78294-001	SHEET NO. 2 OF 7	
					SIZE A3	THIS DRAWING CONTAINS INFORMATION THAT IS PROPRIETARY TO MOLEX INCORPORATED AND SHOULD NOT BE USED WITHOUT WRITTEN PERMISSION		

tb_frame_A3_P_AM_T
Rev. E 2006/04/15

CONNECTOR WITH CLEAR LATCH

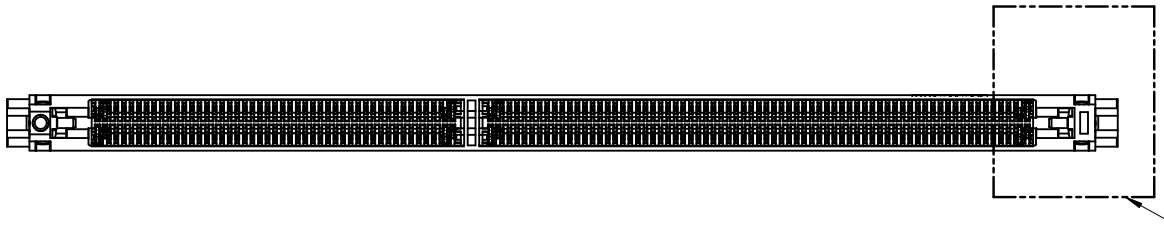

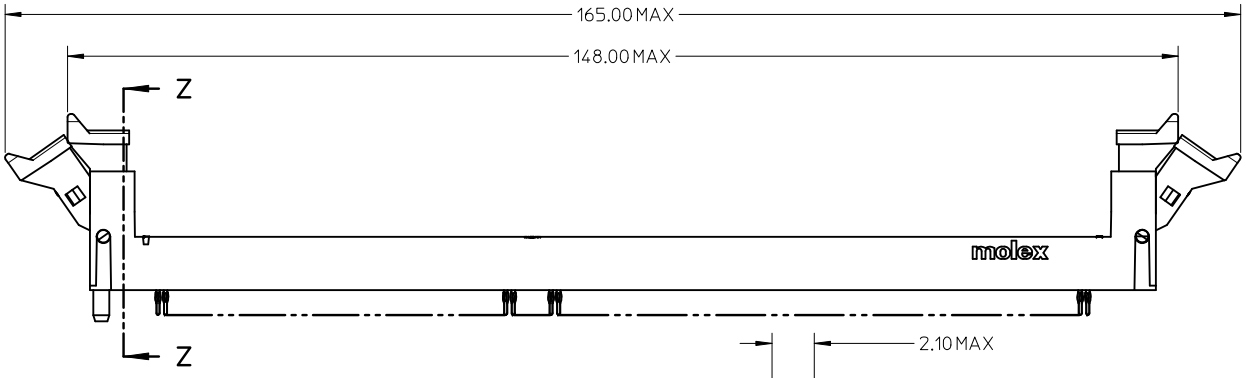

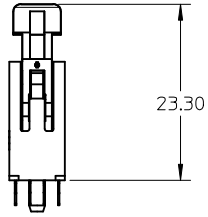

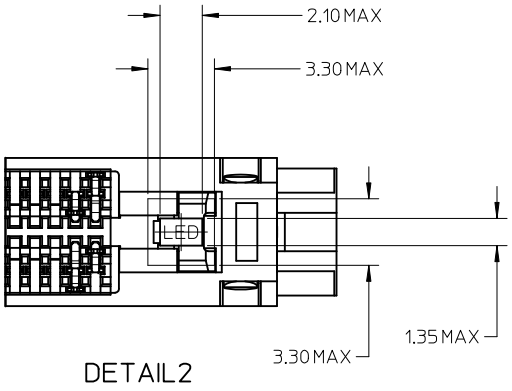

DETAIL2

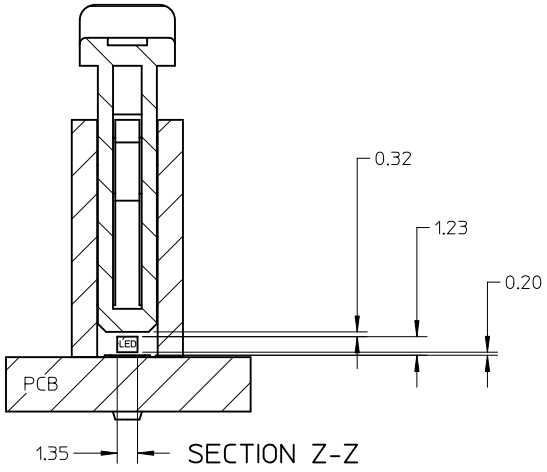

SECTION Z-Z

REMOVE PART NO.			
EC NO: S2012-0828	2012/04/30		
DRWN:CGTAN	2012/05/11		
CH'KD:CCTEH	2012/05/11		
APPR:SHLENI		DESCRIPTION	
A5		REV	

QUALITY SYMBOLS
▼=0
Ⓒ=0

GENERAL TOLERANCES (UNLESS SPECIFIED)	mm	INCH
4 PLACES	± ---	± ---
3 PLACES	± ---	± ---
2 PLACES	± 0.2	± ---
1 PLACE	± ---	± ---
ANGULAR ± 1 °		

DRAFT WHERE APPLICABLE MUST REMAIN WITHIN DIMENSIONS

DIMENSION STYLE	SCALE	DESIGN UNITS	THIRD ANGLE PROJECTION
MM ONLY	NTS	METRIC	

DRAWN BY	CMTEO	DATE 2007/08/29
CHECKED BY	CCTEH	DATE 2007/10/09
APPROVED BY	SHLENI	DATE 2007/10/10

TITLE: DDR3 DIMM, 1.00MM PITCH
240 CKTS
VERTICAL PRESS-FIT

MOLEX INCORPORATED

MATERIAL NO.	DOCUMENT NO.	SHEET NO.
SEE TABLE	SD-78294-001	3 OF 7

SIZE A3

THIS DRAWING CONTAINS INFORMATION THAT IS PROPRIETARY TO MOLEX INCORPORATED AND SHOULD NOT BE USED WITHOUT WRITTEN PERMISSION

MODULE CARD
DDR3 DUAL IN-LINE MEMORY MODULE FAMILY 1.00MM CONTACT CENTERS
(JEDEC MO-269, ISSUE A, 12/05)

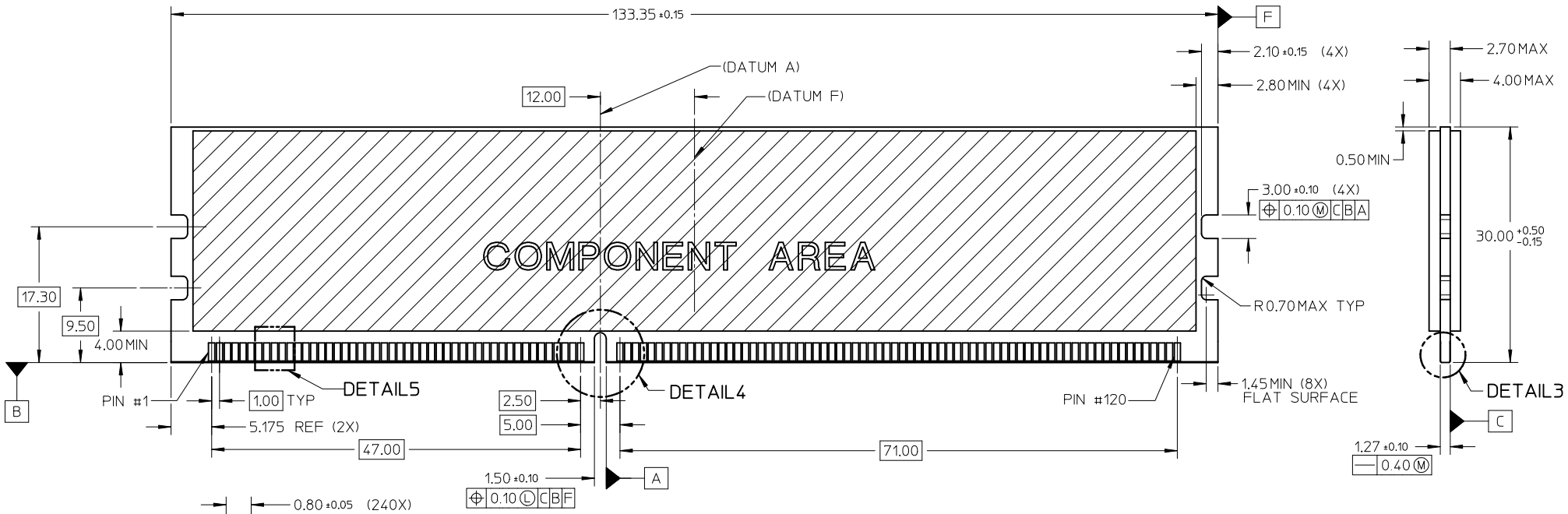

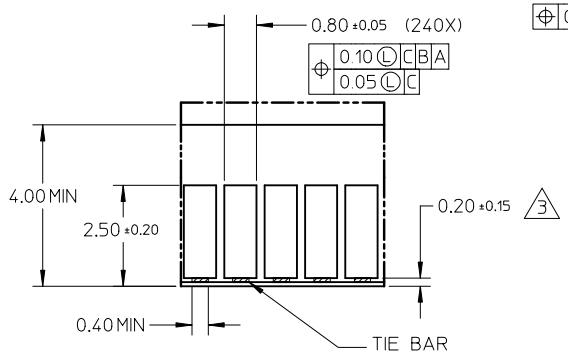

DETAIL5

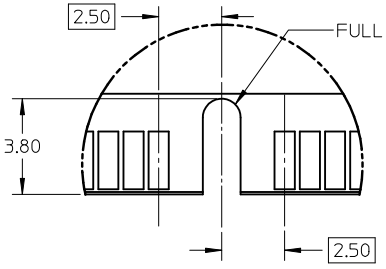

DETAIL4

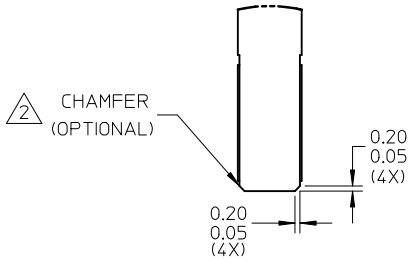

DETAIL3

NOTES:
1. RECOMMENDED PLATING FOR CONTACT PADS:
   PREFERRED: 0.76 MICROMETERS GOLD PLATING MIN
   OVER 2.00 MICROMETERS NICKEL
   ALTERNATIVE: 0.05-0.75 MICROMETERS GOLD PLATING
   OVER 2.00 MICROMETERS NICKEL MUST USE AN ELECTRONIC
   CONTACT GRADE CORROSIVE BARRIER LUBRICANT
2. CHAMFER IS OPTIONAL AND IS NOT TO HIT THE GOLD PADS
3. LEADING EDGE OF GOLD PADS SPECIFIED BY KEEPOUT ZONE
   SHALL BE FREE OF BURRS AND EXTERNAL TIE BARS.

REMOVE PART NO.
EC NO: S2012-0828
DRWN:CGTAN 2012/04/30
CHKD:CCTEH 2012/05/11
APPR:SHLENI 2012/05/11
DESCRIPTION
REV
A5

QUALITY SYMBOLS
▼=0
Ⓒ=0

GENERAL TOLERANCES (UNLESS SPECIFIED)

	mm	INCH
4 PLACES	± ---	± ---
3 PLACES	± ---	± ---
2 PLACES	± 0.2	± ---
1 PLACE	± ---	± ---
ANGULAR ± 1 °		

DRAFT WHERE APPLICABLE MUST REMAIN WITHIN DIMENSIONS

DIMENSION STYLE: MM ONLY
SCALE: NTS
DESIGN UNITS: METRIC
THIRD ANGLE PROJECTION

DRAWN BY: CMTEO DATE: 2007/08/29
CHECKED BY: CCTEH DATE: 2007/10/09
APPROVED BY: SHLENI DATE: 2007/10/10

TITLE: DDR3 DIMM, 1.00MM PITCH
240 CKTS
VERTICAL PRESS-FIT

molex MOLEX INCORPORATED

MATERIAL NO.: SEE TABLE
DOCUMENT NO.: SD-78294-001
SHEET NO.: 4 OF 7
SIZE: A3

THIS DRAWING CONTAINS INFORMATION THAT IS PROPRIETARY TO MOLEX INCORPORATED AND SHOULD NOT BE USED WITHOUT WRITTEN PERMISSION

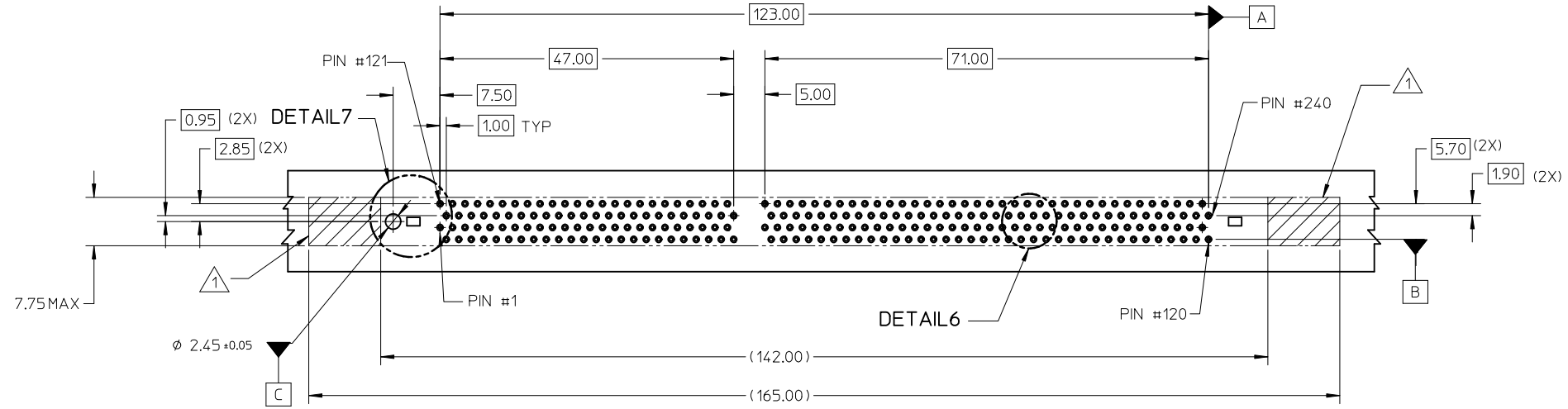

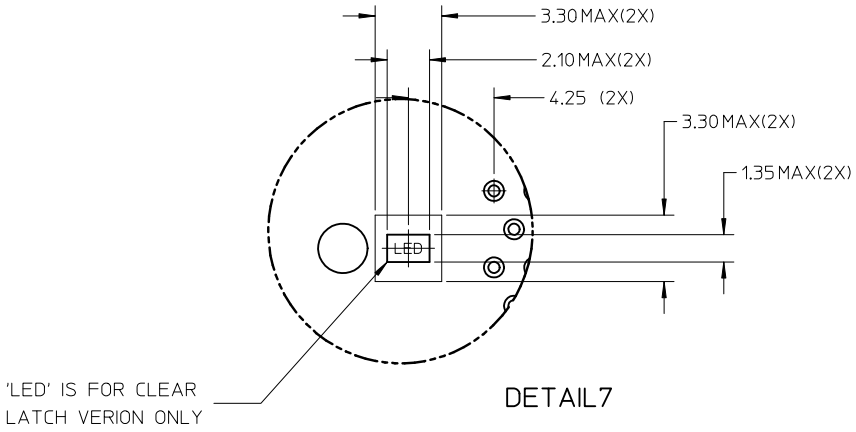

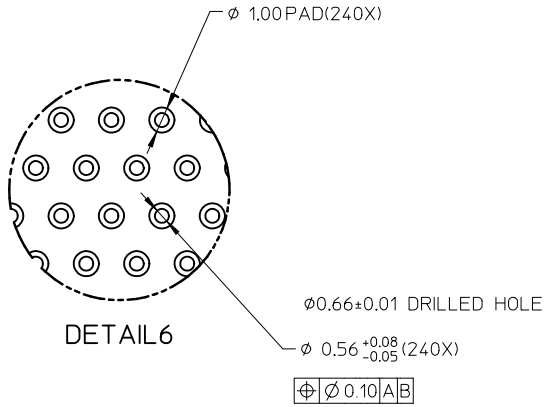

NOTE:

1. KEEP OUT AREA IS THE AREA WHERE THE CONNECTOR (INCLUDING LATCH) IS MOUNTED ON THE PCB.

REMOVE PART NO. EC NO: S2012-0828 DRWN:CGTAN 2012/04/30 CH'KD:CCTEH 2012/05/11 APPR:SHLENI 2012/05/11	QUALITY SYMBOLS ▼=0 C=0	GENERAL TOLERANCES (UNLESS SPECIFIED)	DIMENSION STYLE MM ONLY	SCALE NTS	DESIGN UNITS METRIC	THIRD ANGLE PROJECTION	
A5	REV	DESCRIPTION	DRAWN BY CMTEO DATE 2007/08/29	TITLE DDR3 DIMM, 1.00MM PITCH 240 CKTS VERTICAL PRESS-FIT			
			CHECKED BY CCTEH DATE 2007/10/09				
			APPROVED BY SHLENI DATE 2007/10/10	molex MOLEX INCORPORATED			
			MATERIAL NO. SEE TABLE	DOCUMENT NO. SD-78294-001	SHEET NO. 5 OF 7		
			SIZE A3	THIS DRAWING CONTAINS INFORMATION THAT IS PROPRIETARY TO MOLEX INCORPORATED AND SHOULD NOT BE USED WITHOUT WRITTEN PERMISSION			

	mm	INCH
4 PLACES	± ---	± ---
3 PLACES	± ---	± ---
2 PLACES	± 0.2	± ---
1 PLACE	± ---	± ---

ANGULAR ± 1 °

DRAFT WHERE APPLICABLE MUST REMAIN WITHIN DIMENSIONS

tb_frame_A3_P_AM_T
Rev. E 2006/04/15

VIEW OF PACKAGING TRAY

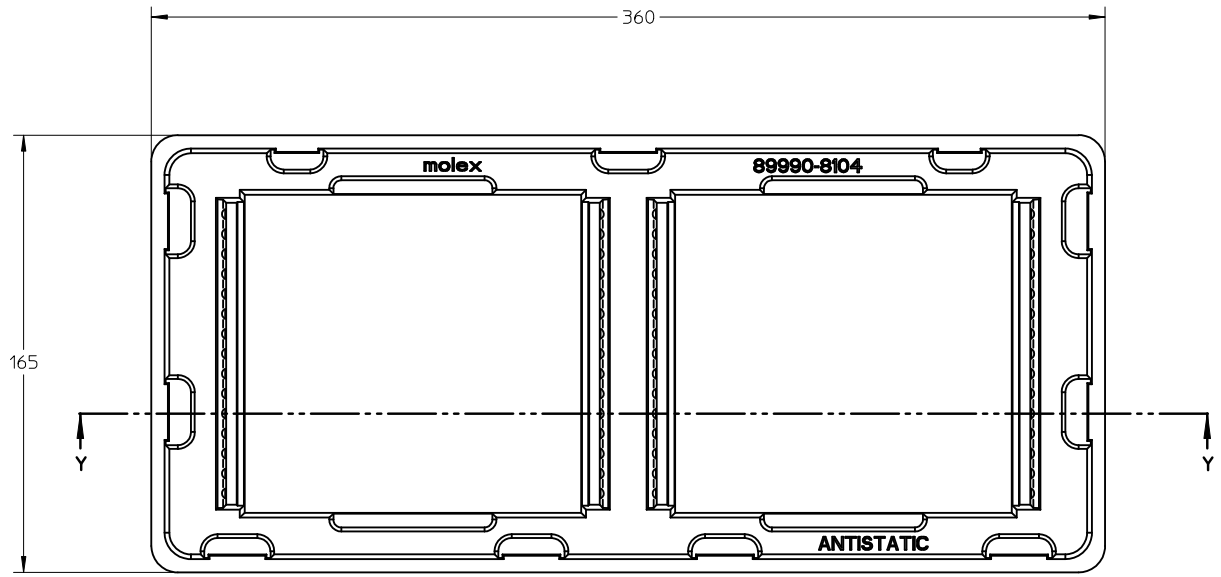

SECTION Y-Y

NOTE:

1. CAVITY QTY : 30PCS

REMOVE PART NO.	DESCRIPTION	REV	
EC NO: S2012-0828	2012/04/30		
DRWN:CGTAN	2012/05/11		
CHKD:CCTEH	2012/05/11		
APPR:SHLENI			
A5			

QUALITY SYMBOLS
▼=0
Ⓒ▽=0

GENERAL TOLERANCES (UNLESS SPECIFIED)

	mm	INCH
4 PLACES	± ---	± ---
3 PLACES	± ---	± ---
2 PLACES	± 0.2	± ---
1 PLACE	± ---	± ---
ANGULAR ± 1 °		

DRAFT WHERE APPLICABLE MUST REMAIN WITHIN DIMENSIONS

DIMENSION STYLE	SCALE	DESIGN UNITS	THIRD ANGLE PROJECTION
MM ONLY	NTS	METRIC	

DRAWN BY	CMTEO	DATE 2007/08/29
CHECKED BY	CCTEH	DATE 2007/10/09
APPROVED BY	SHLENI	DATE 2007/10/10

TITLE: DDR3 DIMM, 1.00MM PITCH
240 CKTS
VERTICAL PRESS-FIT

molex MOLEX INCORPORATED

MATERIAL NO.	DOCUMENT NO.	SHEET NO.
SEE TABLE	SD-78294-001	6 OF 7

SIZE A3

THIS DRAWING CONTAINS INFORMATION THAT IS PROPRIETARY TO MOLEX INCORPORATED AND SHOULD NOT BE USED WITHOUT WRITTEN PERMISSION

TIN OPTION

PART NO.	VOLTAGE KEY POS.	VOLTAGE	DIM 'P'	RECOMMENDED PCB THICKNESS	PLATING OPTION	HOUSING COLOUR	LATCH COLOUR	PRODUCT SPECIFICATION
78294-0001	CENTER	1.5V	3.30	3.60	CONTACT AREA: 0.76 MICROMETER/ 30 MICROINCH MIN. GOLD OVER 1.27 MICROMETER/ 50 MICROINCH MIN NICKEL UNDERPLATE SOLDER-TAIL: 0.38-1.52 MICROMETER/15-60 MICROINCH TIN OVER 1.27MICROMETER/ 50 MICROINCH MIN NICKEL UNDERPLATE	BLACK	BLACK	PS-78294-002
78294-0002			4.20	4.57				
78294-0005			3.30	3.60		BLACK	CLEAR	
78294-0006			4.20	4.57				
78294-0007			3.30	3.60		NATURAL (OFF WHITE)	NATURAL (OFF WHITE)	
78294-0008			4.20	4.57				
78294-0009			3.30	3.60		BLACK	NATURAL (OFF WHITE)	
78294-0010			4.20	4.57				
78294-0003			3.30	3.60	CONTACT AREA: 0.38 MICROMETER/ 15 MICROINCH MIN. GOLD OVER 1.27 MICROMETER/ 50 MICROINCH MIN NICKEL UNDERPLATE SOLDER-TAIL: 0.38-1.52 MICROMETER/15-60 MICROINCH TIN OVER 1.27MICROMETER/ 50 MICROINCH MIN NICKEL UNDERPLATE	BLACK	BLACK	PS-78294-001
78294-0004			4.20	4.57				
78294-0105			3.30	3.60		BLACK	CLEAR	
78294-0106			4.20	4.57				

REMOVE PART NO.
EC NO: S2012-0828 2012/04/30
DRWN:CGTAN 2012/05/11
CH'KD:CCTEH 2012/05/11
APPR:SHLENI
DESCRIPTION
REV
A5

QUALITY SYMBOLS
▼=0
Ⓒ=0

GENERAL TOLERANCES (UNLESS SPECIFIED)

	mm	INCH
4 PLACES	± ---	± ---
3 PLACES	± ---	± ---
2 PLACES	± 0.2	± ---
1 PLACE	± ---	± ---
ANGULAR ± 1 °		

DRAFT WHERE APPLICABLE MUST REMAIN WITHIN DIMENSIONS

DIMENSION STYLE: MM ONLY
SCALE: NTS
DESIGN UNITS: METRIC
THIRD ANGLE PROJECTION

DRAWN BY: CMTEO DATE: 2007/08/29
CHECKED BY: CCTEH DATE: 2007/10/09
APPROVED BY: SHLENI DATE: 2007/10/10
MATERIAL NO.: SEE TABLE

TITLE: DDR3 DIMM, 1.00MM PITCH 240 CKTS VERTICAL PRESS-FIT
MOLEX INCORPORATED
DOCUMENT NO.: SD-78294-001
SHEET NO.: 7 OF 7
SIZE: A3

THIS DRAWING CONTAINS INFORMATION THAT IS PROPRIETARY TO MOLEX INCORPORATED AND SHOULD NOT BE USED WITHOUT WRITTEN PERMISSION