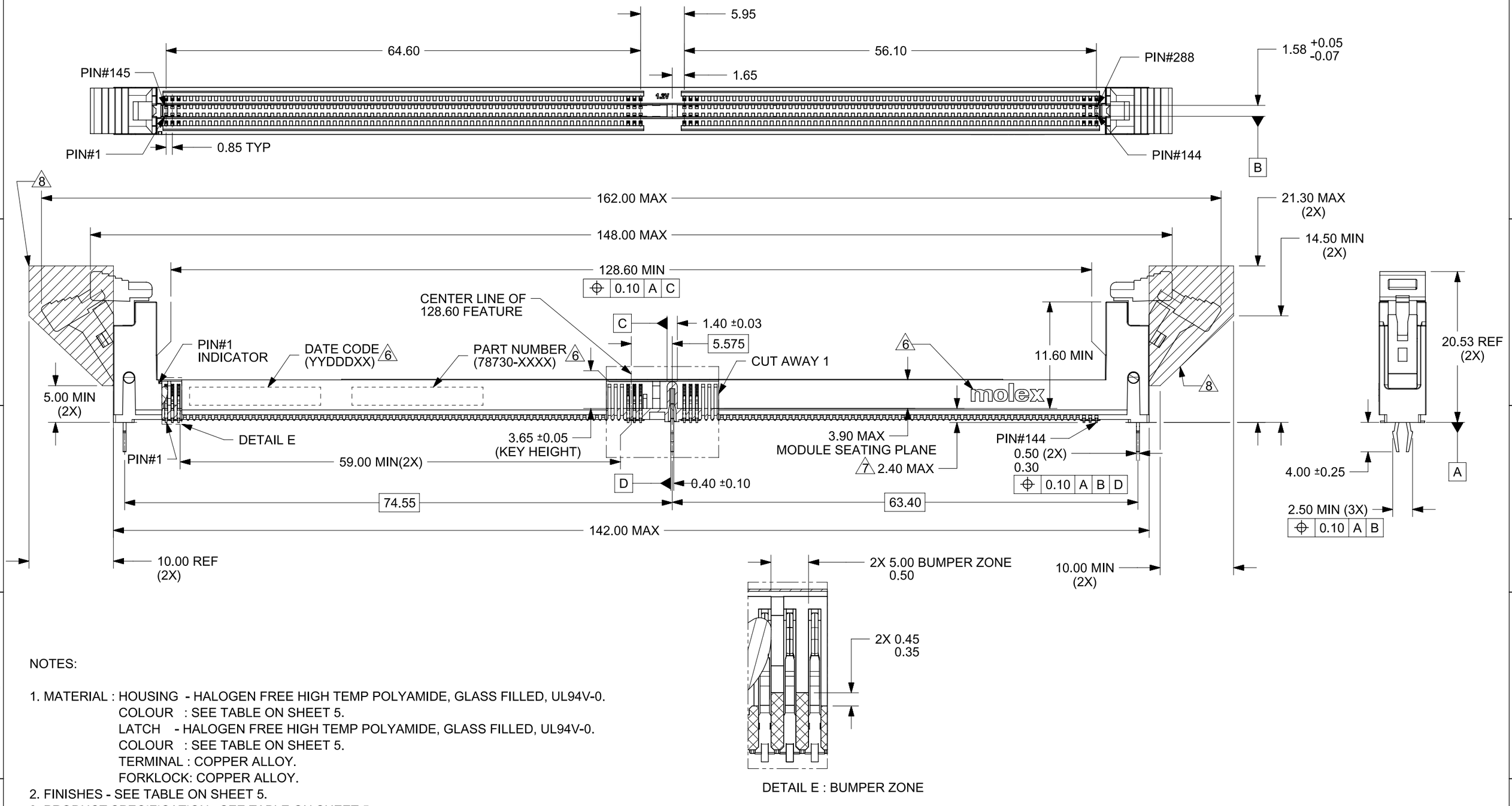

DETAIL E : BUMPER ZONE

NOTES:

1. MATERIAL : HOUSING - HALOGEN FREE HIGH TEMP POLYAMIDE, GLASS FILLED, UL94V-0.
   COLOUR : SEE TABLE ON SHEET 5.
   LATCH - HALOGEN FREE HIGH TEMP POLYAMIDE, GLASS FILLED, UL94V-0.
   COLOUR : SEE TABLE ON SHEET 5.
   TERMINAL : COPPER ALLOY.
   FORKLOCK: COPPER ALLOY.
2. FINISHES - SEE TABLE ON SHEET 5.
3. PRODUCT SPECIFICATION : SEE TABLE ON SHEET 5.
4. PACKAGING SPECIFICATION: PRODUCT SHALL BE PACKED IN TRAY, SEE SHEET 5
5. CARD SLOT ACCEPTS 1.40±0.10MM MODULE THICKNESS (MEASURED OVER P.C. PADS).
6. MOLEX LOGO, DATE & PART NO. INDICATED ON HOUSING.
7. MODULE SEATING PLANE.
8. KEEP OUT ZONE RESERVED FOR LATCH.
9. KEEP OUT AREA IS THE AREA WHERE THE CONNECTOR (INCLUDES LATCHES IN OPENING POSITION) IS MOUNTED ON THE PCB.
10. REFER TO AS-78730-001 FOR CONNECTOR APPLICATION GUIDELINE.
11. REFER TO AS-78730-002 FOR PCB ROUTING RECOMMENDATIONS.

DOCUMENT STATUS	P1	RELEASE DATE	2018/09/10 02:41:39

SYMBOLS	DIMENSION UNITS	SCALE
= 0	MM	NTS
= 0	GENERAL TOLERANCES (UNLESS SPECIFIED)	
= 0	ANGULAR TOL ± 3.0 °	
= 0	4 PLACES ±	
= 0	3 PLACES ±	
= 0	2 PLACES ± 0.2	
= 0	1 PLACE ±	
= 0	0 PLACES ±	
= 0	DRAFT WHERE APPLICABLE MUST REMAIN WITHIN DIMENSIONS	

THIS DRAWING CONTAINS INFORMATION THAT IS PROPRIETARY TO MOLEX ELECTRONIC TECHNOLOGIES, LLC AND SHOULD NOT BE USED WITHOUT WRITTEN PERMISSION

CURRENT REV DESC: ADD NEW PN

EC NO: 174465
DRWN: CCV 2018/03/06
CHK'D: SHLENI 2018/09/10
APPR: SHLENI 2018/09/10

INITIAL REVISION:
DRWN: EKSOH 2016/03/08
APPR: SHLENI 2012/05/09

THIRD ANGLE PROJECTION | DRAWING: A3-SIZE | SERIES: 78730

molex

DDR4 DIMM, 0.85MM PITCH
288 CKTS, VERT SMT

PRODUCT CUSTOMER DRAWING

DOCUMENT NUMBER	DOC TYPE	DOC PART	REVISION
SD-78730-002	PSD	001	A

MATERIAL NUMBER	CUSTOMER	SHEET NUMBER
SEE TABLE	GENERAL MARKET	1 OF 5

FORMAT: master-tb-prod-A3
REVISION: H
DATE: 2018/01/18

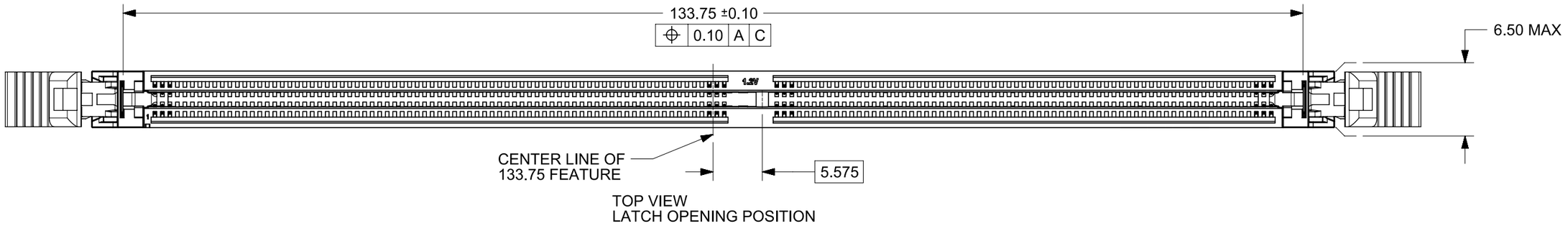

VIEWS WITH P&P TAPE OPTION

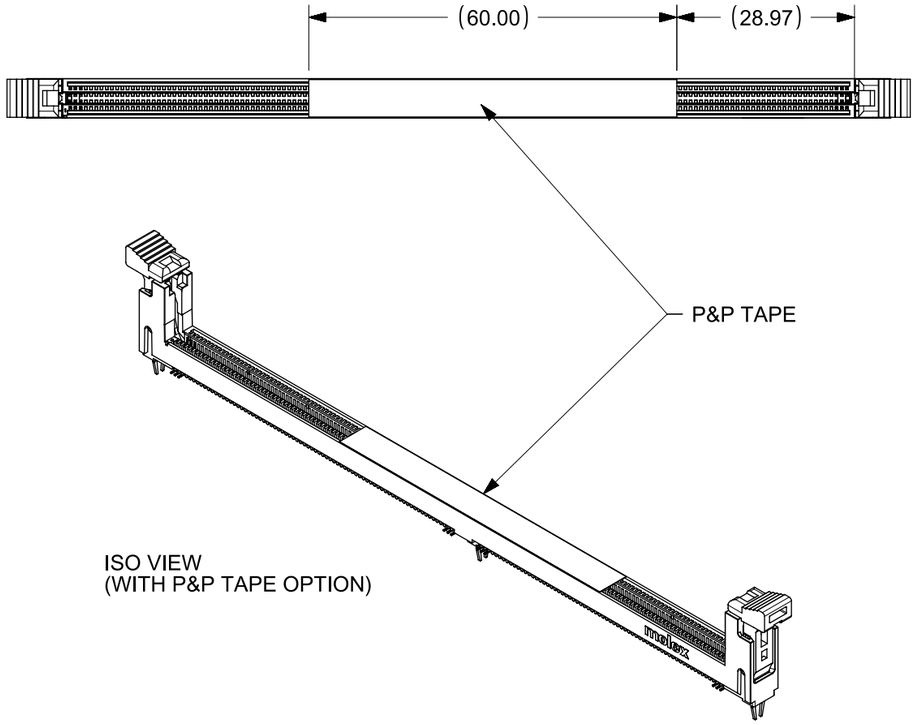

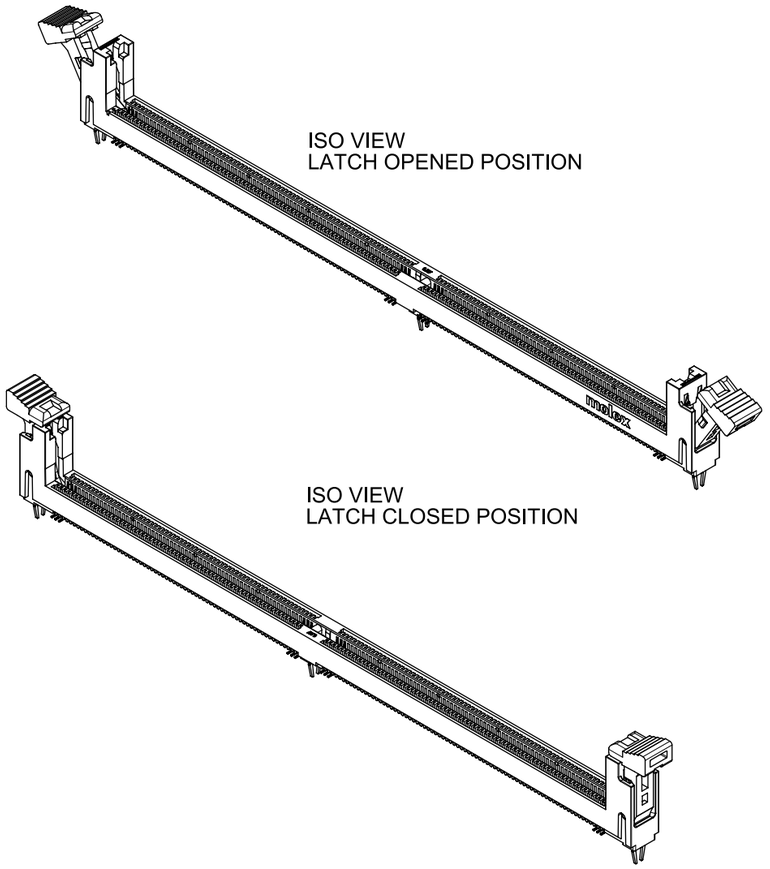

SYMBOLS	
FA	= 0
FC	= 0
FB	= 0
S	= 0
▼	= 0
C	= 0
☒	= 0
■	= 0
V	= 0

THIS DRAWING CONTAINS INFORMATION THAT IS PROPRIETARY TO MOLEX ELECTRONIC TECHNOLOGIES, LLC AND SHOULD NOT BE USED WITHOUT WRITTEN PERMISSION

DIMENSION UNITS	SCALE
MM	NTS

GENERAL TOLERANCES (UNLESS SPECIFIED)

ANGULAR TOL	±	3.0 °
4 PLACES	±	
3 PLACES	±	
2 PLACES	±	0.2
1 PLACE	±	
0 PLACES	±	

DRAFT WHERE APPLICABLE MUST REMAIN WITHIN DIMENSIONS

CURRENT REV DESC: ADD NEW PN

EC NO:	174465	
DRWN:	CCV	2018/03/06
CHK'D:	SHLENI	2018/09/10
APPR:	SHLENI	2018/09/10

INITIAL REVISION:

DRWN:	EKSOH	2016/03/08
APPR:	SHLENI	2012/05/09

THIRD ANGLE PROJECTION

DRAWING	SERIES
A3-SIZE	78730

molex

DDR4 DIMM, 0.85MM PITCH
288 CKTS, VERT SMT

PRODUCT CUSTOMER DRAWING

DOCUMENT NUMBER	DOC TYPE	DOC PART	REVISION
SD-78730-002	PSD	001	A

MATERIAL NUMBER	CUSTOMER	SHEET NUMBER
SEE TABLE	GENERAL MARKET	2 OF 5

DOCUMENT STATUS	P1	RELEASE DATE	2018/09/10 02:41:39

FORMAT: master-tb-prod-A3
REVISION: H
DATE: 2018/01/18

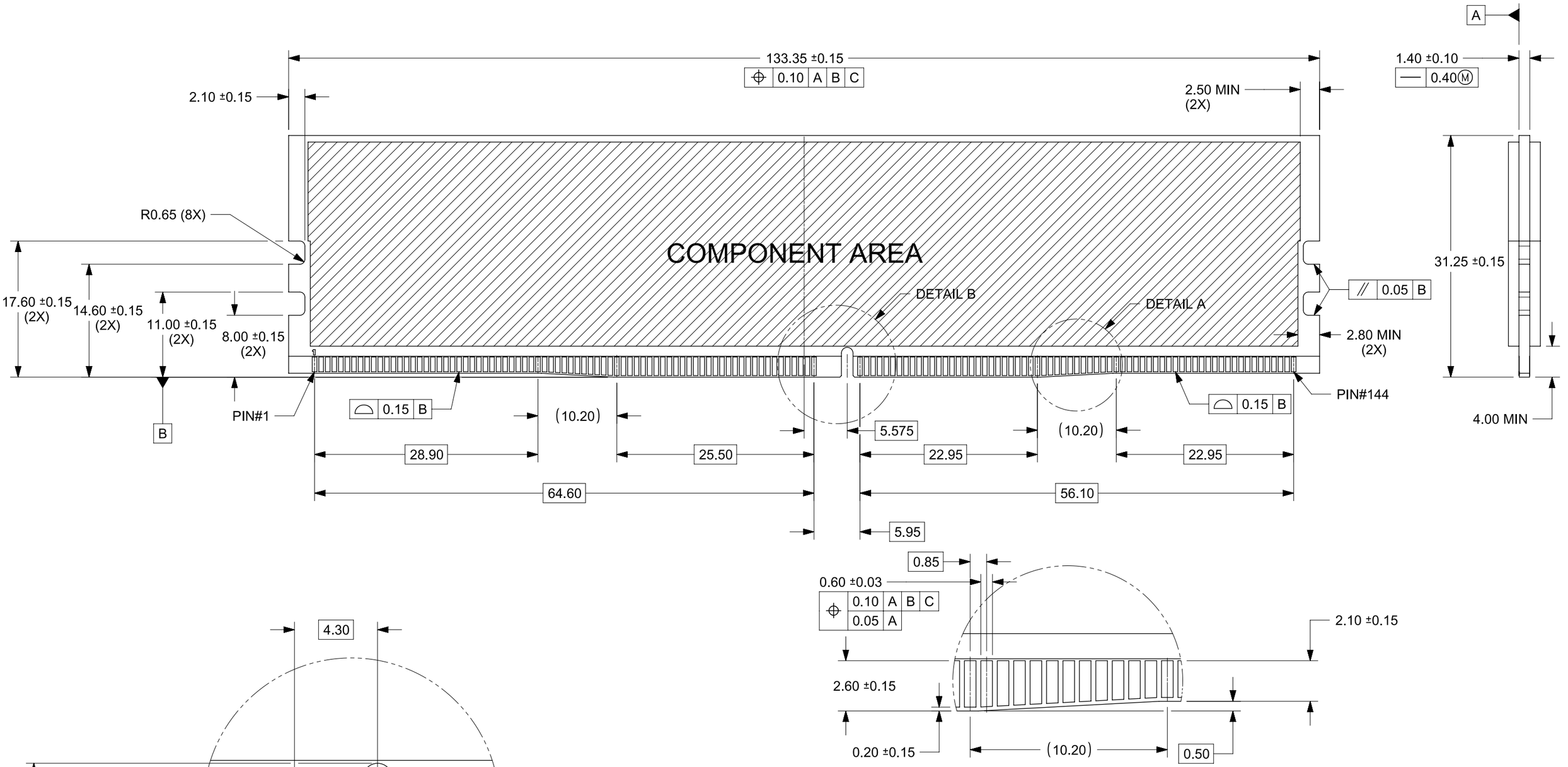

SYMBOLS	THIS DRAWING CONTAINS INFORMATION THAT IS PROPRIETARY TO MOLEX ELECTRONIC TECHNOLOGIES, LLC AND SHOULD NOT BE USED WITHOUT WRITTEN PERMISSION			
F = 0	DIMENSION UNITS: MM	SCALE: NTS	CURRENT REV DESC: ADD NEW PN	molex
E = 0	GENERAL TOLERANCES (UNLESS SPECIFIED)			DDR4 DIMM, 0.85MM PITCH 288 CKTS, VERT SMT
B = 0	ANGULAR TOL ± 3.0°		EC NO: 174465	PRODUCT CUSTOMER DRAWING
S = 0	4 PLACES ±		DRWN: CCV 2018/03/06	DOCUMENT NUMBER: SD-78730-002 / DOC TYPE: PSD / DOC PART: 001 / REVISION: A
▼ = 0	3 PLACES ±		CHK'D: SHLENI 2018/09/10	
C = 0	2 PLACES ± 0.2		APPR: SHLENI 2018/09/10	
☒ = 0	1 PLACE ±		INITIAL REVISION:	
■ = 0	0 PLACES ±		DRWN: EKSOH 2016/03/08	
▽ = 0	DRAFT WHERE APPLICABLE MUST REMAIN WITHIN DIMENSIONS		APPR: SHLENI 2012/05/09	
			THIRD ANGLE PROJECTION / DRAWING: A3-SIZE / SERIES: 78730	MATERIAL NUMBER: SEE TABLE / CUSTOMER: GENERAL MARKET / SHEET NUMBER: 3 OF 5

DOCUMENT STATUS	P1	RELEASE DATE	2018/09/10 02:41:39

FORMAT: master-tb-prodA3
REVISION: H
DATE: 2018/01/18

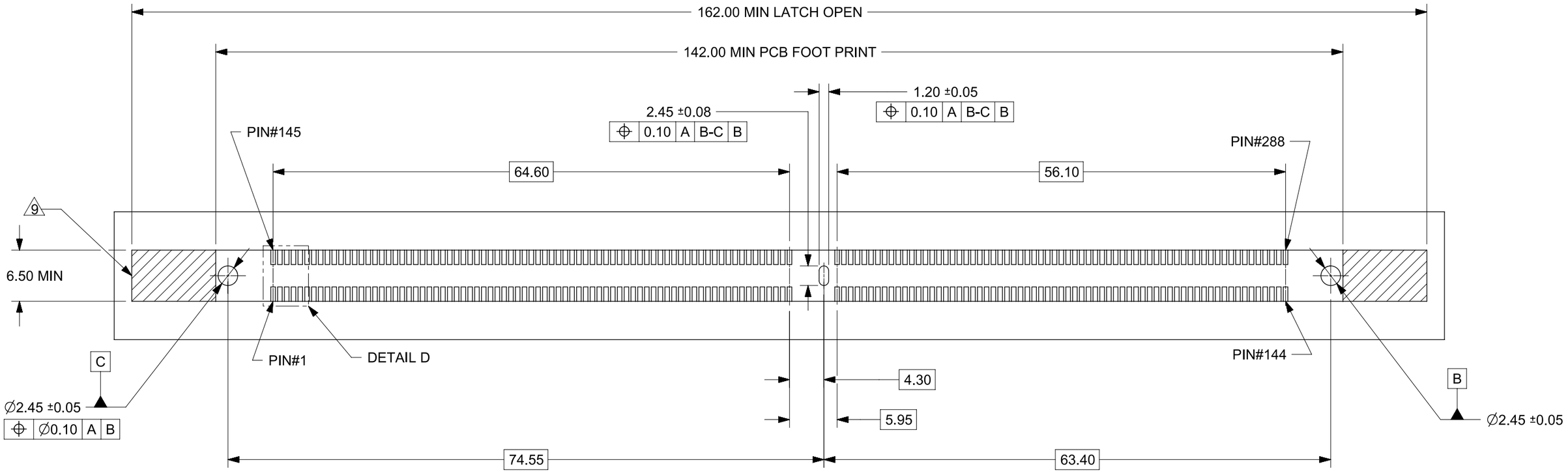

RECOMMENDED PCB THICKNESS: 1.57MM TO 3.18MM

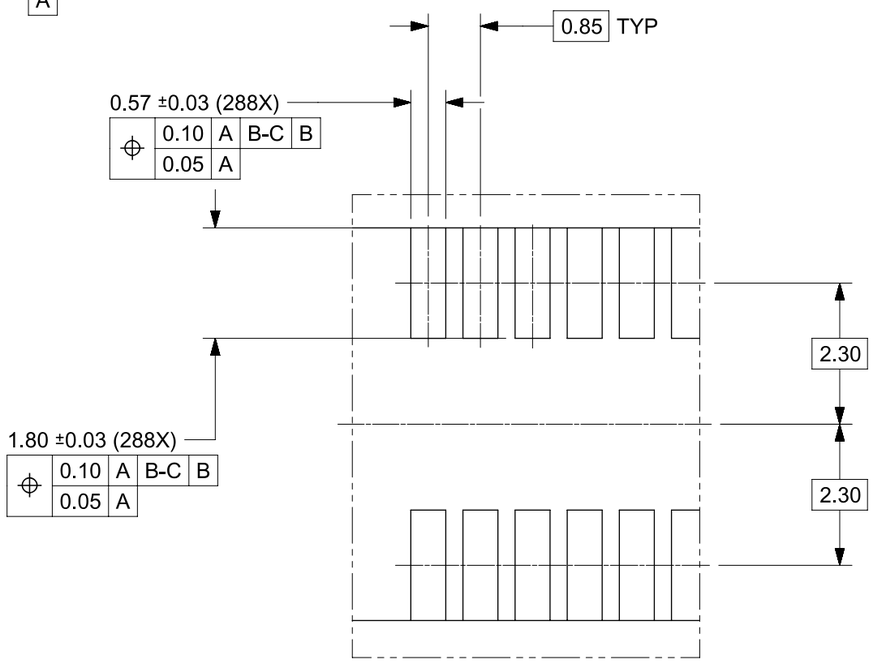

DETAIL D

THIS DRAWING CONTAINS INFORMATION THAT IS PROPRIETARY TO MOLEX ELECTRONIC TECHNOLOGIES, LLC AND SHOULD NOT BE USED WITHOUT WRITTEN PERMISSION

SYMBOLS	DIMENSION UNITS	SCALE
F = 0	MM	NTS
E = 0	GENERAL TOLERANCES (UNLESS SPECIFIED)	
F = 0	ANGULAR TOL ± 3.0 °	
S = 0	4 PLACES ±	
▼ = 0	3 PLACES ±	
C = 0	2 PLACES ± 0.2	
☒ = 0	1 PLACE ±	
■ = 0	0 PLACES ±	
V = 0	DRAFT WHERE APPLICABLE MUST REMAIN WITHIN DIMENSIONS	

CURRENT REV DESC: ADD NEW PN

EC NO: 174465
DRWN: CCV 2018/03/06
CHK'D: SHLENI 2018/09/10
APPR: SHLENI 2018/09/10

INITIAL REVISION:
DRWN: EKSOH 2016/03/08
APPR: SHLENI 2012/05/09

THIRD ANGLE PROJECTION | DRAWING: A3-SIZE | SERIES: 78730

molex

DDR4 DIMM, 0.85MM PITCH
288 CKTS, VERT SMT

PRODUCT CUSTOMER DRAWING

DOCUMENT NUMBER	DOC TYPE	DOC PART	REVISION
SD-78730-002	PSD	001	A

MATERIAL NUMBER	CUSTOMER	SHEET NUMBER
SEE TABLE	GENERAL MARKET	4 OF 5

DOCUMENT STATUS	P1	RELEASE DATE	2018/09/10 02:41:39

FORMAT: master4b-prod-A3
REVISION: H
DATE: 2018/01/18

CKT SIZE	ASSEMBLY PART NO.	HOUSING COLOUR	LATCH COLOUR	P&P OPTION	PLATING OPTION		PRODUCT SPEC. NO.	PACKAGING SPEC. NO.
					TERMINAL	FORKLOCK		
288	78730-1002	BLACK	BLACK	NO	0.76 MICROMETER (30 MICROINCH) MIN GOLD ON CONTACT 2.54 MICROMETER (100 MICROINCH) MIN TIN ON SOLDERTAILS 1.27 MICROMETER (50 MICROINCH) MIN NICKEL UNDERPLATE	1.0 MICROMETER (40 MICROINCH) MIN TIN OVERALL (PRE-PLATED)	PS-78730-001	PK-78730-001
	78730-1003	BLACK	OFF-WHITE					
	78730-1004	OFF-WHITE	BLACK					
	78730-1005	OFF-WHITE	OFF-WHITE					
	78730-1006	BLUE	BLUE					
	78730-1008	BLUE	OFF-WHITE					
	78730-1007	BLACK	BLUE					
	78730-2002	BLACK	BLACK	YES				
	78730-2003	BLACK	OFF-WHITE					
	78730-2004	OFF-WHITE	BLACK					
	78730-2005	OFF-WHITE	OFF-WHITE					
	78730-2006	BLUE	BLUE					
	78730-2008	BLUE	OFF-WHITE					
	78730-2007	BLACK	BLUE					
	78730-1152	BLACK	BLACK	NO	0.38 MICROMETER (15 MICROINCH) MIN GOLD ON CONTACT 2.54 MICROMETER (100 MICROINCH) MIN TIN ON SOLDERTAILS 1.27 MICROMETER (50 MICROINCH) MIN NICKEL UNDERPLATE		PS-78730-002	
	78730-1153	BLACK	OFF-WHITE					
	78730-1154	OFF-WHITE	BLACK					
	78730-1155	OFF-WHITE	OFF-WHITE					
	78730-1156	BLUE	BLUE					
	78730-1158	BLUE	OFF-WHITE					
	78730-1157	BLACK	BLUE					
	78730-2152	BLACK	BLACK	YES				
	78730-2153	BLACK	OFF-WHITE					
	78730-2154	OFF-WHITE	BLACK					
	78730-2155	OFF-WHITE	OFF-WHITE					
	78730-2156	BLUE	BLUE					
	78730-2158	BLUE	OFF-WHITE					
	78730-2157	BLACK	BLUE					

SYMBOLS
E = 0
C = 0
F = 0
S = 0
▼ = 0
C = 0
☒ = 0
■ = 0
▽ = 0

THIS DRAWING CONTAINS INFORMATION THAT IS PROPRIETARY TO MOLEX ELECTRONIC TECHNOLOGIES, LLC AND SHOULD NOT BE USED WITHOUT WRITTEN PERMISSION

DIMENSION UNITS	SCALE
MM	NTS

GENERAL TOLERANCES (UNLESS SPECIFIED)

ANGULAR TOL	± 3.0 °
4 PLACES	±
3 PLACES	±
2 PLACES	± 0.2
1 PLACE	±
0 PLACES	±

DRAFT WHERE APPLICABLE MUST REMAIN WITHIN DIMENSIONS

CURRENT REV DESC: ADD NEW PN

EC NO: 174465
DRWN: CCV 2018/03/06
CHK'D: SHLENI 2018/09/10
APPR: SHLENI 2018/09/10

INITIAL REVISION:
DRWN: EKSOH 2016/03/08
APPR: SHLENI 2012/05/09

molex

DDR4 DIMM, 0.85MM PITCH
288 CKTS, VERT SMT

PRODUCT CUSTOMER DRAWING

DOCUMENT NUMBER	DOC TYPE	DOC PART	REVISION
SD-78730-002	PSD	001	A

THIRD ANGLE PROJECTION	DRAWING	SERIES	MATERIAL NUMBER	CUSTOMER	SHEET NUMBER
	A3-SIZE	78730	SEE TABLE	GENERAL MARKET	5 OF 5

DOCUMENT STATUS	P1	RELEASE DATE	2018/09/10 02:41:39

FORMAT: master-tb-prod-A3
REVISION: H
DATE: 2018/01/18