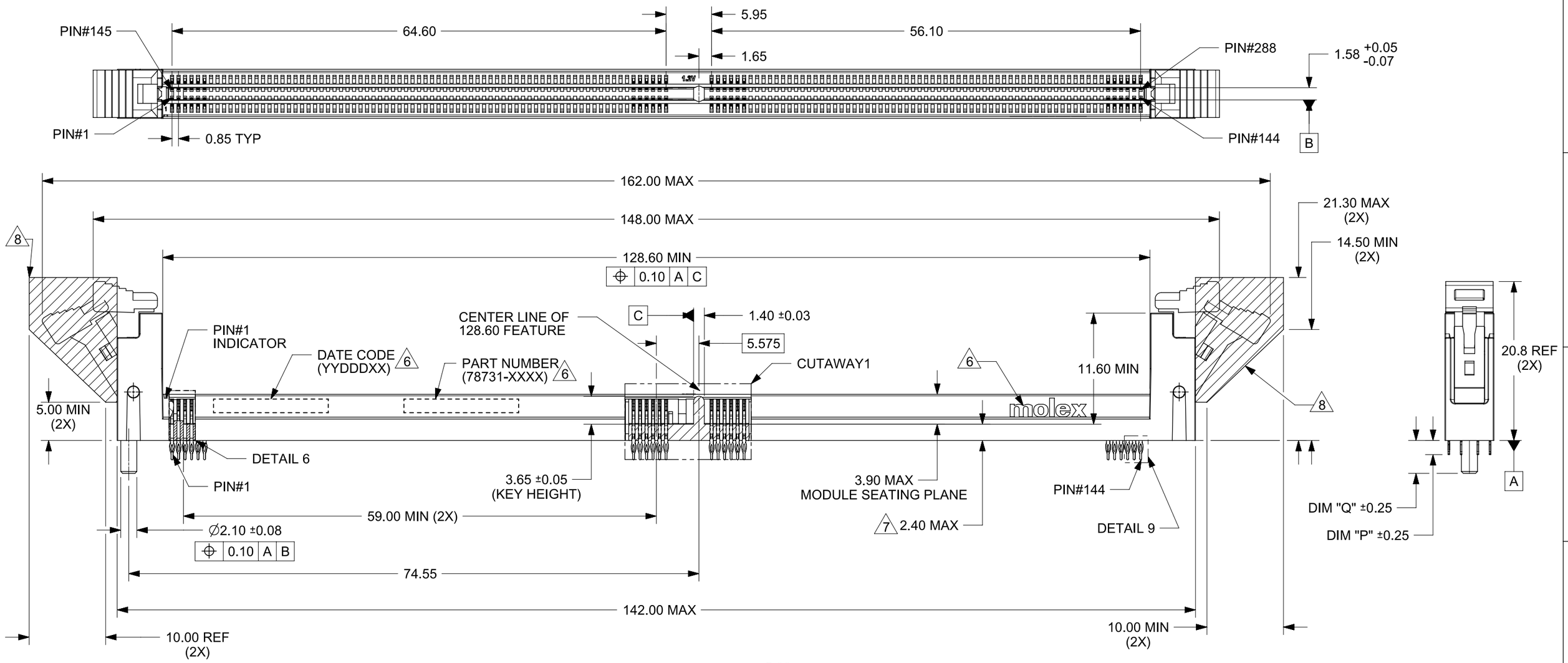

NOTES:

1. MATERIAL : HOUSING - HALOGEN FREE HIGH TEMP POLYAMIDE, GLASS FILLED, UL94V-0.
   COLOUR : SEE TABLE ON SHEET 5.
   LATCH - HALOGEN FREE HIGH TEMP POLYAMIDE, GLASS FILLED, UL94V-0.
   COLOUR : SEE TABLE ON SHEET 5.
   TERMINAL: COPPER ALLOY.
2. FINISHES - SEE TABLE ON SHEET 5.
3. PRODUCT SPECIFICATION : SEE TABLE ON SHEET 5.
4. PACKAGING SPECIFICATION: PRODUCT SHALL BE PACKED IN TRAY, SEE SHEET 5
5. CARD SLOT ACCEPTS 1.40±0.10MM MODULE THICKNESS (MEASURED OVER P.C. PADS).
6. MOLEX LOGO, DATE & PART NO. INDICATED ON HOUSING.
7. MODULE SEATING PLANE.
8. KEEP OUT ZONE RESERVED FOR LATCH.
9. KEEP OUT AREA IS THE AREA WHERE THE CONNECTOR (INCLUDES LATCHES IN OPENING POSITION) IS MOUNTED ON THE PCB.
10. REFER TO AS-78731-001 FOR CONNECTOR MOUNTING AND REWORK INFORMATION.
11. REFER TO AS-78731-003 FOR PCB ROUTING RECOMMENDATIONS.

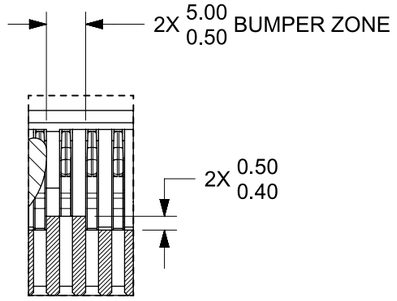

DETAIL 6: BUMPER ZONE

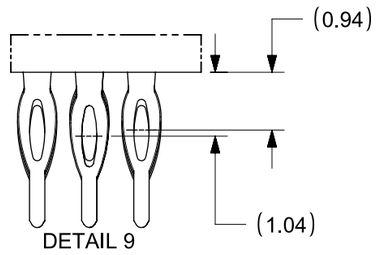

DETAIL 9

THIS DRAWING CONTAINS INFORMATION THAT IS PROPRIETARY TO MOLEX ELECTRONIC TECHNOLOGIES, LLC AND SHOULD NOT BE USED WITHOUT WRITTEN PERMISSION

DIMENSION UNITS	SCALE
MM	NTS

GENERAL TOLERANCES (UNLESS SPECIFIED)

ANGULAR TOL	± 3°
4 PLACES	±
3 PLACES	±
2 PLACES	± 0.200
1 PLACE	±
0 PLACES	±

DRAFT WHERE APPLICABLE MUST REMAIN WITHIN DIMENSIONS

CURRENT REV DESC: REMOVED OBSOLETED PART NUMBERS AS PER PCN #516666

STATUS:	Production	
DRWN:	Pranav Arunkumar	2026-03-05
CHK'D:	Ganesh Rao B	2026-03-27
APPR:	Gurunandan GA	2026-03-27

THIRD ANGLE PROJECTION | DRAWING: A3-SIZE | SERIES: 78731

molex

DDR4 DIMM, 0.85MM PITCH
288CKTS, VERTICAL PF

PRODUCT CUSTOMER DRAWING

DOCUMENT NUMBER	DOC TYPE	DOC PART	REVISION
SD-78731-001	PSD	001	A3

MATERIAL NUMBER	CUSTOMER	SHEET NUMBER
SEE TABLE	GENERAL MARKET	1 OF 5

FORMAT: TC-db-prod-A3
REVISION: B
DATE: 2022/08/01

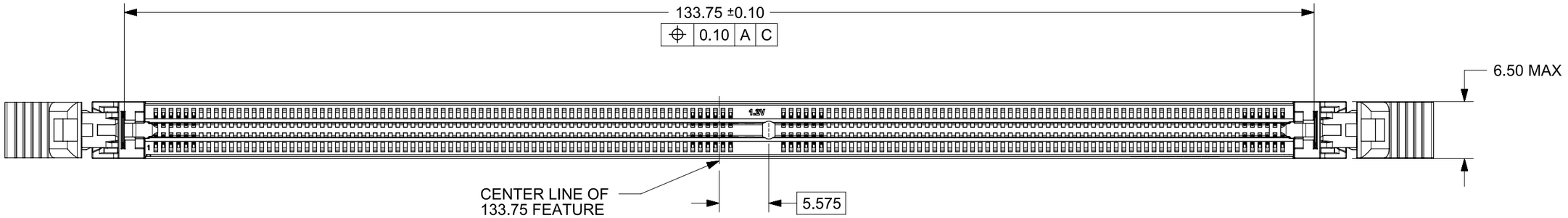

TOP VIEW
IN LATCH OPENING POSITION

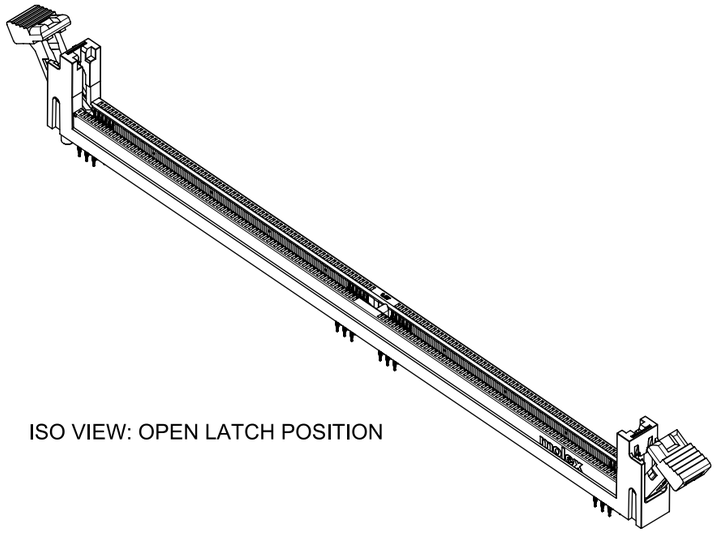

ISO VIEW: OPEN LATCH POSITION

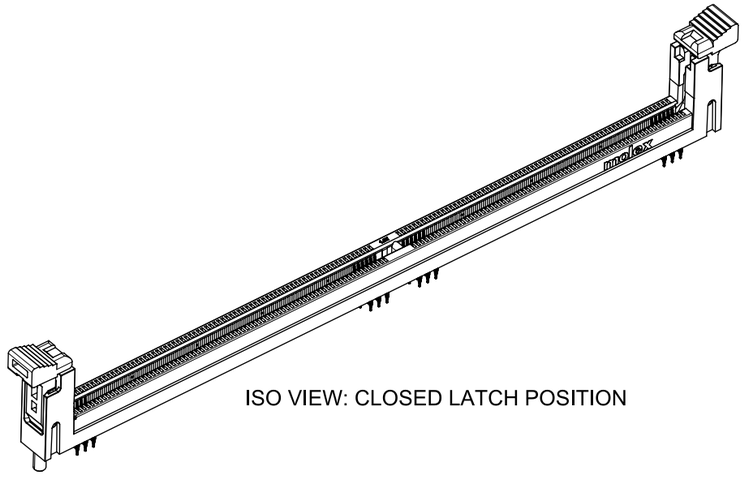

ISO VIEW: CLOSED LATCH POSITION

THIS DRAWING CONTAINS INFORMATION THAT IS PROPRIETARY TO MOLEX ELECTRONIC TECHNOLOGIES, LLC AND SHOULD NOT BE USED WITHOUT WRITTEN PERMISSION

DIMENSION UNITS	SCALE
MM	NTS

GENERAL TOLERANCES (UNLESS SPECIFIED)

ANGULAR TOL	± 3°
4 PLACES	±
3 PLACES	±
2 PLACES	± 0.200
1 PLACE	±
0 PLACES	±

DRAFT WHERE APPLICABLE MUST REMAIN WITHIN DIMENSIONS

CURRENT REV DESC: REMOVED OBSOLETED PART NUMBERS AS PER PCN #516666

STATUS: Production
DRWN: Pranav Arunkumar 2026-03-05
CHK'D: Ganesh Rao B 2026-03-27
APPR: Gurunandan GA 2026-03-27

THIRD ANGLE PROJECTION

DRAWING	SERIES
A3-SIZE	78731

molex

DDR4 DIMM, 0.85MM PITCH
288CKTS, VERTICAL PF

PRODUCT CUSTOMER DRAWING

DOCUMENT NUMBER	DOC TYPE	DOC PART	REVISION
SD-78731-001	PSD	001	A3

MATERIAL NUMBER	CUSTOMER	SHEET NUMBER
SEE TABLE	GENERAL MARKET	2 OF 5

FORMAT: TC-Dr-prod-A3
REVISION: B
DATE: 2022/08/01

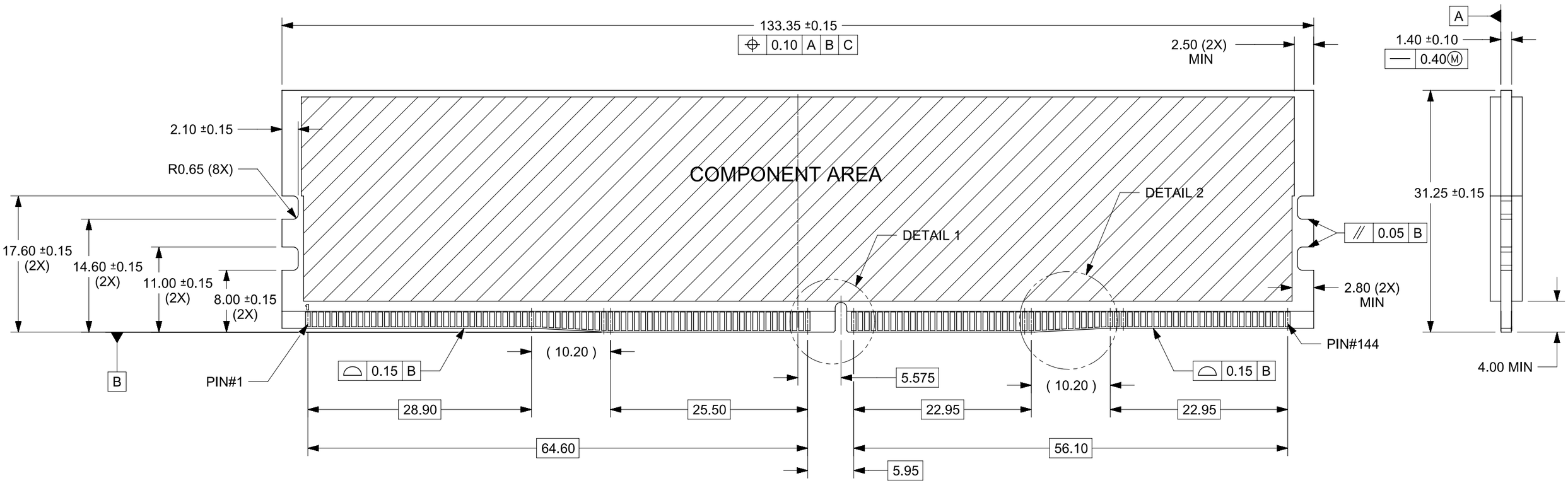

THIS DRAWING CONTAINS INFORMATION THAT IS PROPRIETARY TO MOLEX ELECTRONIC TECHNOLOGIES, LLC AND SHOULD NOT BE USED WITHOUT WRITTEN PERMISSION

DIMENSION UNITS	SCALE
MM	NTS

GENERAL TOLERANCES (UNLESS SPECIFIED)

ANGULAR TOL	± 3°
4 PLACES	±
3 PLACES	±
2 PLACES	± 0.200
1 PLACE	±
0 PLACES	±

DRAFT WHERE APPLICABLE MUST REMAIN WITHIN DIMENSIONS

CURRENT REV DESC: REMOVED OBSOLETED PART NUMBERS AS PER PCN #516666

STATUS: Production
DRWN: Pranav Arunkumar 2026-03-05
CHK'D: Ganesh Rao B 2026-03-27
APPR: Gurunandan GA 2026-03-27

THIRD ANGLE PROJECTION | DRAWING: A3-SIZE | SERIES: 78731

molex

DDR4 DIMM, 0.85MM PITCH
288CKTS, VERTICAL PF

PRODUCT CUSTOMER DRAWING

DOCUMENT NUMBER	DOC TYPE	DOC PART	REVISION
SD-78731-001	PSD	001	A3

MATERIAL NUMBER	CUSTOMER	SHEET NUMBER
SEE TABLE	GENERAL MARKET	3 OF 5

FORMAT: TC-D-prod-A3
REVISION: B
DATE: 2022/08/01

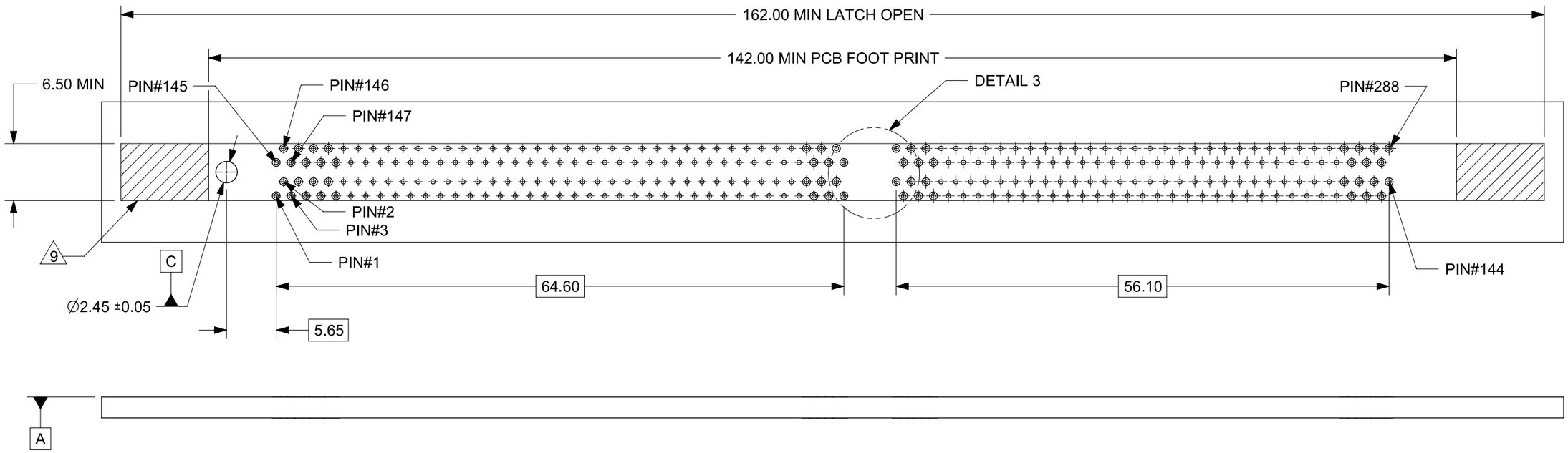

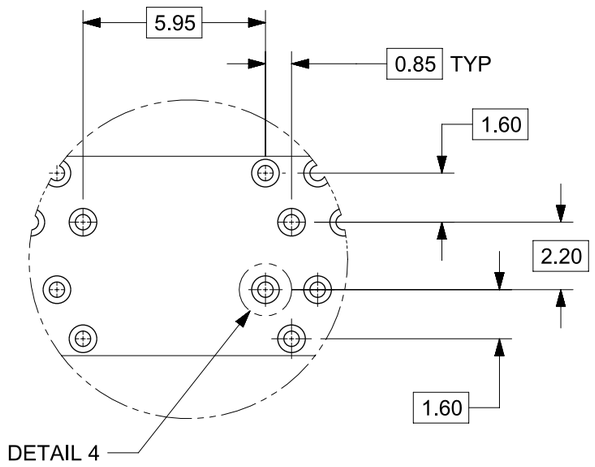

DETAIL 3

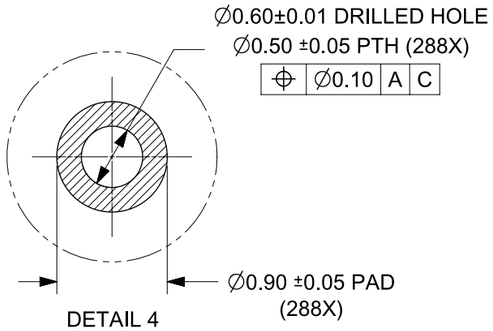

DETAIL 4

THIS DRAWING CONTAINS INFORMATION THAT IS PROPRIETARY TO MOLEX ELECTRONIC TECHNOLOGIES, LLC AND SHOULD NOT BE USED WITHOUT WRITTEN PERMISSION

DIMENSION UNITS	SCALE
MM	NTS

GENERAL TOLERANCES (UNLESS SPECIFIED)

ANGULAR TOL	± 3°
4 PLACES	±
3 PLACES	±
2 PLACES	± 0.200
1 PLACE	±
0 PLACES	±

DRAFT WHERE APPLICABLE MUST REMAIN WITHIN DIMENSIONS

CURRENT REV DESC: REMOVED OBSOLETED PART NUMBERS AS PER PCN #516666

STATUS: Production
DRWN: Pranav Arunkumar 2026-03-05
CHK'D: Ganesh Rao B 2026-03-27
APPR: Gurunandan GA 2026-03-27

THIRD ANGLE PROJECTION | DRAWING: A3-SIZE | SERIES: 78731

molex

DDR4 DIMM, 0.85MM PITCH
288CKTS, VERTICAL PF

PRODUCT CUSTOMER DRAWING

DOCUMENT NUMBER	DOC TYPE	DOC PART	REVISION
SD-78731-001	PSD	001	A3

MATERIAL NUMBER	CUSTOMER	SHEET NUMBER
SEE TABLE	GENERAL MARKET	4 OF 5

FORMAT: TC-dr-prod-A3
REVISION: B
DATE: 2022/08/01

CKT SIZE	ASSEMBLY PART NO.	HOUSING COLOUR	LATCH COLOUR	DIM"P"	DIM"Q"	RECOMMENDED MINIMUM PCB THICKNESS	PLATING OPTION		PRODUCT SPEC. NO.	PACKAGING SPEC. NO.
							CONTACT AREA	TAIL AREA		
288	78731-1002	BLACK	BLACK	2.53	4.30	1.80	0.76 MICROMETER (30 MICROINCH) MIN GOLD ON CONTACT 1.27 MICROMETER (50 MICROINCH) MIN NICKEL UNDERPLATE	0.38 TO 1.52 MICROMETER (15 TO 60 MICROINCH) MIN TIN ON SOLDERTAILS 1.27 MICROMETER (50 MICROINCH) MIN NICKEL UNDERPLATE	PS-78731-001	PK-78731-001
	78731-1003	BLACK	WHITE							
	78731-1004	WHITE	BLACK							
	78731-1007	BLACK	BLACK	3.53						
	78731-1009	WHITE	BLACK							
	78731-1010	WHITE	WHITE							
	78731-1011	BLUE	BLUE							
	78731-2003	BLACK	WHITE	2.53			0.38 MICROMETER (15 MICROINCH) MIN GOLD ON CONTACT 1.27 MICROMETER (50 MICROINCH) MIN NICKEL UNDERPLATE		PS-78731-002	
	78731-2004	WHITE	BLACK							
	78731-2007	BLACK	BLACK	3.53						
	78731-2008	BLACK	WHITE							
	78731-2009	WHITE	BLACK							
	78731-2010	WHITE	WHITE							
	78731-2011	BLUE	BLUE							

THIS DRAWING CONTAINS INFORMATION THAT IS PROPRIETARY TO MOLEX ELECTRONIC TECHNOLOGIES, LLC AND SHOULD NOT BE USED WITHOUT WRITTEN PERMISSION

DIMENSION UNITS	SCALE
MM	NTS

GENERAL TOLERANCES (UNLESS SPECIFIED)	
ANGULAR TOL	± 3°
4 PLACES	±
3 PLACES	±
2 PLACES	± 0.200
1 PLACE	±
0 PLACES	±

DRAFT WHERE APPLICABLE MUST REMAIN WITHIN DIMENSIONS

CURRENT REV DESC: REMOVED OBSOLETED PART NUMBERS AS PER PCN #516666

STATUS: Production

DRWN:	Pranav Arunkumar	2026-03-05
CHK'D:	Ganesh Rao B	2026-03-27
APPR:	Gurunandan GA	2026-03-27

molex

DDR4 DIMM, 0.85MM PITCH
288CKTS, VERTICAL PF

PRODUCT CUSTOMER DRAWING

DOCUMENT NUMBER	DOC TYPE	DOC PART	REVISION
SD-78731-001	PSD	001	A3

THIRD ANGLE PROJECTION	DRAWING	SERIES	MATERIAL NUMBER	CUSTOMER	SHEET NUMBER
	A3-SIZE	78731	SEE TABLE	GENERAL MARKET	5 OF 5

FORMAT: TC-tb-prod-A3
REVISION: B
DATE: 2022/08/01