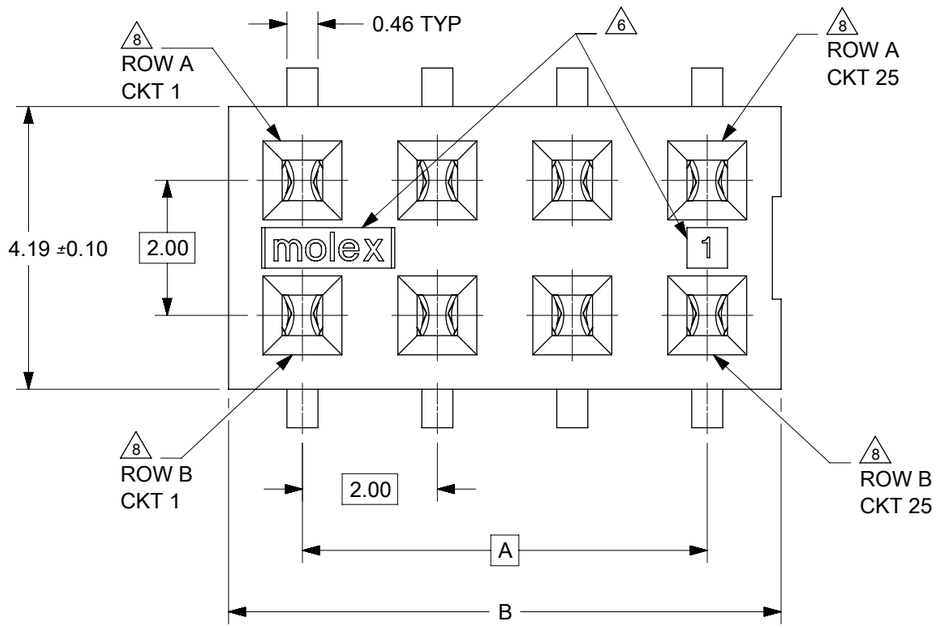

NOTES:

1. MATERIALS:
   HOUSING: LCP, GLASS FILLED, UL94V-0, BLACK
   TERMINAL: COPPER ALLOY
   CAP: NYLON, GLASS FILLED, BLACK
2. FINISHES: 2.50µM TIN OVER 1.25µM NICKEL UNDERPLATE
3. PRODUCT SPECIFICATION: PS-78788-001
4. PACKAGING SPECIFICATION: SEE TABLE
5. MATES WITH: 87758, 87759, 87760, 87831, 87832, 87833
6. MOLEX LOGO AND CAVITY ID IS LOCATED APPROXIMATELY AS SHOWN
7. FOR ILLUSTRATION, 8 CIRCUITS IS SHOWN
8. CIRCUIT NUMBERS ARE COUNTED FROM LEFT TO RIGHT ON TOP VIEW WITH RECESSED GATE ALWAYS ON THE RIGHT
9. SEE SHEET 2 FOR CIRCUIT SIZE PART NUMBER & DIMENSIONS
10. MEASUREMENT IS TAKEN BETWEEN THE TANGENT OF THE TOE TO TIP OF THE TERMINAL

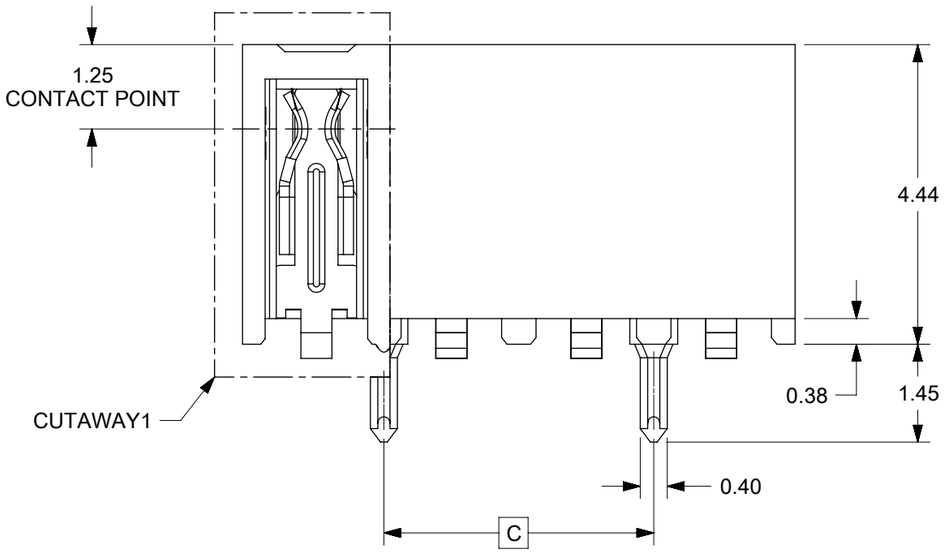

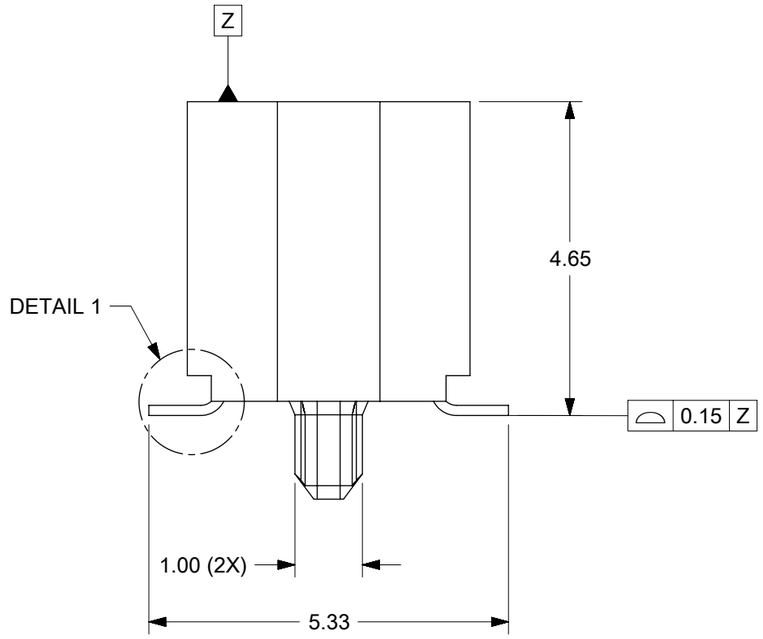

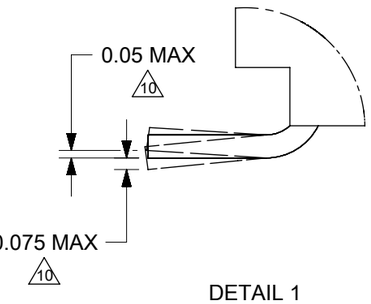

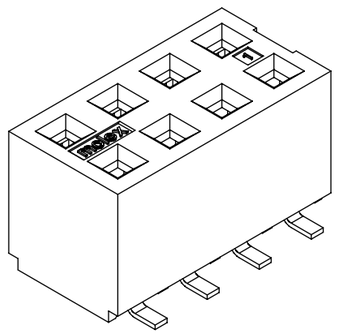

THIS DRAWING CONTAINS INFORMATION THAT IS PROPRIETARY TO MOLEX ELECTRONIC TECHNOLOGIES, LLC AND SHOULD NOT BE USED WITHOUT WRITTEN PERMISSION

DIMENSION UNITS	SCALE
mm	NTS

GENERAL TOLERANCES (UNLESS SPECIFIED)

	MM	INCH
4 PLACES	±	±
3 PLACES	±	±
2 PLACES	± 0.25	±
1 PLACE	±	±
0 PLACES	±	±
ANGULAR TOL	± 3.0 °	

DRAFT WHERE APPLICABLE MUST REMAIN WITHIN DIMENSIONS

CURRENT REV DESC: CKT POS CHANGE

EC NO:	619055	
DRWN:	HK02	2019/05/15
CHK'D:	NMANE02	2019/07/09
APPR:	MRAMAKRISHNA	2019/07/09
INITIAL REVISION:		
DRWN:	GMENARLY	2012/11/16
APPR:	BOKOK	2013/06/03

THIRD ANGLE PROJECTION | DRAWING: A3-SIZE | SERIES: 78788

molex

SALES DRAWING
2MM DUAL ROW, SMT W/ PEG MILLIGRID VERT RECEPT

PRODUCT CUSTOMER DRAWING

DOCUMENT NUMBER	DOC TYPE	DOC PART	REVISION
SD-78788-001	PSD	001	A3

MATERIAL NUMBER	CUSTOMER	SHEET NUMBER
SEE TABLE	GENERAL MARKET	1 OF 4

DOCUMENT STATUS	P1	RELEASE DATE	2019/07/09 06:46:49

FORMAT: Met-lega-master-tb-prod-A3
REVISION: D
DATE: 2018/01/18

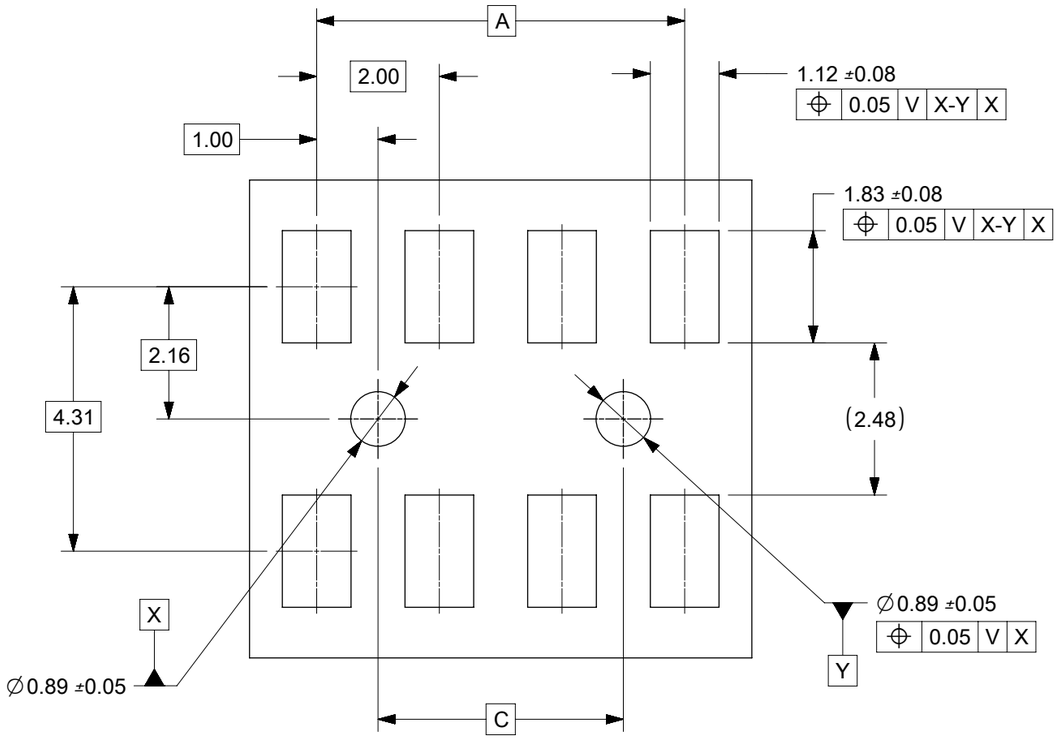

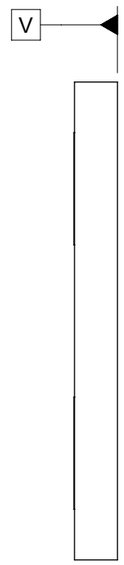

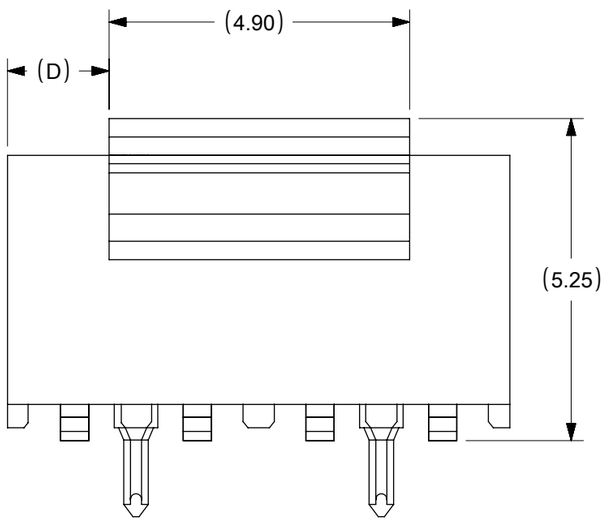

THIS DRAWING CONTAINS INFORMATION THAT IS PROPRIETARY TO MOLEX ELECTRONIC TECHNOLOGIES, LLC AND SHOULD NOT BE USED WITHOUT WRITTEN PERMISSION

DIMENSION UNITS	SCALE
mm	NTS

GENERAL TOLERANCES (UNLESS SPECIFIED)

	MM	INCH
4 PLACES	±	±
3 PLACES	±	±
2 PLACES	± 0.25	±
1 PLACE	±	±
0 PLACES	±	±
ANGULAR TOL	± 3.0 °	

DRAFT WHERE APPLICABLE MUST REMAIN WITHIN DIMENSIONS

CURRENT REV DESC: CKT POS CHANGE

EC NO: 619055
DRWN: HK02 2019/05/15
CHK'D: NMANE02 2019/07/09
APPR: MRAMAKRISHNA 2019/07/09

INITIAL REVISION:
DRWN: GMENARLY 2012/11/16
APPR: BOKOK 2013/06/03

THIRD ANGLE PROJECTION | DRAWING: A3-SIZE | SERIES: 78788

molex

SALES DRAWING
2MM DUAL ROW, SMT W/ PEG MILLIGRID VERT RECEPT

PRODUCT CUSTOMER DRAWING

DOCUMENT NUMBER	DOC TYPE	DOC PART	REVISION
SD-78788-001	PSD	001	A3

MATERIAL NUMBER	CUSTOMER	SHEET NUMBER
SEE TABLE	GENERAL MARKET	2 OF 4

DOCUMENT STATUS	P1	RELEASE DATE	2019/07/09 06:46:49

FORMAT: Met-lega-master-tb-prod-A3
REVISION: D
DATE: 2018/01/18

CIRCUIT NUMBER	PART NUMBER WITH CAP IN T&R	TOOLED	PART NUMBER WITHOUT CAP IN T&R	TOOLED	PART NUMBER WITH CAP IN TUBE	TOOLED	PART NUMBER WITHOUT CAP IN TUBE	TOOLED	DIM A	DIM B	DIM C	DIM D (WITH CAP OPTION)
6	78788-0611	NO	78788-0612	NO	78788-0613		78788-0614		4	6.19	2	0.65
8	78788-0811	YES	78788-0812	YES	78788-0813		78788-0814		6	8.19	4	1.65
10	78788-1011	YES	78788-1012	YES	78788-1013		78788-1014		8	10.19	6	2.65
12	78788-1211	YES	78788-1212	YES	78788-1213		78788-1214		10	12.19	8	3.65
14	78788-1411	YES	78788-1412	YES	78788-1413		78788-1414		12	14.19	10	4.65
16	78788-1611	YES	78788-1612	YES	78788-1613		78788-1614		14	16.19	12	5.65
18	78788-1811	YES	78788-1812	YES	78788-1813		78788-1814		16	18.19	14	6.65
20	78788-2011	YES	78788-2012	YES	78788-2013		78788-2014		18	20.19	16	7.65
22	78788-2211	NO	78788-2212	NO	78788-2213		78788-2214		20	22.19	18	8.65
24	78788-2411	YES	78788-2412	YES	78788-2413		78788-2414		22	24.19	20	9.65
26	78788-2611	NO	78788-2612	NO	78788-2613		78788-2614		24	26.19	22	10.65
28	78788-2811	NO	78788-2812	NO	78788-2813	YES	78788-2814	YES	26	28.19	24	11.65
30	78788-3011	YES	78788-3012	YES	78788-3013		78788-3014		28	30.19	26	12.65
32	78788-3211	NO	78788-3212	NO	78788-3213		78788-3214		30	32.19	28	13.65
34	78788-3411	NO	78788-3412	NO	78788-3413		78788-3414		32	34.19	30	14.65
36	78788-3611	NO	78788-3612	NO	78788-3613		78788-3614		34	36.19	32	15.65
38	78788-3811	NO	78788-3812	NO	78788-3813		78788-3814		36	38.19	34	16.65
40	78788-4011	YES	78788-4012	YES	78788-4013		78788-4014		38	40.19	36	17.65
42	78788-4211	NO	78788-4212	NO	78788-4213		78788-4214		40	42.19	38	18.65
44	78788-4411	NO	78788-4412	NO	78788-4413		78788-4414		42	44.19	40	19.65
46	78788-4611	NO	78788-4612	NO	78788-4613		78788-4614		44	46.19	42	20.65
48	78788-4811	NO	78788-4812	NO	78788-4813		78788-4814		46	48.19	44	21.65
50	78788-5011	YES	78788-5012	YES	78788-5013		78788-5014		48	50.19	46	22.65

PACKAGING SPECIFICATION

PART NUMBER	PACKAGING SPECIFICATION
78788-XX11	PK-78788-001
78788-XX12	PK-78788-002
78788-XX13	PK-78788-003
78788-XX14	PK-78788-004

PART NUMBER LEGEND

78788 - X X X X

CIRCUIT NUMBER

1. WITH PEG

1. CAP IN TAPE & REEL
2. WITHOUT CAP IN TAPE & REEL
3. CAP IN TUBE
4. WITHOUT CAP IN TUBE

THIS DRAWING CONTAINS INFORMATION THAT IS PROPRIETARY TO MOLEX ELECTRONIC TECHNOLOGIES, LLC AND SHOULD NOT BE USED WITHOUT WRITTEN PERMISSION

DIMENSION UNITS	SCALE
mm	NTS

GENERAL TOLERANCES (UNLESS SPECIFIED)

	MM	INCH
4 PLACES	±	±
3 PLACES	±	±
2 PLACES	± 0.25	±
1 PLACE	±	±
0 PLACES	±	±
ANGULAR TOL	± 3.0 °	

DRAFT WHERE APPLICABLE MUST REMAIN WITHIN DIMENSIONS

CURRENT REV DESC: CKT POS CHANGE

EC NO: 619055
DRWN: HK02 2019/05/15
CHK'D: NMANE02 2019/07/09
APPR: MRAMAKRISHNA 2019/07/09

INITIAL REVISION:
DRWN: GMENARLY 2012/11/16
APPR: BOKOK 2013/06/03

THIRD ANGLE PROJECTION | DRAWING: A3-SIZE | SERIES: 78788

molex

SALES DRAWING
2MM DUAL ROW, SMT W/ PEG MILLIGRID VERT RECEPT

PRODUCT CUSTOMER DRAWING

DOCUMENT NUMBER	DOC TYPE	DOC PART	REVISION
SD-78788-001	PSD	001	A3

MATERIAL NUMBER	CUSTOMER	SHEET NUMBER
SEE TABLE	GENERAL MARKET	3 OF 4

DOCUMENT STATUS	P1	RELEASE DATE	2019/07/09 06:46:49

FORMAT: Met-lega-master-tb-prod-A3
REVISION: D
DATE: 2018/01/18

BOARD TO BOARD (BTB) DISTANCE

RECEPTACLE	MATES WITH(HEADER)	BTB DISTANCE	PICTORIAL VIEW
78788	87831	7.15	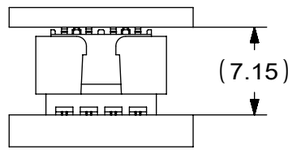
	87832	8.35	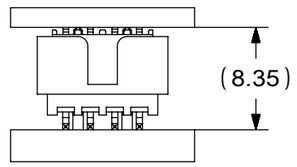
	151117	7.15	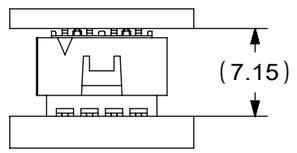
	151118	8.35	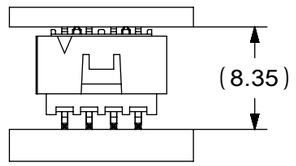

THIS DRAWING CONTAINS INFORMATION THAT IS PROPRIETARY TO MOLEX ELECTRONIC TECHNOLOGIES, LLC AND SHOULD NOT BE USED WITHOUT WRITTEN PERMISSION

DIMENSION UNITS	SCALE
mm	NTS

GENERAL TOLERANCES (UNLESS SPECIFIED)

	MM	INCH
4 PLACES	±	±
3 PLACES	±	±
2 PLACES	± 0.25	±
1 PLACE	±	±
0 PLACES	±	±
ANGULAR TOL	± 3.0 °	

DRAFT WHERE APPLICABLE MUST REMAIN WITHIN DIMENSIONS

CURRENT REV DESC: CKT POS CHANGE

EC NO: 619055
DRWN: HK02 2019/05/15
CHK'D: NMANE02 2019/07/09
APPR: MRAMAKRISHNA 2019/07/09

INITIAL REVISION:
DRWN: DRWN BY XXXX/XX/XX
APPR: APPR BY XXXX/XX/XX

THIRD ANGLE PROJECTION | DRAWING: A3-SIZE | SERIES: 78788

molex

SALES DRAWING
2MM DUAL ROW, SMT W/ PEG MILLIGRID VERT RECEPT

PRODUCT CUSTOMER DRAWING

DOCUMENT NUMBER	DOC TYPE	DOC PART	REVISION
SD-78788-001	PSD	001	A3

MATERIAL NUMBER	CUSTOMER	SHEET NUMBER
	GENERAL MARKET	4 OF 4

DOCUMENT STATUS	P1	RELEASE DATE	2019/07/09 06:46:49

FORMAT: Met-loss-master-tb-prod-A3
REVISION: D
DATE: 2018/01/15