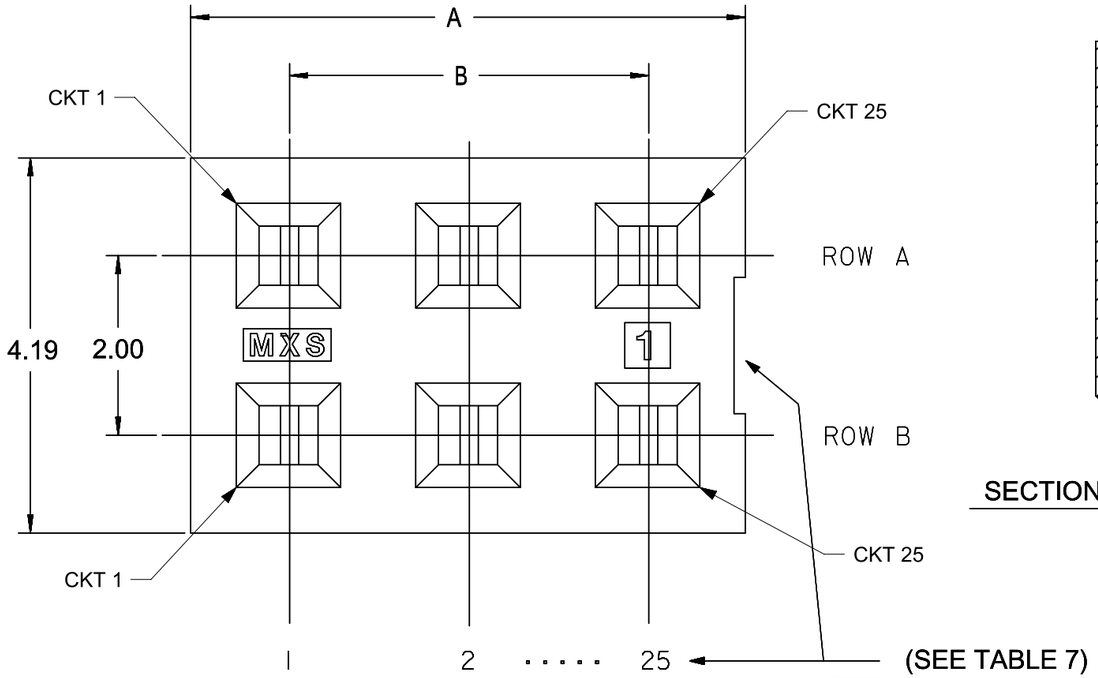

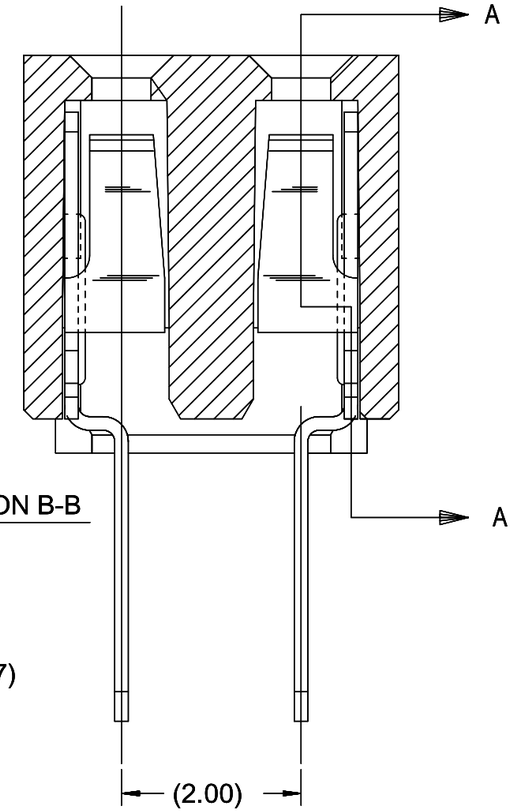

SECTION B-B

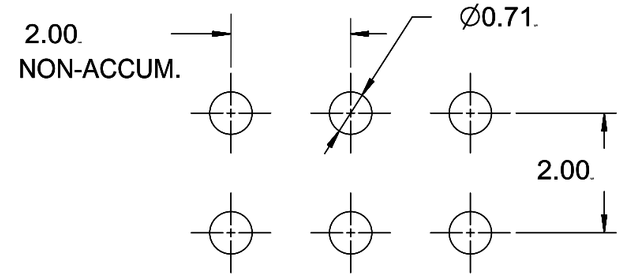

RECOMMENDED PCB LAYOUT

NOTES:
1) HOUSING MATERIAL: GLASS FILLED HIGH TEMP THERMOPLASTIC, COLOR: BLACK
2) TERMINAL MATERIAL: PHOSPHOR BRONZE
3) SEE SHT 2&3 FOR CKT SIZE, PART NUMBERS AND OVERALL DIMENSIONS, SEE SHT 4 FOR VOIDS.
4) FOR ILLUSTRATION, 6 CKT ASSY SHOWN.
5) REFER TO PRODUCT SPEC PS-79107
6) PACKAGING SPECIFICATION:
TUBE: PK-70873-0180
T&R: 791070001
7) CKTS NUMBERED FROM LEFT TO RIGHT WHEN PART IS VIEWED FROM TOP WITH RECESS ON THE RIGHT
8) SOLDERTAIL TO BE MEASURED BY PITCH GAUGE.

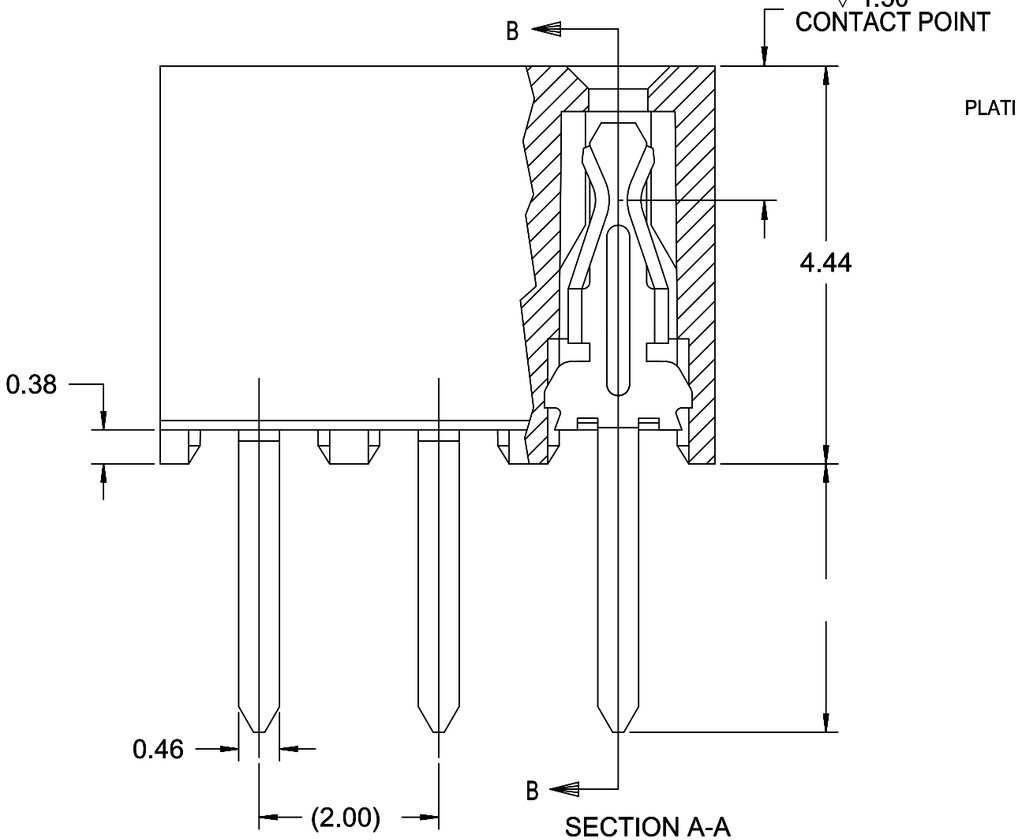

SECTION A-A

PLATING OPTION:

PLATING OPTIONS:
4 - 0.76µM MIN. GOLD PLATE IN SELECTED AREA
1.90µM MIN. TIN PLATE IN SELECTED AREA
OVER 1.25µM MIN. NICKEL OVERALL
5 - 0.38µM MIN. GOLD PLATE IN SELECTED AREA
1.90µM MIN. TIN PLATE IN SELECTED AREA
OVER 1.25µM MIN. NICKEL OVERALL
6 - 0.05µM MIN. GOLD PLATE IN SELECTED AREA
1.02µM MIN. TIN PLATE IN SELECTED AREA
OVER 1.02µM MIN. NICKEL OVERALL

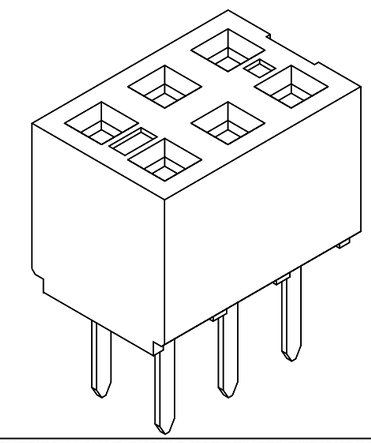

RELEASE STATUS	P1	RELEASE DATE	2018/03/23 06:07:23

QUALITY SYMBOLS: = 0 / = 0 / = 1 / = 0 / = 0 / = 0 / = 0 / = 0

SHT3: ADD 79107-7417
EC NO: 173923 2017/11/27
DRWN: GMENARLY 2018/03/23
CHK'D: ISHWARG 2018/03/23
APPR: ISHWARG
H4 REV

GENERAL TOLERANCES (UNLESS SPECIFIED)
ANGULAR TOL ± 0.5 °
4 PLACES ±
3 PLACES ±
2 PLACES ± 0.25
1 PLACE ±
0 PLACES ±
DRAFT WHERE APPLICABLE MUST REMAIN WITHIN DIMENSIONS

DIMENSION UNITS: MM
SCALE: NTS
DRWN BY: AAB DATE: 1989/05/15
CHK'D BY: MJM DATE: 1989/05/15
APPR BY: WAZ DATE: 1989/05/15
DRAWING SIZE: B
THIRD ANGLE PROJECTION

THIS DRAWING CONTAINS INFORMATION THAT IS PROPRIETARY TO MOLEX ELECTRONIC TECHNOLOGIES, LLC AND SHOULD NOT BE USED WITHOUT WRITTEN PERMISSION

molex®

2MM DUAL ROW
VERTICAL RECEPTACLE T/H

PRODUCT CUSTOMER DRAWING

SERIES	MATERIAL NUMBER	CUSTOMER
79107	SEE TABLE	GENERAL MARKET

DOCUMENT NUMBER	DOC TYPE	DOC PART	SHEET NUMBER
SDA-79107-++++	PSD	001	1 OF 4

FORMAT: master-tb-prod-B
REVISION: G
DATE: 2017/02/06

ASSEMBLY WITHOUT CAP IN TUBE

CKT SIZE	DIM A	DIM B	PC TAIL DIMENSION "C" = 3.00			PC TAIL DIMENSION "C" = 1.90		
			PLATING OPTION: 5	PLATING OPTION: 4	PLATING OPTION: 6	PLATING OPTION: 5	PLATING OPTION: 4	PLATING OPTION: 6
04	4.19	2.00	79107-7001	79107-7051	X 79107-7126	79107-7201	79107-7251	X 79107-7326
06	6.19	4.00	79107-7002	79107-7052	X 79107-7127	79107-7202	79107-7252	X 79107-7327
08	8.19	6.00	79107-7003	79107-7053	X 79107-7128	79107-7203	79107-7253	X 79107-7328
10	10.19	8.00	79107-7004	79107-7054	X 79107-7129	79107-7204	79107-7254	X 79107-7329
12	12.19	10.00	79107-7005	79107-7055	79107-7130	79107-7205	79107-7255	79107-7330
14	14.19	12.00	79107-7006	79107-7056	X 79107-7131	79107-7206	79107-7256	X 79107-7331
16	16.19	14.00	79107-7007	79107-7057	X 79107-7132	79107-7207	79107-7257	X 79107-7332
18	18.19	16.00	79107-7008	79107-7058	X 79107-7133	79107-7208	79107-7258	X 79107-7333
20	20.19	18.00	79107-7009	79107-7059	X 79107-7134	79107-7209	79107-7259	X 79107-7334
22	22.19	20.00	79107-7010	79107-7060	X 79107-7135	79107-7210	79107-7260	X 79107-7335
24	24.19	22.00	79107-7011	79107-7061	X 79107-7136	79107-7211	79107-7261	X 79107-7336
26	26.19	24.00	79107-7012	79107-7062	X 79107-7137	79107-7212	79107-7262	X 79107-7337
28	28.19	26.00	79107-7013	79107-7063	X 79107-7138	79107-7213	79107-7263	X 79107-7338
30	30.19	28.00	79107-7014	79107-7064	X 79107-7139	79107-7214	79107-7264	X 79107-7339
32	32.19	30.00	79107-7015	79107-7065	X 79107-7140	79107-7215	79107-7265	X 79107-7340
34	34.19	32.00	79107-7016	79107-7066	X 79107-7141	79107-7216	79107-7266	X 79107-7341
36	36.19	34.00	79107-7017	79107-7067	X 79107-7142	79107-7217	79107-7267	X 79107-7342
38	38.19	36.00	79107-7018	79107-7068	X 79107-7143	79107-7218	79107-7268	X 79107-7343
40	40.19	38.00	79107-7019	79107-7069	X 79107-7144	79107-7219	79107-7269	X 79107-7344
42	42.19	40.00	79107-7020	79107-7070	X 79107-7145	79107-7220	79107-7270	X 79107-7345
44	44.19	42.00	79107-7021	79107-7071	X 79107-7146	79107-7221	79107-7271	X 79107-7346
46	46.19	44.00	79107-7022	79107-7072	X 79107-7147	79107-7222	79107-7272	X 79107-7347
48	48.19	46.00	79107-7023	79107-7073	X 79107-7148	79107-7223	79107-7273	X 79107-7348
50	50.19	48.00	79107-7024	79107-7074	X 79107-7149	79107-7224	79107-7274	X 79107-7349

QUALITY SYMBOLS

FA = 0
FC = 0
FP = 0
▼ = 0
C = 0
☒ = 0
■ = 0
C = 0

THIS DRAWING CONTAINS INFORMATION THAT IS PROPRIETARY TO MOLEX ELECTRONIC TECHNOLOGIES, LLC AND SHOULD NOT BE USED WITHOUT WRITTEN PERMISSION

SHT3: ADD 79107-7417
EC NO: 173923 2017/11/27
DRWN: GMENARLY 2018/03/23
CHK'D: ISHWARG 2018/03/23
APPR: ISHWARG
REV H4

GENERAL TOLERANCES (UNLESS SPECIFIED)
ANGULAR TOL ± 0.5 °
4 PLACES ±
3 PLACES ±
2 PLACES ± 0.25
1 PLACE ±
0 PLACES ±
DRAFT WHERE APPLICABLE MUST REMAIN WITHIN DIMENSIONS

DIMENSION UNITS: MM
SCALE: NTS
DRWN BY: AAB DATE: 1989/05/15
CHK'D BY: MJM DATE: 1989/05/15
APPR BY: WAZ DATE: 1989/05/15
DRAWING SIZE: A3
THIRD ANGLE PROJECTION

molex®

2MM DUAL ROW
VERTICAL RECEPTACLE T/H

PRODUCT CUSTOMER DRAWING

SERIES	MATERIAL NUMBER	CUSTOMER
79107	SEE TABLE	GENERAL MARKET

DOCUMENT NUMBER	DOC TYPE	DOC PART	SHEET NUMBER
SDA-79107-++++	PSD	001	2 OF 4

RELEASE STATUS	P1	RELEASE DATE	2018/03/23 06:07:23

FORMAT: master-tb-prod-A3
REVISION: G
DATE: 2017/02/06

ASSEMBLY WITH CAP IN TAPE & REEL

CKT SIZE	ASSEMBLY PART NO	DIM A	DIM B	DIM C	DIM D	PLATING OPTION
36	79107-7417	36.19	34.00	3.00	15.65	5

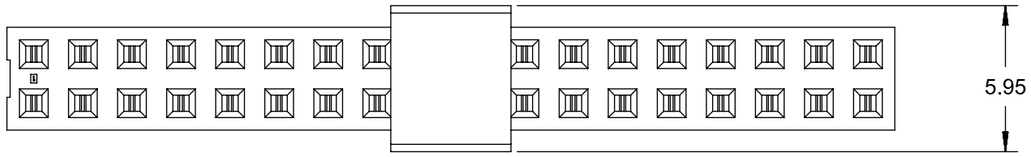

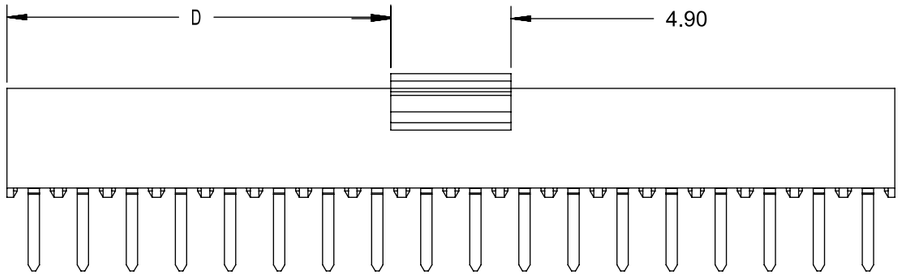

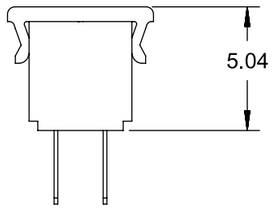

QUALITY SYMBOLS	
FA	= 0
FC	= 0
FP	= 0
▼	= 0
C	= 0
☒	= 0
■	= 0
C	= 0

THIS DRAWING CONTAINS INFORMATION THAT IS PROPRIETARY TO MOLEX ELECTRONIC TECHNOLOGIES, LLC AND SHOULD NOT BE USED WITHOUT WRITTEN PERMISSION

SHT3: ADD 79107-7417
EC NO: 173923 2017/11/27
DRWN: GMENARLY 2018/03/23
CHK'D: ISHWARG 2018/03/23
APPR: ISHWARG

H4 REV

GENERAL TOLERANCES (UNLESS SPECIFIED)

ANGULAR TOL ±	0.5	°
4 PLACES	±	
3 PLACES	±	
2 PLACES	±	0.25
1 PLACE	±	
0 PLACES	±	

DRAFT WHERE APPLICABLE MUST REMAIN WITHIN DIMENSIONS

DIMENSION UNITS	MM
SCALE	NTS
DRWN BY	AAB
DATE	1989/05/15
CHK'D BY	MJM
DATE	1989/05/15
APPR BY	WAZ
DATE	1989/05/15
DRAWING SIZE	A3
THIRD ANGLE PROJECTION	

molex®

2MM DUAL ROW
VERTICAL RECEPTACLE T/H

PRODUCT CUSTOMER DRAWING

SERIES	MATERIAL NUMBER	CUSTOMER
79107	SEE TABLE	GENERAL MARKET

DOCUMENT NUMBER	DOC TYPE	DOC PART	SHEET NUMBER
SDA-79107-++++	PSD	001	3 OF 4

RELEASE STATUS	P1	RELEASE DATE	2018/03/23 06:07:23

FORMAT: master-lb-prod-A3
REVISION: G
DATE: 2017/02/06

MOLDED VOID OPTION
ASSEMBLIES WITHOUT PEGS

CKT SIZE	ASSEMBLY	HOUSING		VOID LOCATION(S) SEE SHEET 1 FOR CONVENTION		TERMINAL		PLATING OPTIONS	DIM A	DIM B	DIM C PC TAIL
		EDP NO.	ENG. NO	ROW	CKT. NO. (S)	EDP NO.	ENG. NO				
24	79107-5101	050-40-1422	79105-0501	ROW B	6	791061012	79106-1012	5	24.19	22.00	3.00
10	79107-5102	050-40-1410	79105-0504	ROW A	5	791061012	79106-1012	5	10.19	8.00	3.00
26	79107-5103	050-40-1426	79105-0505	ROW B	5	791061012	79106-1012	5	26.19	24.00	3.00
20	79107-5104	79105-0510	79105-0510	ROW A	7	791061112	79106-1112	5	20.19	18.00	1.91
24	79107-5105	79105-0511	79105-0511	ROW B	10	791061112	79106-1112	5	24.19	22.00	1.91
20	79107-5106	79105-0510	79105-0510	ROW A	7	791061012	79106-1012	5	20.19	18.00	3.00
24	79107-5107	79105-0511	79105-0511	ROW B	10	791061012	79106-1012	5	24.19	22.00	3.00

NOTES:
1. TERMINALS WILL BE PRESENT IN VOIDED LOCATIONS. HOWEVER, PIN WINDOWS WILL BE CLOSED
2. VOIDS CAN ONLY BE PRESENT IN ONE ROW OF A CONNECTOR

QUALITY SYMBOLS
EA = 0
EC = 0
ED = 0
▼ = 0
C = 0
☒ = 0
■ = 0
F = 0

EC NO: 173923 SHT3: ADD 79107-7417
DRWN: GMENARLY 2017/11/27
CHK'D: ISHWARG 2018/03/23
APPR: ISHWARG 2018/03/23
H4 REV

GENERAL TOLERANCES (UNLESS SPECIFIED)
ANGULAR TOL ± 0.5 °
4 PLACES ±
3 PLACES ±
2 PLACES ± 0.25
1 PLACE ±
0 PLACES ±
DRAFT WHERE APPLICABLE MUST REMAIN WITHIN DIMENSIONS

DIMENSION UNITS: MM
SCALE: NTS
DRWN BY: AAB DATE: 1989/05/15
CHK'D BY: MJM DATE: 1989/05/15
APPR BY: WAZ DATE: 1989/05/15
DRAWING SIZE: A3
THIRD ANGLE PROJECTION

THIS DRAWING CONTAINS INFORMATION THAT IS PROPRIETARY TO MOLEX ELECTRONIC TECHNOLOGIES, LLC AND SHOULD NOT BE USED WITHOUT WRITTEN PERMISSION

molex®

2MM DUAL ROW
VERTICAL RECEPTACLE T/H

PRODUCT CUSTOMER DRAWING

SERIES	MATERIAL NUMBER	CUSTOMER
79107	SEE TABLE	GENERAL MARKET

DOCUMENT NUMBER	DOC TYPE	DOC PART	SHEET NUMBER
SDA-79107-++++	PSD	001	4 OF 4

RELEASE STATUS	P1	RELEASE DATE	2018/03/23 06:07:23

FORMAT: master-tb-prod-A3
REVISION: G
DATE: 2017/02/06

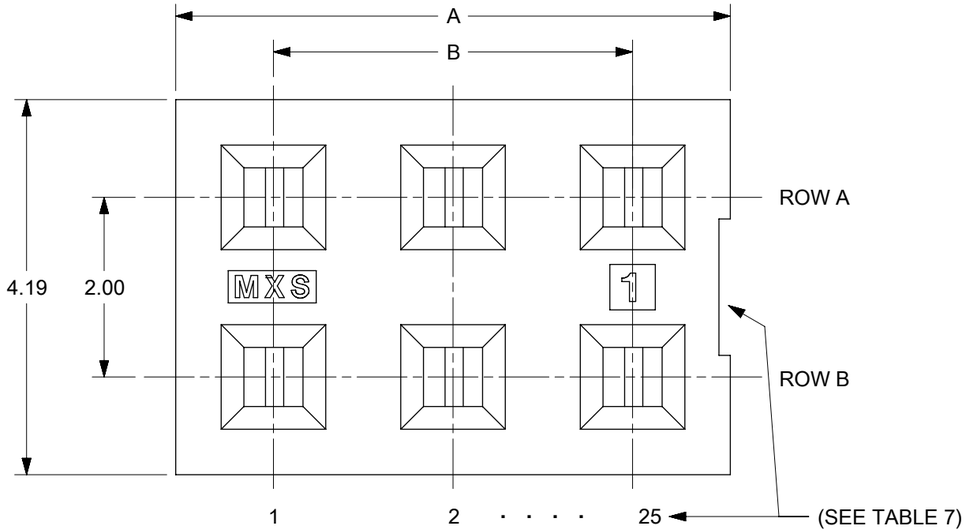

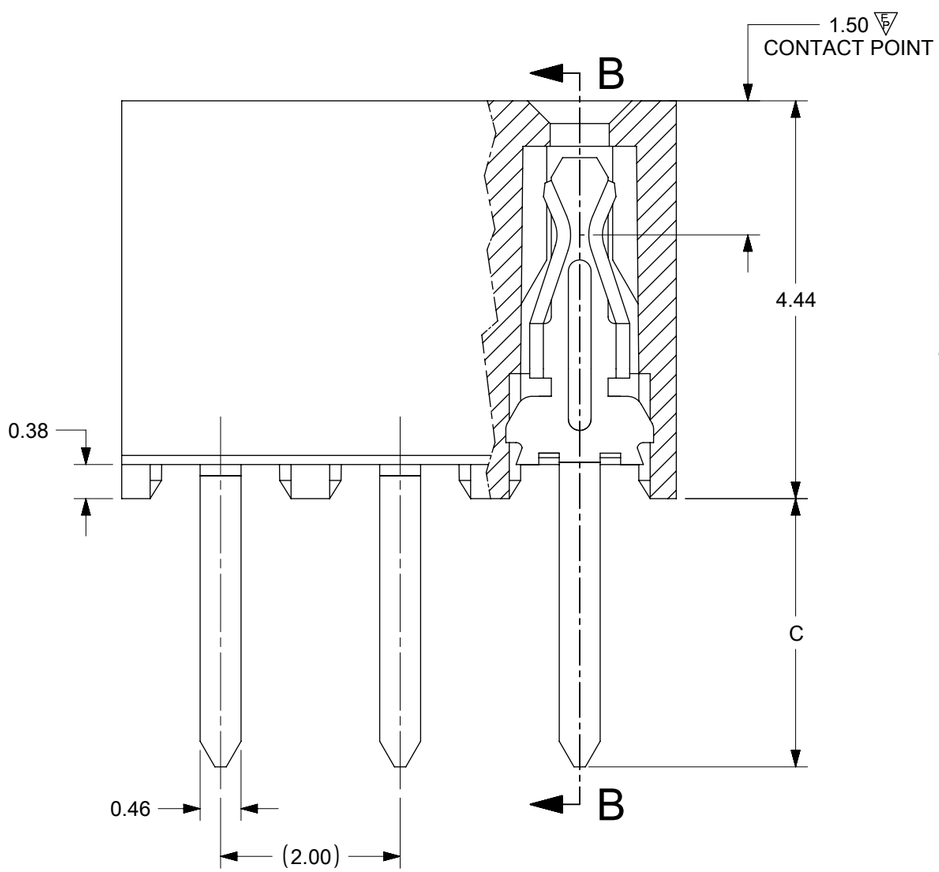

SECTION A-A

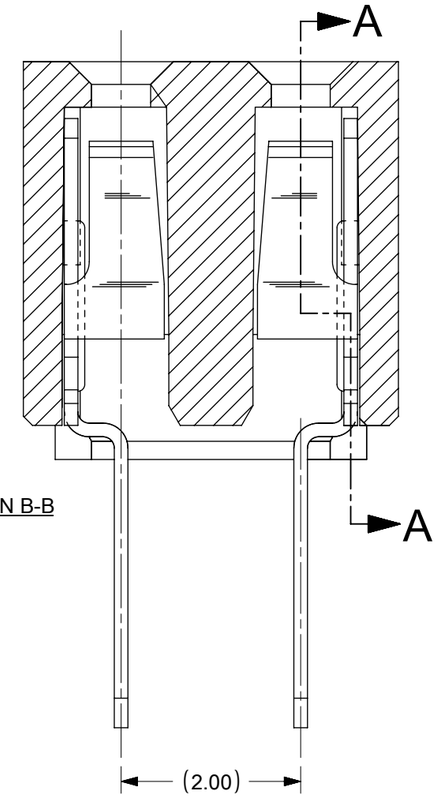

SECTION B-B

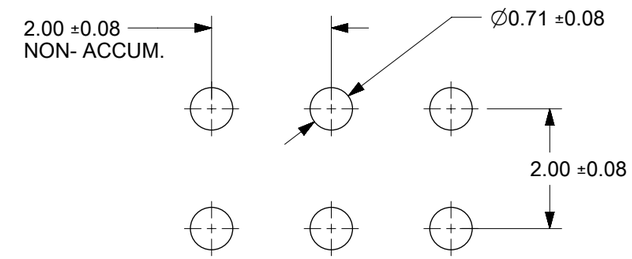

RECOMMENDED PCB LAYOUT

NOTES:
1) HOUSING MATERIAL: GLASS FILLED HIGH TEMP THERMOPLASTIC, COLOR: BLACK, UL-94V-0
2) TERMINAL MATERIAL: PHOSPHOR BRONZE
3) SEE SHT 2 FOR CKT SIZE, PART NUMBERS AND OVERALL DIMENSIONS, SEE SHT 3 FOR VOIDS.
4) FOR ILLUSTRATION, 6 CKT ASSY SHOWN.
5) REFER TO PRODUCT SPEC PS-79107
6) PACKAGING PER PK-70873-0180
7) CKTS NUMBERED FROM LEFT TO RIGHT WHEN PART IS VIEWED FROM TOP WITH RECESS ON THE RIGHT AS SHOWN.
8) SOLDERTAIL TO BE MEASURED BY PITCH GAUGE.

PLATING OPTION:

4) - 30µ"/0.76µm MIN GOLD PLATE IN SELECTED AREA
75µ"/1.90µm MIN TIN PLATE IN SELECTED AREA
BOTH OVER 50µ"/1.25µm MIN NICKEL OVERALL
5) - 15µ"/0.38µm MIN GOLD PLATE IN SELECTED AREA
75µ"/1.90µm MIN TIN PLATE IN SELECTED AREA
BOTH OVER 50µ"/1.25µm MIN NICKEL OVERALL
6) - 2µ"/0.05µm MIN GOLD PLATE IN SELECTED AREA
40µ"/1.02µm MIN TIN PLATE IN SELECTED AREA
BOTH OVER 40µ"/1.02µm MIN NICKEL OVERALL

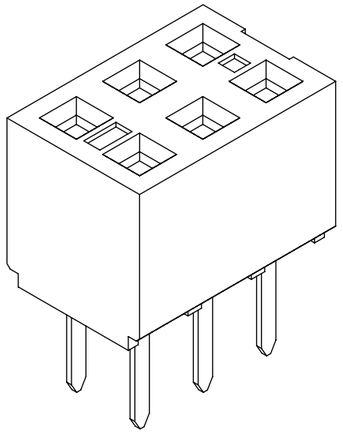

THIS DRAWING CONTAINS INFORMATION THAT IS PROPRIETARY TO MOLEX ELECTRONIC TECHNOLOGIES, LLC AND SHOULD NOT BE USED WITHOUT WRITTEN PERMISSION

SYMBOLS	
E = 0	
E = 0	
E = 1	
S = 0	
▼ = 0	
C = 0	
☒ = 0	
■ = 0	
V = 0	

DIMENSION UNITS	SCALE
mm	NTS
GENERAL TOLERANCES (UNLESS SPECIFIED)	
ANGULAR TOL ± 0.5 °	
4 PLACES	±
3 PLACES	±
2 PLACES	± 0.25
1 PLACE	±
0 PLACES	±
DRAFT WHERE APPLICABLE MUST REMAIN WITHIN DIMENSIONS	

CURRENT REV DESC:

EC NO: 674390
DRWN: ABABUPS 2021/06/03
CHK'D: MRAMAKRISHNA 2021/08/23
APPR: MRAMAKRISHNA 2021/08/23

INITIAL REVISION:
DRWN: RFC_PLMIMP 2018/12/04
APPR: KCLING 2001/08/22

THIRD ANGLE PROJECTION | DRAWING: B-SIZE | SERIES: 79107

molex

2MM DUAL ROW
VERTICAL RECEPTACLE T/H

PRODUCT CUSTOMER DRAWING

DOCUMENT NUMBER	DOC TYPE	DOC PART	REVISION
SDA-79107-XXXX	PSD	001	H5

MATERIAL NUMBER	CUSTOMER	SHEET NUMBER
SEE TABLE	GENERAL MARKET	1 OF 4

DOCUMENT STATUS	P1	RELEASE DATE	2021/08/23 07:55:07

FORMAT: master-tb-portrait
REVISION: H
DATE: 2018/01/18

PARTS PACKED IN TUBE

CKT SIZE	DIM 'A'	DIM 'B'	P.C.TAIL DIMENSION 'C' = 3.00						P.C.TAIL DIMENSION 'C' = 1.91					
			PLATING OPTION 5		PLATING OPTION 4		PLATING OPTION 6		PLATING OPTION 5		PLATING OPTION 4			PLATING OPTION 6
			ITEM NO.		ITEM NO.		ITEM NO.		ITEM NO.		ITEM NO.			ITEM NO.
04	(4.19)	(2.00)		79107-7001		79107-7051	X	79107-7126		79107-7201		79107-7251	X	79107-7326
06	(6.19)	(4.00)		79107-7002		79107-7052	X	79107-7127		79107-7202		79107-7252	X	79107-7327
08	(8.19)	(6.00)		79107-7003		79107-7053	X	79107-7128		79107-7203		79107-7253	X	79107-7328
10	(10.19)	(8.00)		79107-7004		79107-7054	X	79107-7129		79107-7204		79107-7254	X	79107-7329
12	(12.19)	(10.00)		79107-7005		79107-7055		79107-7130		79107-7205		79107-7255		79107-7330
14	(14.19)	(12.00)		79107-7006		79107-7056	X	79107-7131		79107-7206		79107-7256	X	79107-7331
16	(16.19)	(14.00)		79107-7007		79107-7057	X	79107-7132		79107-7207		79107-7257	X	79107-7332
18	(18.19)	(16.00)		79107-7008		79107-7058	X	79107-7133		79107-7208		79107-7258	X	79107-7333
20	(20.19)	(18.00)		79107-7009		79107-7059	X	79107-7134		79107-7209		79107-7259	X	79107-7334
22	(22.19)	(20.00)		79107-7010		79107-7060	X	79107-7135		79107-7210		79107-7260	X	79107-7335
24	(24.19)	(22.00)		79107-7011		79107-7061	X	79107-7136		79107-7211		79107-7261	X	79107-7336
26	(26.19)	(24.00)		79107-7012		79107-7062	X	79107-7137		79107-7212		79107-7262	X	79107-7337
28	(28.19)	(26.00)		79107-7013		79107-7063	X	79107-7138		79107-7213		79107-7263	X	79107-7338
30	(30.19)	(28.00)		79107-7014		79107-7064	X	79107-7139		79107-7214		79107-7264	X	79107-7339
32	(32.19)	(30.00)		79107-7015		79107-7065	X	79107-7140		79107-7215		79107-7265	X	79107-7340
34	(34.19)	(32.00)		79107-7016		79107-7066	X	79107-7141		79107-7216		79107-7266	X	79107-7341
36	(36.19)	(34.00)		79107-7017		79107-7067	X	79107-7142		79107-7217		79107-7267	X	79107-7342
38	(38.19)	(36.00)		79107-7018		79107-7068	X	79107-7143		79107-7218		79107-7268	X	79107-7343
40	(40.19)	(38.00)		79107-7019		79107-7069	X	79107-7144		79107-7219		79107-7269	X	79107-7344
42	(42.19)	(40.00)		79107-7020		79107-7070	X	79107-7145		79107-7220		79107-7270	X	79107-7345
44	(44.19)	(42.00)		79107-7021		79107-7071	X	79107-7146		79107-7221		79107-7271	X	79107-7346
46	(46.19)	(44.00)		79107-7022		79107-7072	X	79107-7147		79107-7222		79107-7272	X	79107-7347
48	(48.19)	(46.00)		79107-7023		79107-7073	X	79107-7148		79107-7223		79107-7273	X	79107-7348
50	(50.19)	(48.00)		79107-7024		79107-7074	X	79107-7149		79107-7224		79107-7274	X	79107-7349

"X" - DENOTES THE ITEM IS NOT AVAILABLE CURRENTLY.

SYMBOLS	
A	= 0
E	= 0
B	= 0
S	= 0
▼	= 0
C	= 0
☒	= 0
■	= 0
▽	= 0

THIS DRAWING CONTAINS INFORMATION THAT IS PROPRIETARY TO MOLEX ELECTRONIC TECHNOLOGIES, LLC AND SHOULD NOT BE USED WITHOUT WRITTEN PERMISSION

DIMENSION UNITS	SCALE
mm	NTS

GENERAL TOLERANCES (UNLESS SPECIFIED)

ANGULAR TOL	± 0.5 °
4 PLACES	±
3 PLACES	±
2 PLACES	± 0.25
1 PLACE	±
0 PLACES	±

DRAFT WHERE APPLICABLE MUST REMAIN WITHIN DIMENSIONS

CURRENT REV DESC:

EC NO: 674390
DRWN: ABABUPS 2021/06/03
CHK'D: MRAMAKRISHNA 2021/08/23
APPR: MRAMAKRISHNA 2021/08/23

INITIAL REVISION:
DRWN: RFC_PLMIMP 2018/12/04
APPR: KCLING 2001/08/22

THIRD ANGLE PROJECTION | DRAWING: B-SIZE | SERIES: 79107

molex

2MM DUAL ROW
VERTICAL RECEPTACLE T/H

PRODUCT CUSTOMER DRAWING

DOCUMENT NUMBER	DOC TYPE	DOC PART	REVISION
SDA-79107-XXXX	PSD	001	H5

MATERIAL NUMBER	CUSTOMER	SHEET NUMBER
SEE TABLE	GENERAL MARKET	2 OF 4

DOCUMENT STATUS	P1	RELEASE DATE	2021/08/23 07:55:07

FORMAT: master-B-portrait
REVISION: H
DATE: 2018/01/18

PARTS PACKED IN TUBE

MOLDED VOID OPTION
ASSEMBLIES WITHOUT PEGS

CKT. SIZE	ASSEMBLY ITEM NO.	VOID LOCATION(S) SEE SHEET 1 FOR CONVENTION ROW	CKT.NO(s)	PLATING OPTION	DIM. "A"	DIM. "B"	P.C. TAIL DIM. "C"
24	79107-5101	ROW B	6	5	(24.19)	(22.00)	(3.00)
10	79107-5102	ROW A	5	5	(10.19)	(8.00)	(3.00)
26	79107-5103	ROW B	5	5	(26.19)	(24.00)	(3.00)
20	79107-5104	ROW A	7	5	(20.19)	(18.00)	(1.91)
24	79107-5105	ROW B	10	5	(24.19)	(22.00)	(1.91)
20	79107-5106	ROW A	7	5	(20.19)	(18.00)	(3.00)
24	79107-5107	ROW B	10	5	(24.19)	(22.00)	(3.00)

"X" - DENOTES THE ITEM IS NOT AVAILABLE CURRENTLY.

NOTES:
1. TERMINALS WILL BE PRESENT IN VOIDED LOCATIONS HOWEVER, PIN WINDOWS WILL BE CLOSED.
2. VOIDS CANNOT BE PRESENT IN BOTH ROWS ON A CONNECTOR.

THIS DRAWING CONTAINS INFORMATION THAT IS PROPRIETARY TO MOLEX ELECTRONIC TECHNOLOGIES, LLC AND SHOULD NOT BE USED WITHOUT WRITTEN PERMISSION

SYMBOLS: = 0 (A), = 0 (C), = 0 (B), = 0 (S), = 0, = 0 (C), = 0, = 0, = 0, = 0 (D)

DIMENSION UNITS: mm
SCALE: NTS

GENERAL TOLERANCES (UNLESS SPECIFIED)
ANGULAR TOL ± 0.5 °
4 PLACES ±
3 PLACES ±
2 PLACES ± 0.25
1 PLACE ±
0 PLACES ±

DRAFT WHERE APPLICABLE MUST REMAIN WITHIN DIMENSIONS

CURRENT REV DESC:

EC NO: 674390
DRWN: ABABUPS 2021/06/03
CHK'D: MRAMAKRISHNA 2021/08/23
APPR: MRAMAKRISHNA 2021/08/23

INITIAL REVISION:
DRWN: RFC_PLMIMP 2018/12/04
APPR: KCLING 2001/08/22

THIRD ANGLE PROJECTION
DRAWING: B-SIZE
SERIES: 79107

molex

2MM DUAL ROW
VERTICAL RECEPTACLE T/H

PRODUCT CUSTOMER DRAWING

DOCUMENT NUMBER	DOC TYPE	DOC PART	REVISION
SDA-79107-XXXX	PSD	001	H5

MATERIAL NUMBER	CUSTOMER	SHEET NUMBER
SEE TABLE	GENERAL MARKET	3 OF 4

DOCUMENT STATUS	P1	RELEASE DATE	2021/08/23 07:55:07

FORMAT: master-B-portrait
REVISION: H
DATE: 2018/01/18

PARTS PACKED IN TAPE AND REEL

CKT SIZE	DIM 'A'	DIM 'B'	P.C.TAIL DIMENSION 'C' = 3.00						P.C.TAIL DIMENSION 'C' = 1.91					
			PLATING OPTION 5		PLATING OPTION 4		PLATING OPTION 6		PLATING OPTION 5		PLATING OPTION 4			PLATING OPTION 6
				ITEM NO.		ITEM NO.		ITEM NO.		ITEM NO.		ITEM NO.		ITEM NO.
04	(4.19)	(2.00)		-		-		-		-		-		-
06	(6.19)	(4.00)		-		-		-		-		-		-
08	(8.19)	(6.00)		-		-		-		-		-		-
10	(10.19)	(8.00)		-		-		-		-		-		-
12	(12.19)	(10.00)		-		-		-		-		-		-
14	(14.19)	(12.00)		-		-		-		-		-		-
16	(16.19)	(14.00)		-		-		-		-		-		-
18	(18.19)	(16.00)		-		-		-		-		-		-
20	(20.19)	(18.00)		-		-		-	*	79107-8209 H5		-		-
22	(22.19)	(20.00)		-		-		-		-		-		-
24	(24.19)	(22.00)		-		-		-		-		-		-
26	(26.19)	(24.00)		-		-		-		-		-		-
28	(28.19)	(26.00)		-		-		-		-		-		-
30	(30.19)	(28.00)		-		-		-		-		-		-
32	(32.19)	(30.00)		-		-		-		-		-		-
34	(34.19)	(32.00)		-		-		-		-		-		-
36	(36.19)	(34.00)		-		-		-		-		-		-
38	(38.19)	(36.00)		-		-		-		-		-		-
40	(40.19)	(38.00)		-		-		-		-		-		-
42	(42.19)	(40.00)		-		-		-		-		-		-
44	(44.19)	(42.00)		-		-		-		-		-		-
46	(46.19)	(44.00)		-		-		-		-		-		-
48	(48.19)	(46.00)		-		-		-		-		-		-
50	(50.19)	(48.00)		-		-		-		-		-		-
				"*" - PACKAGING IS NOT TOOLED						-				

THIS DRAWING CONTAINS INFORMATION THAT IS PROPRIETARY TO MOLEX ELECTRONIC TECHNOLOGIES, LLC AND SHOULD NOT BE USED WITHOUT WRITTEN PERMISSION

FUNCTIONAL SYMBOLS: FA = 0, FC = 0, FP = 0

DIVISIONAL SYMBOLS

DIMENSION UNITS	SCALE
mm	NTS

GENERAL TOLERANCES (UNLESS SPECIFIED)

ANGULAR TOL	± 0.5 °
4 PLACES	±
3 PLACES	±
2 PLACES	± 0.25
1 PLACE	±
0 PLACES	±

DRAFT WHERE APPLICABLE MUST REMAIN WITHIN DIMENSIONS

CURRENT REV DESC:

EC NO: 674390
DRWN: ABABUPS 2021/06/03
CHK'D: MRAMAKRISHNA 2021/08/23
APPR: MRAMAKRISHNA 2021/08/23

INITIAL REVISION:
DRWN: RFC_PLMIMP 2018/12/04
APPR: KCLING 2001/08/22

THIRD ANGLE PROJECTION | DRAWING: A3-SIZE | SERIES: 79107

molex

2MM DUAL ROW
VERTICAL RECEPTACLE T/H

PRODUCT CUSTOMER DRAWING

DOCUMENT NUMBER	DOC TYPE	DOC PART	REVISION
SDA-79107-XXXX	PSD	001	H5

MATERIAL NUMBER	CUSTOMER	SHEET NUMBER
	GENERAL MARKET	4 OF 4

DOCUMENT STATUS	P1	RELEASE DATE	2021/08/23 07:55:07

FORMAT: master_tmpl-A3
REVISION: J
DATE: 2020/01/14