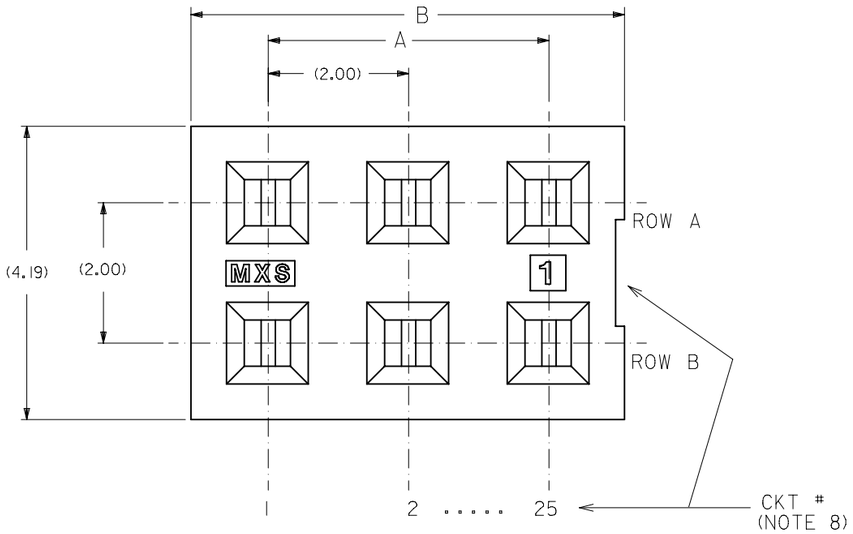

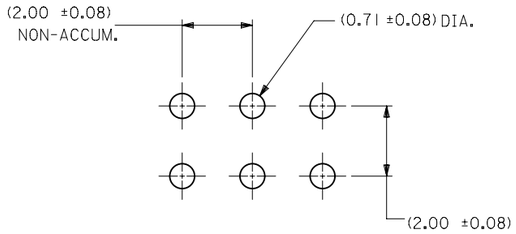

RECOMMENDED P.C. BOARD HOLE LAYOUT

SCALE - 10:1

NOTES:

1 - HOUSING MATERIAL: GLASS FILLED LCP, COLOR: BLACK.
2 - TERMINAL MATERIAL: PHOSPHOR BRONZE
3 - SEE SHEET 2 FOR CIRCUIT SIZE, PART NUMBERS AND OVER-ALL DIMENSIONS.
4 - FOR ILLUSTRATION, 6 CIRCUIT ASSEMBLY SHOWN.
5 - REFER TO PRODUCT SPECIFICATION PS-79107.
6 - PACKAGING PER PK-70873-0180.
7 - SEE SHEET 3 FOR VOIDED ASSEMBLIES.
8 - CKTS. NUMBERED FROM LEFT TO RIGHT WHEN PART IS VIEWED FROM TOP WITH RECESS ON RIGHT AS SHOWN.

PLATING OPTION :

(4) 0.76µm MIN. GOLD PLATE IN SELECTED AREA AND 1.91µm MIN. TIN IN SELECTED AREA OVER 1.27µm MIN. NICKEL OVER-ALL

(5) 0.38µm MIN. GOLD PLATE IN SELECTED AREA AND 1.91µm MIN. TIN IN SELECTED AREA OVER 1.27µm MIN. NICKEL OVER-ALL

(6) 0.13µm MIN. GOLD PLATE IN SELECTED AREA AND 1.91µm MIN. TIN IN SELECTED AREA OVER 1.27µm MIN. NICKEL OVER-ALL

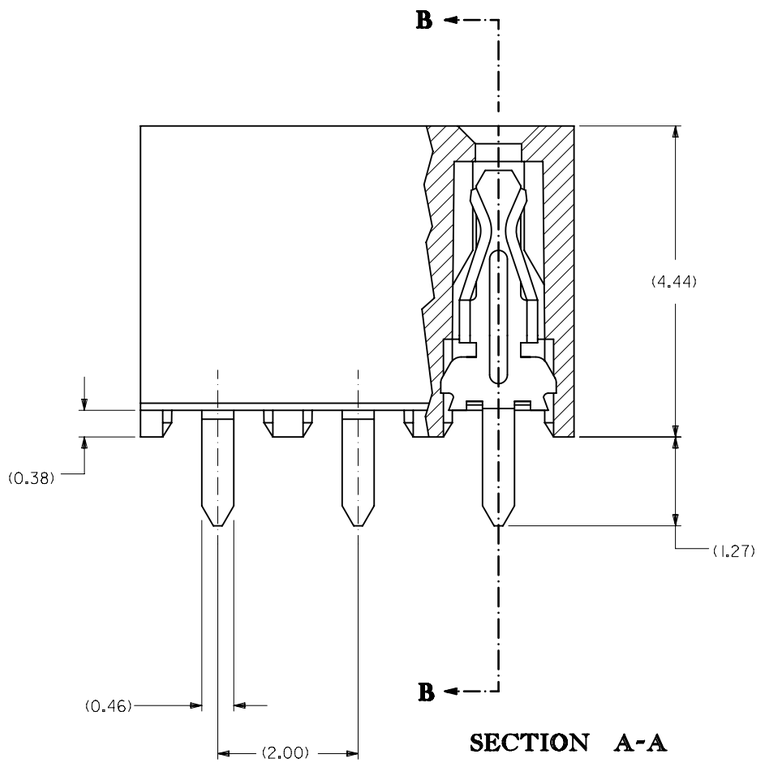

SECTION A-A

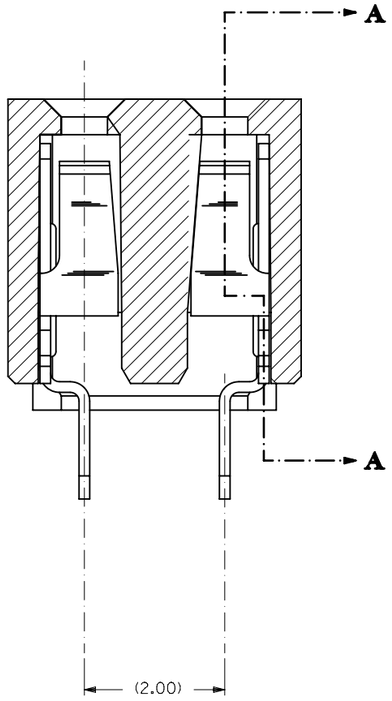

SECTION B-B

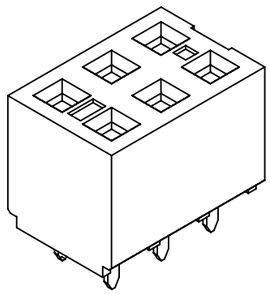

THIS DRAWING CONTAINS INFORMATION THAT IS PROPRIETARY TO MOLEX ELECTRONIC TECHNOLOGIES, LLC AND SHOULD NOT BE USED WITHOUT WRITTEN PERMISSION

DIMENSION UNITS	SCALE
mm	NTS

GENERAL TOLERANCES (UNLESS SPECIFIED)

	MM	INCH
4 PLACES	±	±
3 PLACES	± 0.1	±
2 PLACES	± 0.15	±
1 PLACE	±	±
0 PLACES	±	±
ANGULAR TOL	± 0.5 °	

DRAFT WHERE APPLICABLE MUST REMAIN WITHIN DIMENSIONS

CURRENT REV DESC:

EC NO: 619055
DRWN: VLOKESHA 2019/05/23
CHK'D: NMANE02 2019/07/09
APPR: MRAMAKRISHNA 2019/07/09

INITIAL REVISION:
DRWN: AAB 1998/05/15
APPR: WAZ 1998/05/15

THIRD ANGLE PROJECTION | DRAWING: A3-SIZE | SERIES: 79108

molex

2MM DUAL ROW, FFC
VERTICAL RECEPTACLE

PRODUCT CUSTOMER DRAWING

DOCUMENT NUMBER	DOC TYPE	DOC PART	REVISION
SDA-79108-XXXX	PSD	001	E3

MATERIAL NUMBER	CUSTOMER	SHEET NUMBER
SEE TABLE	GENERAL MARKET	1 OF 5

DOCUMENT STATUS	P1	RELEASE DATE	2019/07/09 06:48:15

FORMAT: Met-Ipea-master-tb-prod-A3
REVISION: D
DATE: 2018/01/15

CKT SIZE	DIM. "A"	DIM. "B"	PLATING OPTION 5		PLATING OPTION 4		PLATING OPTION 6	
			EDP NO.	ENG.NO.	EDP.NO.	ENG.NO.	EDP.NO.	ENG.NO.
04	(2.00)	(4.19)	791081001	79108-1001	791081051	79108-1051	NOT TOOLED	79108-1101
06	(4.00)	(6.19)	791081002	79108-1002	791081052	79108-1052		79108-1102
08	(6.00)	(8.19)	791081003	79108-1003	791081053	79108-1053		79108-1103
10	(8.00)	(10.19)	791081004	79108-1004	791081054	79108-1054		79108-1104
12	(10.00)	(12.19)	791081005	79108-1005	791081055	79108-1055		79108-1105
14	(12.00)	(14.19)	791081006	79108-1006	791081056	79108-1056		79108-1106
16	(14.00)	(16.19)	791081007	79108-1007	791081057	79108-1057		79108-1107
18	(16.00)	(18.19)	791081008	79108-1008	791081058	79108-1058		79108-1108
20	(18.00)	(20.19)	791081009	79108-1009	791081059	79108-1059		79108-1109
22	(20.00)	(22.19)	791081010	79108-1010	791081060	79108-1060		79108-1110
24	(22.00)	(24.19)	791081011	79108-1011	791081061	79108-1061		79108-1111
26	(24.00)	(26.19)	791081012	79108-1012	791081062	79108-1062		79108-1112
28	(26.00)	(28.19)	791081013	79108-1013	791081063	79108-1063		79108-1113
30	(28.00)	(30.19)	791081014	79108-1014	791081064	79108-1064		79108-1114
32	(30.00)	(32.19)	791081015	79108-1015	791081065	79108-1065		79108-1115
34	(32.00)	(34.19)	791081016	79108-1016	791081066	79108-1066		79108-1116
36	(34.00)	(36.19)	791081017	79108-1017	791081067	79108-1067		79108-1117
38	(36.00)	(38.19)	791081018	79108-1018	791081068	79108-1068		79108-1118
40	(38.00)	(40.19)	791081019	79108-1019	791081069	79108-1069		79108-1119
42	(40.00)	(42.19)	791081020	79108-1020	791081070	79108-1070		79108-1120
44	(42.00)	(44.19)	791081021	79108-1021	791081071	79108-1071		79108-1121
46	(44.00)	(46.19)	791081022	79108-1022	791081072	79108-1072		79108-1122
48	(46.00)	(48.19)	791081023	79108-1023	791081073	79108-1073		79108-1123
50	(48.00)	(50.19)	791081024	79108-1024	791081074	79108-1074		79108-1124

THIS DRAWING CONTAINS INFORMATION THAT IS PROPRIETARY TO MOLEX ELECTRONIC TECHNOLOGIES, LLC AND SHOULD NOT BE USED WITHOUT WRITTEN PERMISSION

DIMENSION UNITS: mm | SCALE: NTS

GENERAL TOLERANCES (UNLESS SPECIFIED)

	MM	INCH
4 PLACES	±	±
3 PLACES	± 0.1	±
2 PLACES	± 0.15	±
1 PLACE	±	±
0 PLACES	±	±
ANGULAR TOL	± 0.5 °	

DRAFT WHERE APPLICABLE MUST REMAIN WITHIN DIMENSIONS

CURRENT REV DESC:

EC NO: 619055
DRWN: VLOKESHA 2019/05/23
CHK'D: NMANE02 2019/07/09
APPR: MRAMAKRISHNA 2019/07/09

INITIAL REVISION:
DRWN: AAB 1998/05/15
APPR: WAZ 1998/05/15

THIRD ANGLE PROJECTION | DRAWING: A3-SIZE | SERIES: 79108

molex

2MM DUAL ROW, FFC
VERTICAL RECEPTACLE

PRODUCT CUSTOMER DRAWING

DOCUMENT NUMBER	DOC TYPE	DOC PART	REVISION
SDA-79108-XXXX	PSD	001	E3

MATERIAL NUMBER	CUSTOMER	SHEET NUMBER
SEE TABLE	GENERAL MARKET	2 OF 5

DOCUMENT STATUS	P1	RELEASE DATE	2019/07/09 06:48:15

FORMAT: Mel-spec-letter-lb-prod-A3
REVISION: D
DATE: 2018/01/11

MOLDED VOID OPTION

	ASSEMBLY		VOID LOCATION(S) SEE SHEET 1 FOR CONVENTION		PLATING OPTION	DIM. "A"	DIM. "B"
CKT. SIZE	EDP NO.	ENG. NO.	ROW	CKT. NO.(S)			
44	791085003	79108-5003	ROW A	13	4	(42.00)	(44.19)
44	791085004	79108-5004	ROW B	10	4	(42.00)	(44.19)

NOTES:

1. TERMINALS WILL BE PRESENT IN VOIDED LOCATIONS HOWEVER, PIN WINDOWS WILL BE CLOSED.
2. VOIDS CAN ONLY BE PRESENT IN ONE ROW OF THE CONNECTOR.

THIS DRAWING CONTAINS INFORMATION THAT IS PROPRIETARY TO MOLEX ELECTRONIC TECHNOLOGIES, LLC AND SHOULD NOT BE USED WITHOUT WRITTEN PERMISSION

DIMENSION UNITS	SCALE
mm	NTS

GENERAL TOLERANCES (UNLESS SPECIFIED)	MM	INCH
4 PLACES	±	±
3 PLACES	± 0.1	±
2 PLACES	± 0.15	±
1 PLACE	±	±
0 PLACES	±	±
ANGULAR TOL	± 0.5 °	

DRAFT WHERE APPLICABLE MUST REMAIN WITHIN DIMENSIONS

CURRENT REV DESC:

EC NO: 619055

DRWN: VLOKESHA 2019/05/23

CHK'D: NMANE02 2019/07/09

APPR: MRAMAKRISHNA 2019/07/09

INITIAL REVISION:

DRWN: AAB 1998/05/15

APPR: WAZ 1998/05/15

THIRD ANGLE PROJECTION | DRAWING: A3-SIZE | SERIES: 79108

molex

2MM DUAL ROW, FFC VERTICAL RECEPTACLE

PRODUCT CUSTOMER DRAWING

DOCUMENT NUMBER	DOC TYPE	DOC PART	REVISION
SDA-79108-XXXX	PSD	001	E3

MATERIAL NUMBER	CUSTOMER	SHEET NUMBER
SEE TABLE	GENERAL MARKET	3 OF 5

DOCUMENT STATUS	P1	RELEASE DATE	2019/07/09 06:48:15

FORMAT: Molex-letter-lb-prod-A3
REVISION: D
DATE: 2018/01/15

ASSEMBLY P/N PACKED IN T&R	CKT SIZE	PLATING OPTION	DIM A	DIM B	(F)	(Bo)	(W)
79108-6001	16	5	14.00	16.19	11.50	16.60	24.00

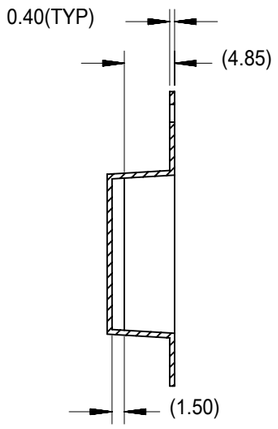

SECTION A-A

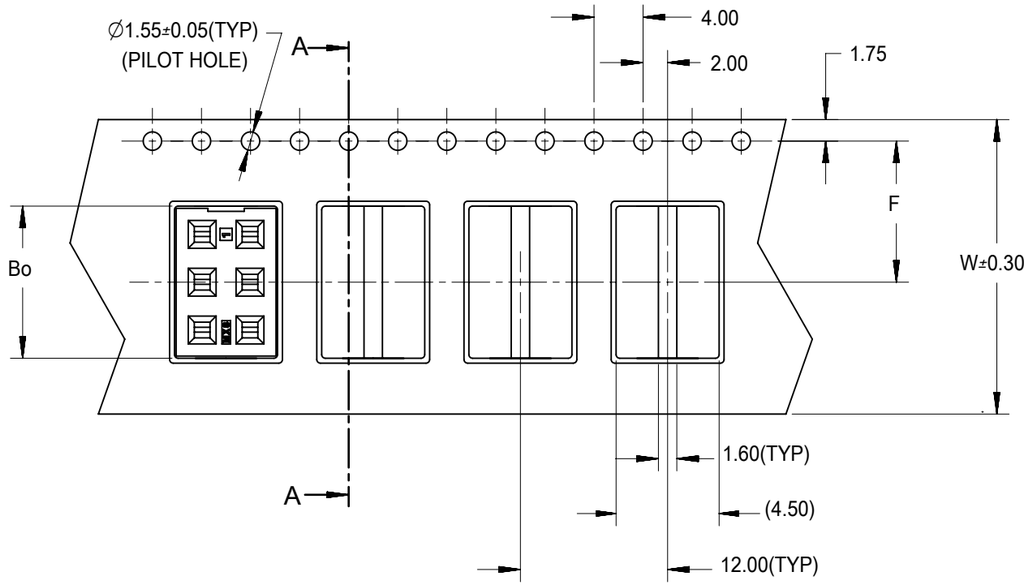

NOTES:

1. LEADER AND TRAILER TAPE

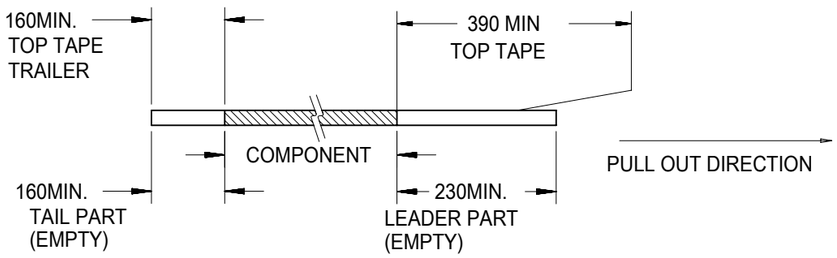

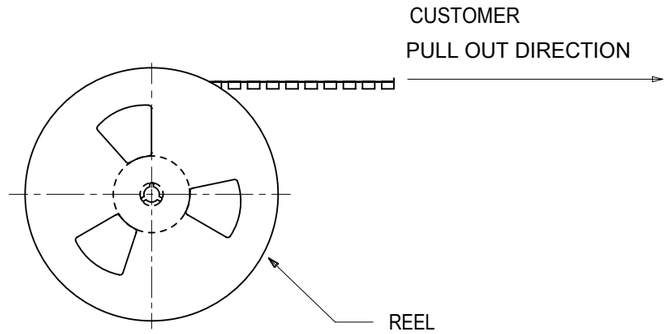

TAPE AND REEL ORIENTATION

2. PEELING OFF FORCE OF THE TOP TAPE: 20-80gf.
   (PEELING DIRECTION AS SHOWN IN FOLLOWING FIGURE)

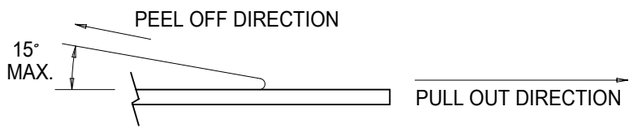

3. PACKAGING STANDARD IS AS PER EIA-481.
4. THE TAPE IS TREATED FOR ANTI-STATIC.
5. MATERIAL: CLEAR POLYSTYRENE.
6. TAPE & REEL QUANTITY = 800 PCS/REEL

THIS DRAWING CONTAINS INFORMATION THAT IS PROPRIETARY TO MOLEX ELECTRONIC TECHNOLOGIES, LLC AND SHOULD NOT BE USED WITHOUT WRITTEN PERMISSION

DIMENSION UNITS	SCALE
mm	NTS

GENERAL TOLERANCES (UNLESS SPECIFIED)

	MM	INCH
4 PLACES	±	±
3 PLACES	± 0.1	±
2 PLACES	± 0.15	±
1 PLACE	±	±
0 PLACES	±	±
ANGULAR TOL	± 0.5 °	

DRAFT WHERE APPLICABLE MUST REMAIN WITHIN DIMENSIONS

CURRENT REV DESC:

EC NO: 619055
DRWN: VLOKESHA 2019/05/23
CHK'D: NMANE02 2019/07/09
APPR: MRAMAKRISHNA 2019/07/09

INITIAL REVISION:
DRWN: AAB 1998/05/15
APPR: WAZ 1998/05/15

THIRD ANGLE PROJECTION | DRAWING: A3-SIZE | SERIES: 79108

molex

2MM DUAL ROW, FFC
VERTICAL RECEPTACLE

PRODUCT CUSTOMER DRAWING

DOCUMENT NUMBER	DOC TYPE	DOC PART	REVISION
SDA-79108-XXXX	PSD	001	E3

MATERIAL NUMBER	CUSTOMER	SHEET NUMBER
SEE TABLE	GENERAL MARKET	4 OF 5

DOCUMENT STATUS	P1	RELEASE DATE	2019/07/09 06:48:15

FORMAT: Met-tpca-master-tb-prod-A3
REVISION: D
DATE: 2018/01/15

BOARD TO BOARD (BTB) DISTANCE

RECEPTACLE	MATES WITH(HEADER)	BTB DISTANCE	PICTORIAL VIEW
79108	87831	6.94	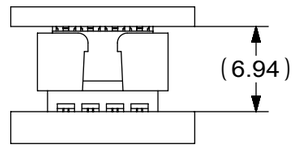
	87832	8.14	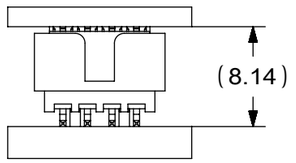

THIS DRAWING CONTAINS INFORMATION THAT IS PROPRIETARY TO MOLEX ELECTRONIC TECHNOLOGIES, LLC AND SHOULD NOT BE USED WITHOUT WRITTEN PERMISSION

DIMENSION UNITS	SCALE
mm	NTS

GENERAL TOLERANCES (UNLESS SPECIFIED)

	MM	INCH
4 PLACES	±	±
3 PLACES	± 0.1	±
2 PLACES	± 0.15	±
1 PLACE	±	±
0 PLACES	±	±
ANGULAR TOL	± 0.5 °	

DRAFT WHERE APPLICABLE MUST REMAIN WITHIN DIMENSIONS

CURRENT REV DESC:

EC NO: 619055
DRWN: VLOKESHA 2019/05/23
CHK'D: NMANE02 2019/07/09
APPR: MRAMAKRISHNA 2019/07/09

INITIAL REVISION:
DRWN: DRWN BY XXXX/XX/XX
APPR: APPR BY XXXX/XX/XX

THIRD ANGLE PROJECTION | DRAWING: A3-SIZE | SERIES: 79108

molex

2MM DUAL ROW, FFC
VERTICAL RECEPTACLE

PRODUCT CUSTOMER DRAWING

DOCUMENT NUMBER	DOC TYPE	DOC PART	REVISION
SDA-79108-XXXX	PSD	001	E3

MATERIAL NUMBER	CUSTOMER	SHEET NUMBER
	GENERAL MARKET	5 OF 5

DOCUMENT STATUS	P1	RELEASE DATE	2019/07/09 06:48:15

FORMAT: Met-tech-master-tb-prod-A3
REVISION: D
DATE: 2018/01/15