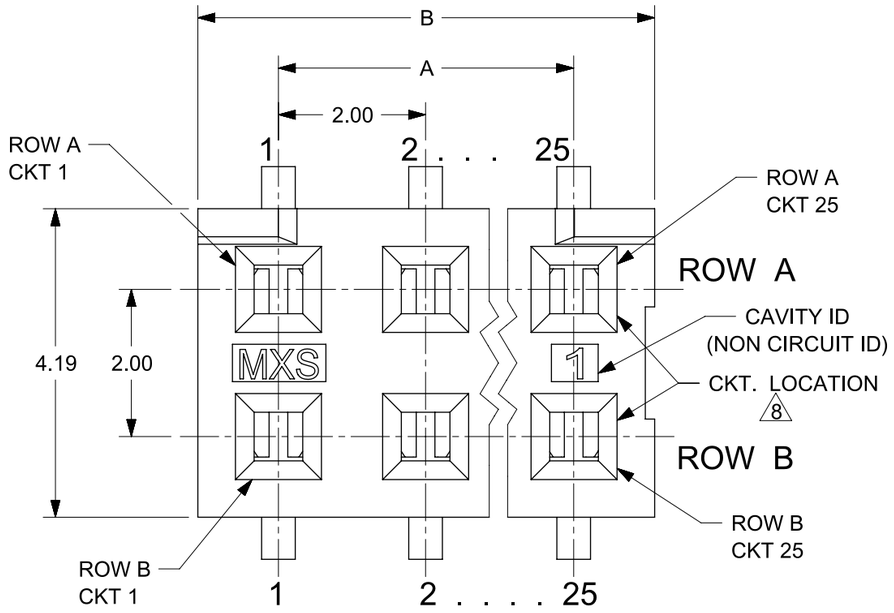

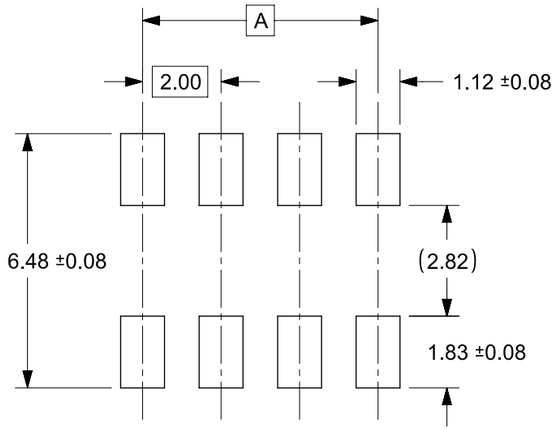

RECOMMENDED PCB PAD LAYOUT

NOTES:

1. HOUSING MATERIAL:
   LCP, GLASS FILLED, UL 94V-0
   COLOUR BLACK.
2. TERMINAL MATERIAL:
   PHOSPHOR BRONZE
3. SEE APPROPRIATE SHEET FOR CIRCUIT SIZE,
   PART NUMBERS AND OVERALL DIMENSIONS.
4. FOR ILLUSTRATION, 6 CKT ASSY SHOWN.
5. REFER TO PRODUCT SPEC PS-79107.
6. TUBE PACKAGING PER PK-70873-0217 OR
   TAPE PACKAGING PER PK-70873-0259
7. SEE FROM SHT 4 FOR PEG OPTION ASSEMBLIES.
8. CKT LOCATIONS ARE NUMBERED FROM LEFT TO
   RIGHT WHEN VIEWING ASSY FROM TOP WITH
   THE GATE RECESS ON THE RIGHT AS SHOWN.
9. SEE SHT 3, 7 & 9 FOR VOIDED CIRCUIT PART NUMBERS.
10. MEASUREMENT IS TAKEN BETWEEN THE TANGENT OF
    THE TOE TO TIP OF THE TERMINAL.

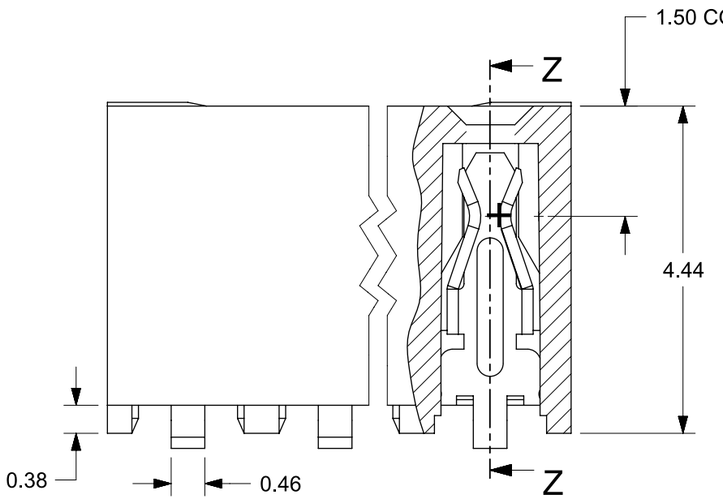

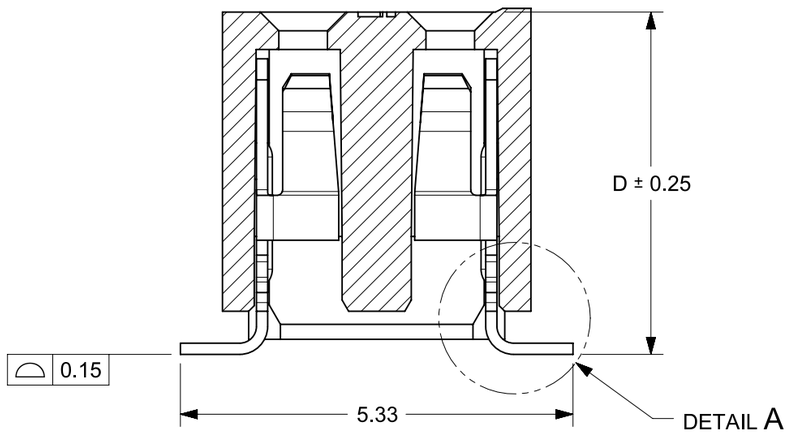

SECTION Z-Z

PLATING OPTION:

(4). 30µin (0.75µm) MIN. GOLD PLATE IN SELECTED AREA AND
75µin (1.88µm) MIN. TIN IN SELECTED AREA OVER
50µin (1.25µm) MIN. NICKEL OVER-ALL.

(5). 15µin (0.38µm) MIN. GOLD PLATE IN SELECTED AREA AND
75µin (1.88µm) MIN. TIN IN SELECTED AREA OVER
50µin (1.25µm) MIN. NICKEL OVER-ALL.

(6). 5µin (0.13µm) MIN. GOLD PLATE IN SELECTED AREA AND
75µin (1.88µm) MIN. TIN IN SELECTED AREA OVER
50µin (1.25µm) MIN. NICKEL OVER-ALL.

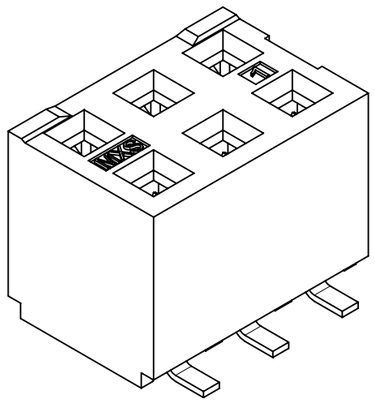

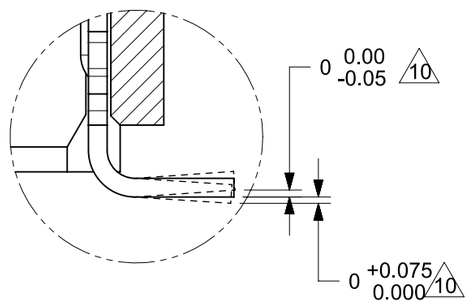

DETAIL A

BENDING ANGLE OF TAIL

THIS DRAWING CONTAINS INFORMATION THAT IS PROPRIETARY TO MOLEX ELECTRONIC TECHNOLOGIES, LLC AND SHOULD NOT BE USED WITHOUT WRITTEN PERMISSION

DIMENSION UNITS	SCALE
mm	NTS

GENERAL TOLERANCES (UNLESS SPECIFIED)

ANGULAR TOL	±	3 °
4 PLACES	±	0
3 PLACES	±	0
2 PLACES	±	0.25
1 PLACE	±	0.38
0 PLACES	±	0

DRAFT WHERE APPLICABLE MUST REMAIN WITHIN DIMENSIONS

CURRENT REV DESC: Adding new part numbers

EC NO: CO-000042098
DRWN: Meghraj Boodagatti 22-Apr-2026
CHK'D: Meghraj Boodagatti 08-Jun-2026
APPR: Saravanakumar Murugesan 08-Jun-2026

INITIAL REVISION:
DRWN: ATSEE 24-Jul-2014
APPR: LBLEE 01-Aug-2014

THIRD ANGLE PROJECTION | DRAWING: A3-SIZE | SERIES: 79109

molex

2MM DUAL ROW
VERTICAL RECEPTACLE, SMT

PRODUCT CUSTOMER DRAWING

DOCUMENT NUMBER	DOC TYPE	DOC PART	REVISION
SDA-79109-XXXX	PSD	001	N12

MATERIAL NUMBER	CUSTOMER	SHEET NUMBER
	GENERAL MARKET	1 OF 10

DOCUMENT STATUS	Production	RELEASE DATE	08-Jun-2026 04:55:11

FORMAT: master-tb-prod-A3
REVISION: J1
DATE: 2021/05/01

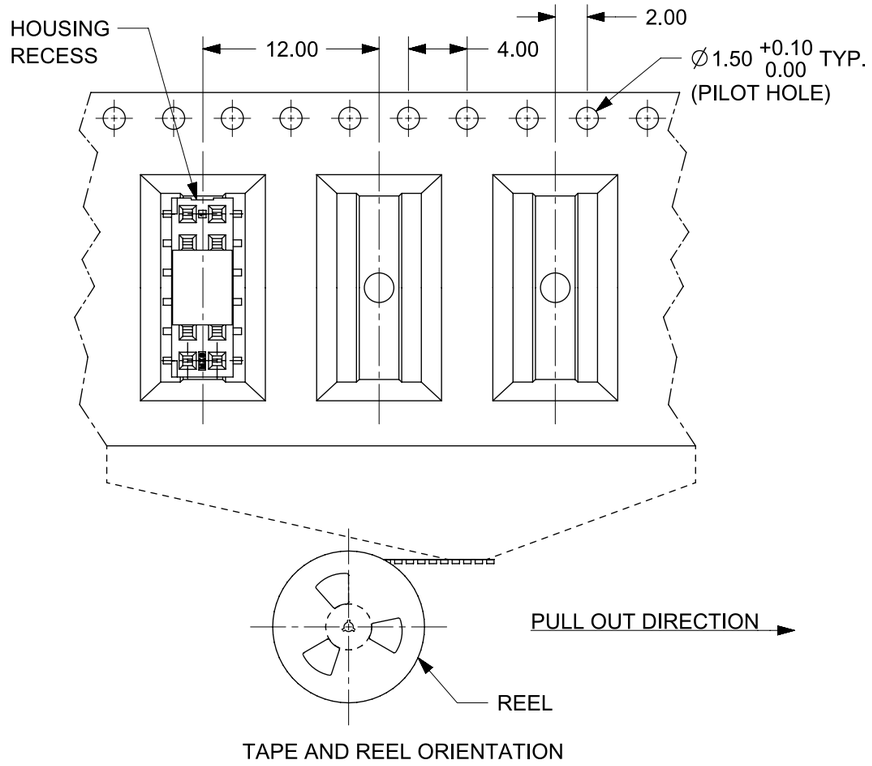

TAPE AND REEL ORIENTATION

NOTES:

1. LEADER AND TRAILER TAPE.

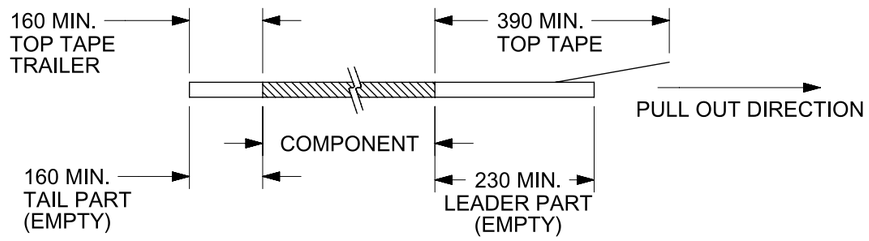

2. PEELING OFF FORCE OF THE TOP TAPE: 20-80gf.
   (PEELING DIRECTION AS SHOWN IN FOLLOWING FIGURE)

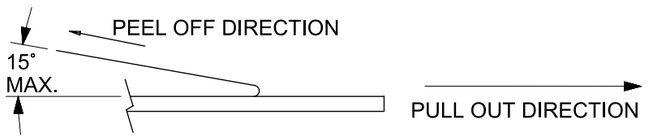

3. PACKAGING STANDARD IS AS PER EIA-481.
4. TAPE & REEL QUANTITY = 500 PCS/REEL

THIS DRAWING CONTAINS INFORMATION THAT IS PROPRIETARY TO MOLEX ELECTRONIC TECHNOLOGIES, LLC AND SHOULD NOT BE USED WITHOUT WRITTEN PERMISSION

DIMENSION UNITS	SCALE
mm	NTS

GENERAL TOLERANCES (UNLESS SPECIFIED)	
ANGULAR TOL	± 3 °
4 PLACES	± 0
3 PLACES	± 0
2 PLACES	± 0.25
1 PLACE	± 0.38
0 PLACES	± 0

DRAFT WHERE APPLICABLE MUST REMAIN WITHIN DIMENSIONS

CURRENT REV DESC: Adding new part numbers

EC NO: CO-000042098
DRWN: Meghraj Boodagatti 22-Apr-2026
CHK'D: Meghraj Boodagatti 08-Jun-2026
APPR: Saravanakumar Murugesan 08-Jun-2026

INITIAL REVISION:
DRWN: ATSEE 24-Jul-2014
APPR: LBLEE 01-Aug-2014

molex

2MM DUAL ROW
VERTICAL RECEPTACLE, SMT

PRODUCT CUSTOMER DRAWING

DOCUMENT NUMBER	DOC TYPE	DOC PART	REVISION
SDA-79109-XXXX	PSD	001	N12

THIRD ANGLE PROJECTION	DRAWING	SERIES	MATERIAL NUMBER	CUSTOMER	SHEET NUMBER
	A3-SIZE	79109		GENERAL MARKET	2 OF 10

DOCUMENT STATUS	Production	RELEASE DATE	08-Jun-2026 04:55:11

FORMAT: masterdb-prod-A3
REVISION: J1
DATE: 2021/05/01

WITHOUT PEG OPTION

CKT. SIZE	DIM. "A"	DIM. "B"	DIM. "D"	PLATING OPTION 5			PLATING OPTION 4			PLATING OPTION 6		
				ITEM NO. TUBE PACKED (WITHOUT CAP)	ITEM NO. TUBE PACKED (WITH CAP)	ITEM NO. TAPE PACKED (WITH CAP)	ITEM NO. TUBE PACKED (WITHOUT CAP)	ITEM NO. TUBE PACKED (WITH CAP)	ITEM NO. TAPE PACKED (WITH CAP)	ITEM NO. TUBE PACKED (WITHOUT CAP)	ITEM NO. TAPE PACKED (WITH CAP)	ITEM NO. TAPE PACKED (WITHOUT CAP)
04	2.00	4.19	4.65	79109-1001	79109-1025	79109-8401	79109-1051	79109-1075	79109-8451	79109-1101	79109-1149	79109-2801
04	2.00	4.19	4.65	-	-	-	-	-	-	-	79109-1125	-
06	4.00	6.19	4.65	79109-1002	79109-1026	79109-8402	79109-1052	79109-1076	79109-8452	79109-1102	-	-
08	6.00	8.19	4.65	79109-1003	79109-1027	79109-8403	79109-1053	79109-1077	79109-8453	79109-1103	-	-
10	8.00	10.19	4.65	79109-1004	79109-1028	79109-8404	79109-1054	79109-1078	79109-8454	79109-1104	-	-
12	10.00	12.19	4.65	79109-1005	79109-1029	79109-8405	79109-1055	79109-1079	79109-8455	79109-1105	-	-
14	12.00	14.19	4.65	79109-1006	79109-1030	79109-8406	79109-1056	79109-1080	79109-8456	79109-1106	-	-
16	14.00	16.19	4.65	79109-1007	79109-1031	79109-8407	79109-1057	79109-1081	79109-8457	79109-1107	-	-
18	16.00	18.19	4.65	79109-1008	79109-1032	79109-8408	79109-1058	79109-1082	79109-8458	79109-1108	-	-
20	18.00	20.19	4.65	79109-1009	79109-1033	79109-8409	79109-1059	79109-1083	79109-8459	79109-1109	-	-
20	18.00	20.19	4.65	79109-1049	-	-	-	-	-	-	-	
22	20.00	22.19	4.65	79109-1010	79109-1034	79109-8410	79109-1060	79109-1084	79109-8460	79109-1110	-	-
24	22.00	24.19	4.65	79109-1011	79109-1035	79109-8411	79109-1061	79109-1085	79109-8461	79109-1111	-	-
26	24.00	26.19	4.65	79109-1012	79109-1036	79109-8412	79109-1062	79109-1086	79109-8462	79109-1112	-	-
28	26.00	28.19	4.65	79109-1013	79109-1037	79109-8413	79109-1063	79109-1087	79109-8463	79109-1113	-	-
30	28.00	30.19	4.65	79109-1014	79109-1038	79109-8414	79109-1064	79109-1088	79109-8464	79109-1114	-	-
32	30.00	32.19	4.65	79109-1015	79109-1039	79109-8415	79109-1065	79109-1089	79109-8465	79109-1115	-	-
34	32.00	34.19	4.65	79109-1016	79109-1040	79109-8416	79109-1066	79109-1090	79109-8466	79109-1116	-	-
36	34.00	36.19	4.65	79109-1017	79109-1041	79109-8417	79109-1067	79109-1091	79109-8467	79109-1117	-	-
38	36.00	38.19	4.65	79109-1018	79109-1042	79109-8418	79109-1068	79109-1092	79109-8468	79109-1118	-	-
40	38.00	40.19	4.65	79109-1019	79109-1043	79109-8419	79109-1069	79109-1093	79109-8469	79109-1119	-	-
42	40.00	42.19	4.65	79109-1020	79109-1044	79109-8420	79109-1070	79109-1094	79109-8470	79109-1120	-	-
44	42.00	44.19	4.65	79109-1021	79109-1045	79109-8421	79109-1071	79109-1095	79109-8471	79109-1121	-	-
46	44.00	46.19	4.65	79109-1022	79109-1046	79109-8422	79109-1072	79109-1096	79109-8472	79109-1122	-	-
48	46.00	48.19	4.65	79109-1023	79109-1047	79109-8423	79109-1073	79109-1097	79109-8473	79109-1123	-	-
50	48.00	50.19	4.65	79109-1024	79109-1048	79109-8424	79109-1074	79109-1098	79109-8474	79109-1124	-	-
10	8.00	10.19	4.65	79109-2704	-	-	-	-	-	-	-	-

"X" INDICATES TOOLING NOT AVAILABLE.

ASSEMBLIES WITHOUT PEGS

VOIDED CIRCUIT OPTION

CKT. SIZE	ASSEMBLY (WITHOUT CAP IN TUBE)	VOID LOCATION(S) SEE SHEET 1 FOR CONVENTION		PLATING OPTION	DIM."A"	DIM."B"	DIM."D"
	PART NUMBER.	ROW	CKT. NO.(S)				
22	79109-5011	A	2	4	20.00	22.19	4.65
6	79109-5012	A	2	5	4.00	6.19	4.65

CKT. SIZE	ASSEMBLY (WITH CAP IN T&R)	VOID LOCATION(S) SEE SHEET 1 FOR CONVENTION		PLATING OPTION	DIM."A"	DIM."B"	DIM."D"
	PART NUMBER	ROW	CKT. NO.(S)				
50	79109-8924	A	13, 23	5	48.00	50.19	4.65
		B	23				

SPECIAL PACKAGING (TAPE PACKED WITHOUT CAP)

CKT. SIZE	DIM. "A"	DIM. "B"	DIM. "D"	ITEM NO.	PLATING OPTION SEE SHEET 1
06	4.00	6.19	4.65	79109-9004	5
20	18.00	20.19	4.65	79109-9005	5
50	48.00	50.19	4.65	79109-9006	5
34	32.00	34.19	4.65	79109-9007	5
10	8.00	10.19	4.65	79109-9008	5

NOTES:

1. TERMINALS WILL BE PRESENT IN VOIDED LOCATIONS. HOWEVER, PIN WINDOWS WILL BE CLOSED.
2. VOIDS CAN ONLY BE PRESENT IN ONE ROW OF A CONNECTOR.

THIS DRAWING CONTAINS INFORMATION THAT IS PROPRIETARY TO MOLEX ELECTRONIC TECHNOLOGIES, LLC AND SHOULD NOT BE USED WITHOUT WRITTEN PERMISSION

DIMENSION UNITS: mm | SCALE: NTS

GENERAL TOLERANCES (UNLESS SPECIFIED)

ANGULAR TOL	±	3 °
4 PLACES	±	0
3 PLACES	±	0
2 PLACES	±	0.25
1 PLACE	±	0.38
0 PLACES	±	0

DRAFT WHERE APPLICABLE MUST REMAIN WITHIN DIMENSIONS

CURRENT REV DESC: Adding new part numbers

EC NO: CO-000042098
DRWN: Meghraj Boodagatti 22-Apr-2026
CHK'D: Meghraj Boodagatti 08-Jun-2026
APPR: Saravanakumar Murugesan 08-Jun-2026

INITIAL REVISION:
DRWN: ATSEE 24-Jul-2014
APPR: LBLEE 01-Aug-2014

THIRD ANGLE PROJECTION | DRAWING: A3-SIZE | SERIES: 79109

molex

2MM DUAL ROW
VERTICAL RECEPTACLE, SMT

PRODUCT CUSTOMER DRAWING

DOCUMENT NUMBER	DOC TYPE	DOC PART	REVISION
SDA-79109-XXXX	PSD	001	N12

MATERIAL NUMBER	CUSTOMER	SHEET NUMBER
	GENERAL MARKET	3 OF 10

DOCUMENT STATUS: Production | RELEASE DATE: 08-Jun-2026 04:55:11

FORMAT: masterdb-prod-A3
REVISION: J1
DATE: 2021/05/01

PEG OPTION

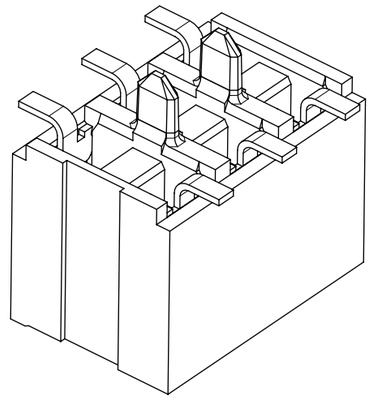

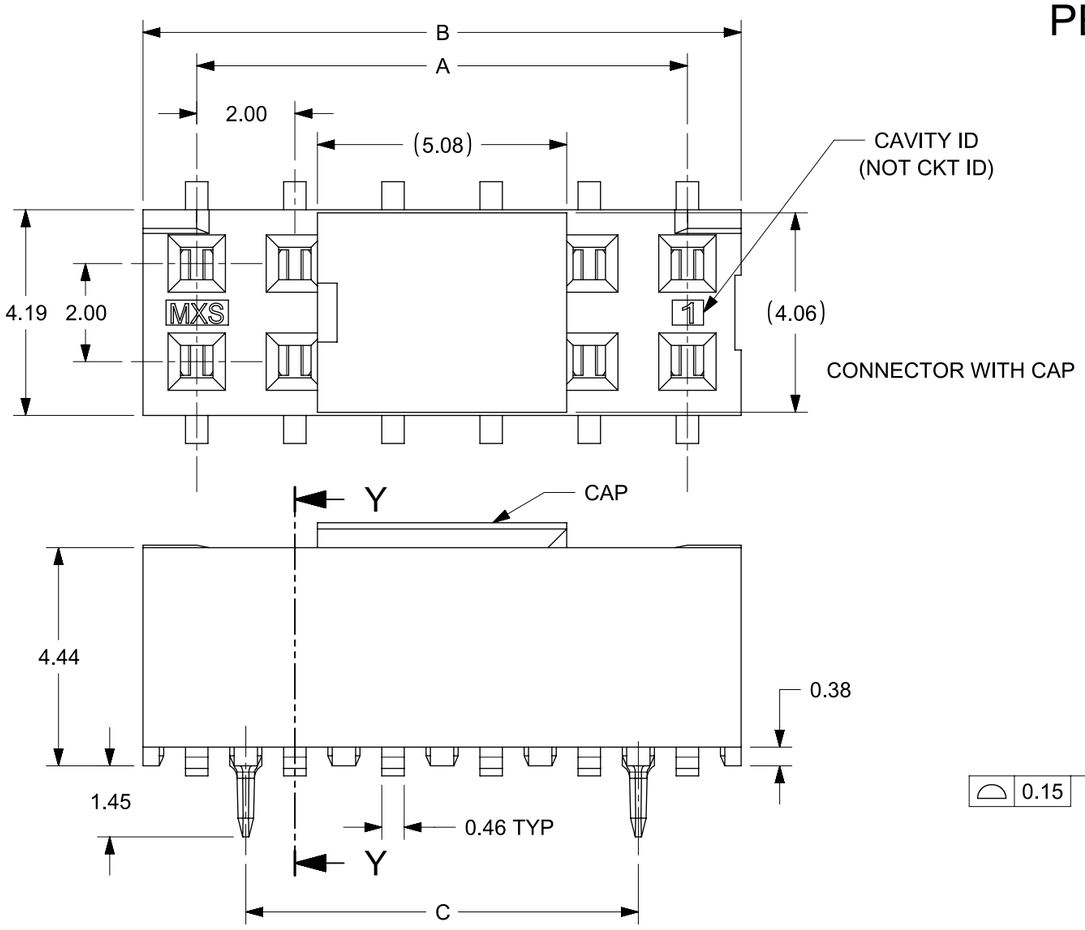

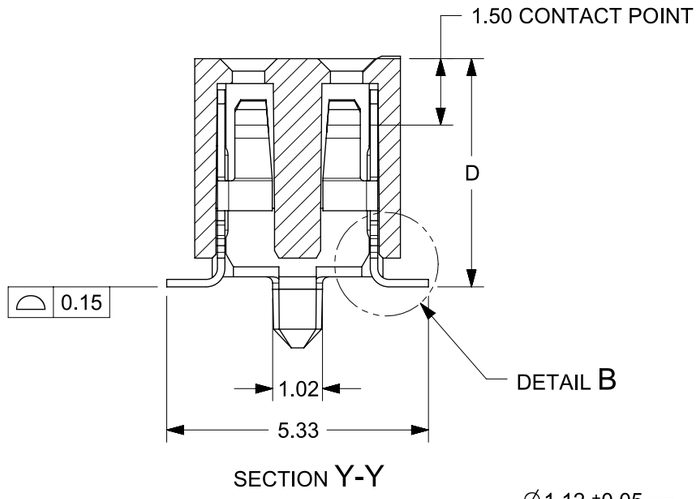

SECTION Y-Y

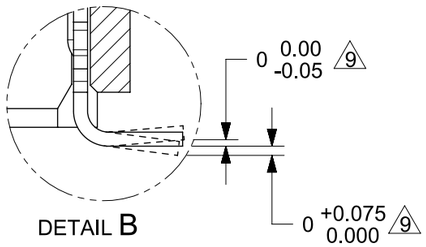

BENDING ANGLE OF TAIL

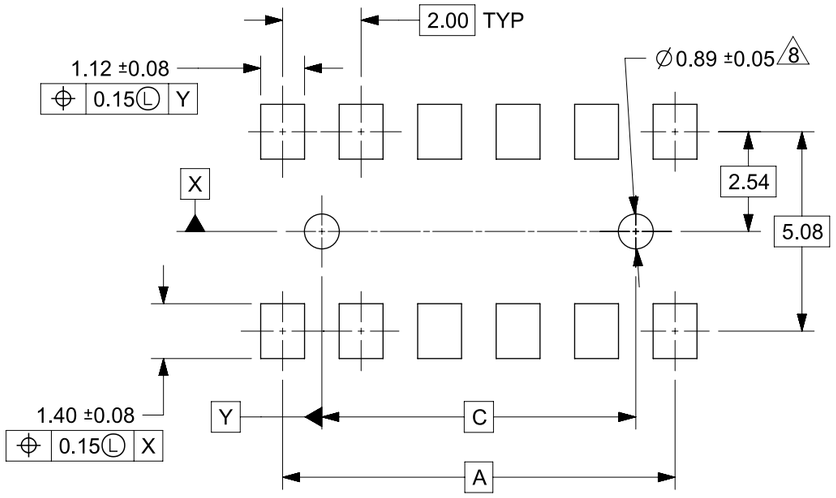

RECOMMENDED PCB LAYOUT

PLATING OPTION:

(4). 30µin (0.75µm) MIN. GOLD PLATE IN SELECTED AREA AND
75µin (1.88µm) MIN. TIN IN SELECTED AREA OVER
50µin (1.25µm) MIN. NICKEL OVER-ALL.

(5). 15µin (0.38µm) MIN. GOLD PLATE IN SELECTED AREA AND
75µin (1.88µm) MIN. TIN IN SELECTED AREA OVER
50µin (1.25µm) MIN. NICKEL OVER-ALL.

(6). 5µin (0.13µm) MIN. GOLD PLATE IN SELECTED AREA AND
75µin (1.88µm) MIN. TIN IN SELECTED AREA OVER
50µin (1.25µm) MIN. NICKEL OVER-ALL.

NOTES:

1. HOUSING MATERIAL: GLASS FILLED HIGH TEMP. THERMOPLASTIC. COLOR:BLACK.
2. TERMINAL MATERIAL: PHOSPHOR BRONZE.
3. SEE APPROPRIATE SHEET FOR CIRCUIT SIZE, PART NUMBERS AND OVER-ALL DIMENSIONS.
4. FOR ILLUSTRATION, 6 & 12 CIRCUIT ASSEMBLY SHOWN.
5. REFER TO PRODUCT SPECIFICATION PS-79107.
6. TUBE PACKAGING PER PK-70873-0217 OR TAPE PACKAGING PER 70873-0259.
7. SEE PSX-79107 FOR SUGGESTED BOTTOM ENTRY PIN LENGTHS.
8. 0.89±0.05 DIA FOR PRESS FIT ONLY.
   0.99±0.05 FOR PICK AND PLACE WITH MOUNTING FORCE
   1.20±0.076 FOR PICK AND PLACE WITH ZERO MOUNTING FORCE
9. MEASUREMENT IS TAKEN BETWEEN THE TANGENT OF THE TOE TO TIP OF THE TERMINAL.

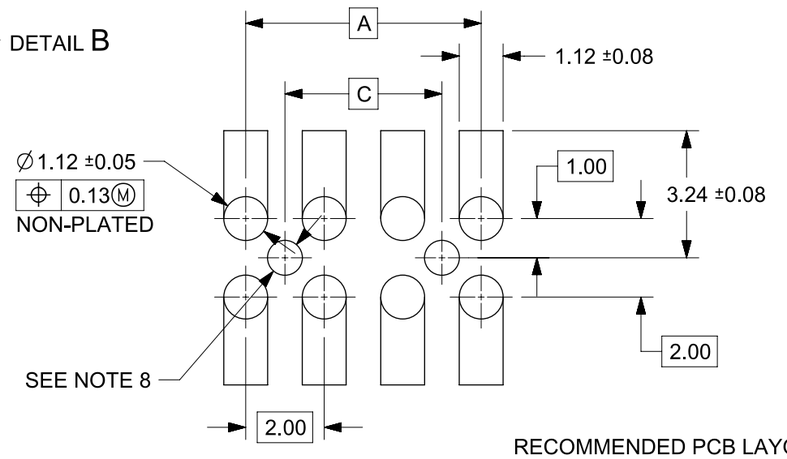

RECOMMENDED PCB LAYOUT
(BOTTOM ENTRY)

THIS DRAWING CONTAINS INFORMATION THAT IS PROPRIETARY TO MOLEX ELECTRONIC TECHNOLOGIES, LLC AND SHOULD NOT BE USED WITHOUT WRITTEN PERMISSION

DIMENSION UNITS: mm	SCALE: NTS	CURRENT REV DESC: Adding new part numbers	molex
GENERAL TOLERANCES (UNLESS SPECIFIED)			2MM DUAL ROW VERTICAL RECEPTACLE, SMT
ANGULAR TOL ± 3°		EC NO: CO-000042098	PRODUCT CUSTOMER DRAWING
4 PLACES ± 0		DRWN: Meghraj Boodagatti 22-Apr-2026	DOCUMENT NUMBER: SDA-79109-XXXX; DOC TYPE: PSD; DOC PART: 001; REVISION: N12
3 PLACES ± 0		CHK'D: Meghraj Boodagatti 08-Jun-2026	
2 PLACES ± 0.25		APPR: Saravanakumar Murugesan 08-Jun-2026	
1 PLACE ± 0.38		INITIAL REVISION: DRWN: ATSEE 24-Jul-2014 APPR: LBLEE 01-Aug-2014	
0 PLACES ± 0			
DRAFT WHERE APPLICABLE MUST REMAIN WITHIN DIMENSIONS		THIRD ANGLE PROJECTION; DRAWING: A3-SIZE; SERIES: 79109	MATERIAL NUMBER; CUSTOMER: GENERAL MARKET; SHEET NUMBER: 4 OF 10

DOCUMENT STATUS	Production	RELEASE DATE	08-Jun-2026 04:55:11

FORMAT: masterdb-prod-A3
REVISION: J1
DATE: 2021/05/01

PEG OPTION

CKT. SIZE	DIM. "A"	DIM. "B"	DIM. "C"	DIM. "D"	PLATING OPTION 5			PLATING OPTION 4			PLATING OPTION 6	
					ITEM NO. TUBE PACKED (WITHOUT CAP)	ITEM NO. TAPE PACKED (WITH CAP)	ITEM NO. TUBE PACKED (WITH CAP)	ITEM NO. TUBE PACKED (WITHOUT CAP)	ITEM NO. TUBE PACKED (WITH CAP)	ITEM NO. TAPE PACKED (WITH CAP)	ITEM NO. TUBE PACKED (WITHOUT CAP)	ITEM NO. TAPE PACKED (WITH CAP)
04	2.00	4.19	-	4.65	79109-1201	79109-8601	79109-1225	79109-1251	79109-1275	79109-8651	79109-1301	-
06	4.00	6.19	2.00	4.65	79109-1202	79109-8602	79109-1226	79109-1252	79109-1276	79109-8652	79109-1302	-
08	6.00	8.19	4.00	4.65	79109-1203	79109-8603	79109-1227	79109-1253	79109-1277	79109-8653	79109-1303	-
10	8.00	10.19	6.00	4.65	79109-1204	79109-8604	79109-1228	79109-1254	79109-1278	79109-8654	79109-1304	-
12	10.00	12.19	8.00	4.65	79109-1205	79109-8605	79109-1229	79109-1255	79109-1279	79109-8655	79109-1305	-
14	12.00	14.19	10.00	4.65	79109-1206	79109-8606	79109-1230	79109-1256	79109-1280	79109-8656	79109-1306	-
16	14.00	16.19	12.00	4.65	79109-1207	79109-8607	79109-1231	79109-1257	79109-1281	79109-8657	79109-1307	-
18	16.00	18.19	14.00	4.65	79109-1208	79109-8608	79109-1232	79109-1258	79109-1282	79109-8658	79109-1308	-
20	18.00	20.19	16.00	4.65	79109-1209	79109-8609	79109-1233	79109-1259	79109-1283	79109-8659	79109-1309	-
22	20.00	22.19	18.00	4.65	79109-1210	79109-8610	79109-1234	79109-1260	79109-1284	79109-8660	79109-1310	-
24	22.00	24.19	20.00	4.65	79109-1211	79109-8611	79109-1235	79109-1261	79109-1285	79109-8661	79109-1311	-
26	24.00	26.19	22.00	4.65	79109-1212	79109-8612	79109-1236	79109-1262	79109-1286	79109-8662	79109-1312	-
28	26.00	28.19	24.00	4.65	79109-1213	79109-8613	79109-1237	79109-1263	79109-1287	79109-8663	79109-1313	-
30	28.00	30.19	26.00	4.65	79109-1214	79109-8614	79109-1238	79109-1264	79109-1288	79109-8664	79109-1314	-
32	30.00	32.19	28.00	4.65	79109-1215	79109-8615	79109-1239	79109-1265	79109-1289	79109-8665	79109-1315	-
34	32.00	34.19	30.00	4.65	79109-1216	79109-8616	79109-1240	79109-1266	79109-1290	79109-8666	79109-1316	-
36	34.00	36.19	32.00	4.65	79109-1217	79109-8617	79109-1241	79109-1267	79109-1291	79109-8667	79109-1317	-
38	36.00	38.19	34.00	4.65	79109-1218	79109-8618	79109-1242	79109-1268	79109-1292	79109-8668	79109-1318	-
40	38.00	40.19	36.00	4.65	79109-1219	79109-8619	79109-1243	79109-1269	79109-1293	79109-8669	79109-1319	-
42	40.00	42.19	38.00	4.65	79109-1220	79109-8620	79109-1244	79109-1270	79109-1294	79109-8670	79109-1320	-
44	42.00	44.19	40.00	4.65	79109-1221	79109-8621	79109-1245	79109-1271	79109-1295	79109-8671	79109-1321	-
46	44.00	46.19	42.00	4.65	79109-1222	79109-8622	79109-1246	79109-1272	79109-1296	79109-8672	79109-1322	-
48	46.00	48.19	44.00	4.65	79109-1223	79109-8623	79109-1247	79109-1273	79109-1297	79109-8673	79109-1323	-
50	48.00	50.19	46.00	4.65	79109-1224	79109-8624	79109-1248	79109-1274	79109-1298	79109-8674	79109-1324	-
08	6.00	8.19	4.00	4.65	79109-2705							

'X' INDICATES TOOLING NOT AVAILABLE

THIS DRAWING CONTAINS INFORMATION THAT IS PROPRIETARY TO MOLEX ELECTRONIC TECHNOLOGIES, LLC AND SHOULD NOT BE USED WITHOUT WRITTEN PERMISSION

DIMENSION UNITS	SCALE
mm	NTS

GENERAL TOLERANCES (UNLESS SPECIFIED)

ANGULAR TOL	±	3 °
4 PLACES	±	0
3 PLACES	±	0
2 PLACES	±	0.25
1 PLACE	±	0.38
0 PLACES	±	0

DRAFT WHERE APPLICABLE MUST REMAIN WITHIN DIMENSIONS

CURRENT REV DESC: Adding new part numbers

EC NO: CO-000042098
DRWN: Meghraj Boodagatti 22-Apr-2026
CHK'D: Meghraj Boodagatti 08-Jun-2026
APPR: Saravanakumar Murugesan 08-Jun-2026

INITIAL REVISION:
DRWN: ATSEE 24-Jul-2014
APPR: LBLEE 01-Aug-2014

molex

2MM DUAL ROW
VERTICAL RECEPTACLE, SMT

PRODUCT CUSTOMER DRAWING

DOCUMENT NUMBER	DOC TYPE	DOC PART	REVISION
SDA-79109-XXXX	PSD	001	N12

THIRD ANGLE PROJECTION	DRAWING	SERIES	MATERIAL NUMBER	CUSTOMER	SHEET NUMBER
	A3-SIZE	79109		GENERAL MARKET	5 OF 10

DOCUMENT STATUS	Production	RELEASE DATE	08-Jun-2026 04:55:11

FORMAT: master-tb-prod-A3
REVISION: J1
DATE: 2021/05/01

PEG OPTION

SPECIAL PACKAGING (TAPE PACKED WITHOUT CAP)

	CKT. SIZE	DIM. "A"	DIM. "B"	DIM. "C"	DIM. "D"	ITEM NO.	PLATING OPTION SEE SHEET 1
	50	48.00	50.19	46.00	4.65	79109-9103	5
N10	10	8.00	10.19	6.00	4.65	79109-9105	5

THIS DRAWING CONTAINS INFORMATION THAT IS PROPRIETARY TO MOLEX ELECTRONIC TECHNOLOGIES, LLC AND SHOULD NOT BE USED WITHOUT WRITTEN PERMISSION

DIMENSION UNITS	SCALE
mm	NTS

GENERAL TOLERANCES (UNLESS SPECIFIED)		
ANGULAR TOL	±	3 °
4 PLACES	±	0
3 PLACES	±	0
2 PLACES	±	0.25
1 PLACE	±	0.38
0 PLACES	±	0

DRAFT WHERE APPLICABLE MUST REMAIN WITHIN DIMENSIONS

CURRENT REV DESC: Adding new part numbers

EC NO: CO-000042098
DRWN: Meghraj Boodagatti 22-Apr-2026
CHK'D: Meghraj Boodagatti 08-Jun-2026
APPR: Saravanakumar Murugesan 08-Jun-2026

INITIAL REVISION:
DRWN: ATSEE 24-Jul-2014
APPR: LBLEE 01-Aug-2014

molex

2MM DUAL ROW
VERTICAL RECEPTACLE, SMT

PRODUCT CUSTOMER DRAWING

DOCUMENT NUMBER	DOC TYPE	DOC PART	REVISION
SDA-79109-XXXX	PSD	001	N12

THIRD ANGLE PROJECTION	DRAWING	SERIES	MATERIAL NUMBER	CUSTOMER	SHEET NUMBER
	A3-SIZE	79109		GENERAL MARKET	6 OF 10

DOCUMENT STATUS	Production	RELEASE DATE	08-Jun-2026 04:55:11

FORMAT: masterdb-prod-A3
REVISION: J1
DATE: 2021/05/01

ASSEMBLIES WITH PEGS

VOIDED CIRCUIT OPTION

CKT. SIZE	ASSEMBLY (WITHOUT CAP IN TUBE)	VOID LOCATION(S) SEE SHEET 1 FOR CONVENTION		PLATING OPTION	DIM."A"	DIM."B"	DIM."C"	DIM."D"
	ITEM NO.	ROW	CKT. NO.(S)					
48	79109-6011	ROW A	1, 24	5	46.00	48.19	44.00	4.65
44	79109-6012	ROW B	10	5	42.00	44.19	42.00	4.65

NOTES:
1. TERMINALS WILL BE PRESENT IN VOIDED LOCATIONS. HOWEVER, PIN WINDOWS WILL BE CLOSED.
2. VOIDS CAN ONLY BE PRESENT IN ONE ROW OF A CONNECTOR.

THIS DRAWING CONTAINS INFORMATION THAT IS PROPRIETARY TO MOLEX ELECTRONIC TECHNOLOGIES, LLC AND SHOULD NOT BE USED WITHOUT WRITTEN PERMISSION

DIMENSION UNITS	SCALE
mm	NTS

GENERAL TOLERANCES (UNLESS SPECIFIED)		
ANGULAR TOL	±	3 °
4 PLACES	±	0
3 PLACES	±	0
2 PLACES	±	0.25
1 PLACE	±	0.38
0 PLACES	±	0

DRAFT WHERE APPLICABLE MUST REMAIN WITHIN DIMENSIONS

CURRENT REV DESC: Adding new part numbers

EC NO: CO-000042098
DRWN: Meghraj Boodagatti 22-Apr-2026
CHK'D: Meghraj Boodagatti 08-Jun-2026
APPR: Saravanakumar Murugesan 08-Jun-2026

INITIAL REVISION:
DRWN: ATSEE 24-Jul-2014
APPR: LBLEE 01-Aug-2014

THIRD ANGLE PROJECTION | DRAWING: A3-SIZE | SERIES: 79109

molex

2MM DUAL ROW
VERTICAL RECEPTACLE, SMT

PRODUCT CUSTOMER DRAWING

DOCUMENT NUMBER	DOC TYPE	DOC PART	REVISION
SDA-79109-XXXX	PSD	001	N12

MATERIAL NUMBER	CUSTOMER	SHEET NUMBER
	GENERAL MARKET	7 OF 10

DOCUMENT STATUS	Production	RELEASE DATE	08-Jun-2026 04:55:11

FORMAT: masterdb-prod-A3
REVISION: J1
DATE: 2021/05/01

SPECIAL - CUSTOM TERMINAL FEET

PEG OPTION

CKT. SIZE	DIM. "A"	DIM. "B"	DIM. "C"	DIM. "D"	PLATING OPTION 5			
					ITEM NO. TUBE PACKED (WITHOUT CAP)		ITEM NO. TAPE PACKED (WITH CAP)	ITEM NO. TUBE PACKED (WITH CAP)
04	2.00	4.19	-	4.70	X		X 79109-8751	X
06	4.00	6.19	2.00	4.70	X		X 79109-8752	X
08	6.00	8.19	4.00	4.70	X		X 79109-8753	X
10	8.00	10.19	6.00	4.70	X		X 79109-8754	X
12	10.00	12.19	8.00	4.70	X		X 79109-8755	X
14	12.00	14.19	10.00	4.70	X		X 79109-8756	X
16	14.00	16.19	12.00	4.70	X		X 79109-8757	X
18	16.00	18.19	14.00	4.70	X		X 79109-8758	X
20	18.00	20.19	16.00	4.70	X		X 79109-8759	X
22	20.00	22.19	18.00	4.70	X		X 79109-8760	X
24	22.00	24.19	20.00	4.70	X		X 79109-8761	X
26	24.00	26.19	22.00	4.70	X		X 79109-8762	X
28	26.00	28.19	24.00	4.70	X		X 79109-8763	X
30	28.00	30.19	26.00	4.70		79109-7010	79109-8764	X 79109-7065
32	30.00	32.19	28.00	4.70	X		X 79109-8765	X
34	32.00	34.19	30.00	4.70	X		X 79109-8766	X
36	34.00	36.19	32.00	4.70	X		X 79109-8767	X
38	36.00	38.19	34.00	4.70	X		X 79109-8768	X
40	38.00	40.19	36.00	4.70	X		X 79109-8769	X
42	40.00	42.19	38.00	4.70	X		X N.A.	X
44	42.00	44.19	40.00	4.70		79109-7016	X N.A.	X
46	44.00	46.19	42.00	4.70	X		X N.A.	X
48	46.00	48.19	44.00	4.70	X		X N.A.	X
50	48.00	50.19	46.00	4.70		79109-7015	X N.A.	X

'X' INDICATES TOOLING NOT AVAILABLE

THIS DRAWING CONTAINS INFORMATION THAT IS PROPRIETARY TO MOLEX ELECTRONIC TECHNOLOGIES, LLC AND SHOULD NOT BE USED WITHOUT WRITTEN PERMISSION

DIMENSION UNITS	mm
SCALE	NTS
GENERAL TOLERANCES (UNLESS SPECIFIED)	
ANGULAR TOL	± 3 °
4 PLACES	± 0
3 PLACES	± 0
2 PLACES	± 0.25
1 PLACE	± 0.38
0 PLACES	± 0
DRAFT WHERE APPLICABLE MUST REMAIN WITHIN DIMENSIONS	

CURRENT REV DESC: Adding new part numbers

EC NO: CO-000042098
DRWN: Meghraj Boodagatti 22-Apr-2026
CHK'D: Meghraj Boodagatti 08-Jun-2026
APPR: Saravanakumar Murugesan 08-Jun-2026

INITIAL REVISION:
DRWN: ATSEE 24-Jul-2014
APPR: LBLEE 01-Aug-2014

molex

2MM DUAL ROW
VERTICAL RECEPTACLE, SMT

PRODUCT CUSTOMER DRAWING

DOCUMENT NUMBER	DOC TYPE	DOC PART	REVISION
SDA-79109-XXXX	PSD	001	N12

THIRD ANGLE PROJECTION	DRAWING	SERIES	MATERIAL NUMBER	CUSTOMER	SHEET NUMBER
	A3-SIZE	79109		GENERAL MARKET	8 OF 10

DOCUMENT STATUS	Production	RELEASE DATE	08-Jun-2026 04:55:11

FORMAT: master-tb-prod-A3
REVISION: J1
DATE: 2021/05/01

SPECIAL - CUSTOM TERMINAL FEET

VOIDED CURCUIT OPTION

CKT. SIZE	ASSEMBLY ITEM NO. TUBE PACKED (WITHOUT CAP)		ASSEMBLY ITEM NO. TAPE PACKED (WITH CAP)	VOID LOCATION(S) SEE SHEET 1 FOR CONVENTION ROW	VOID LOCATION(S) CKT. NO.(S)	PLATING OPTION	DIM."A"	DIM."B"	DIM."C"	DIM."D"	PEG OPTION
48		79109-7011	X 79109-8385	ROW A	1, 24	5	46.00	48.19	44.00	4.70	YES
42		79109-7012	X 79109-8386	ROW A	1, 21	5	40.00	42.19	38.00	4.70	YES
20		79109-7013	X 79109-8387	ROW A	1, 10	5	18.00	20.19	16.00	4.70	YES
50		79109-7014	X 79109-8388	ROW B	13	5	48.00	50.19	46.00	4.70	YES
50		79109-7017	X 79109-8988	ROW B	13	5	48.00	50.19	46.00	4.70	NO

'X' INDICATES TOOLING NOT AVAILABLE.

NOTES:
1. TERMINALS WILL BE PRESENT IN VOIDED LOCATIONS. HOWEVER, PIN WINDOWS WILL BE CLOSED.
2. VOIDS CAN ONLY BE PRESENT IN ONE ROW OF A CONNECTOR.

THIS DRAWING CONTAINS INFORMATION THAT IS PROPRIETARY TO MOLEX ELECTRONIC TECHNOLOGIES, LLC AND SHOULD NOT BE USED WITHOUT WRITTEN PERMISSION

DIMENSION UNITS	mm
SCALE	NTS
GENERAL TOLERANCES (UNLESS SPECIFIED)	
ANGULAR TOL	± 3 °
4 PLACES	± 0
3 PLACES	± 0
2 PLACES	± 0.25
1 PLACE	± 0.38
0 PLACES	± 0
DRAFT WHERE APPLICABLE MUST REMAIN WITHIN DIMENSIONS	

CURRENT REV DESC: Adding new part numbers

EC NO: CO-000042098
DRWN: Meghraj Boodagatti 22-Apr-2026
CHK'D: Meghraj Boodagatti 08-Jun-2026
APPR: Saravanakumar Murugesan 08-Jun-2026

INITIAL REVISION:
DRWN: ATSEE 24-Jul-2014
APPR: LBLEE 01-Aug-2014

THIRD ANGLE PROJECTION | DRAWING: A3-SIZE | SERIES: 79109

molex

2MM DUAL ROW
VERTICAL RECEPTACLE, SMT

PRODUCT CUSTOMER DRAWING

DOCUMENT NUMBER	DOC TYPE	DOC PART	REVISION
SDA-79109-XXXX	PSD	001	N12

MATERIAL NUMBER	CUSTOMER	SHEET NUMBER
	GENERAL MARKET	9 OF 10

DOCUMENT STATUS	Production	RELEASE DATE	08-Jun-2026 04:55:11

FORMAT: master-tb-prod-A3
REVISION: J1
DATE: 2021/05/01

BOARD TO BOARD (BTB) DISTANCE

RECEPTACLE	MATES WITH(HEADER)	BTB DISTANCE	PICTORIAL VIEW
79109	87831	7.15	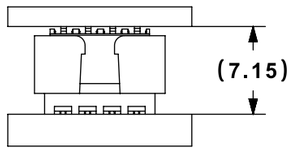
	87832	8.35	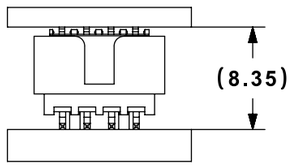
	151117	7.15	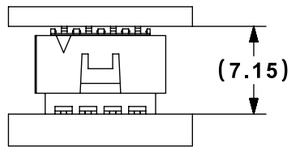
	151118	8.35	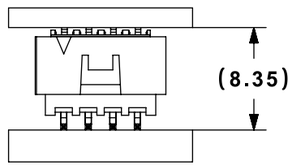

THIS DRAWING CONTAINS INFORMATION THAT IS PROPRIETARY TO MOLEX ELECTRONIC TECHNOLOGIES, LLC AND SHOULD NOT BE USED WITHOUT WRITTEN PERMISSION

DIMENSION UNITS	SCALE
mm	NTS

GENERAL TOLERANCES (UNLESS SPECIFIED)

ANGULAR TOL	±	3 °
4 PLACES	±	0
3 PLACES	±	0
2 PLACES	±	0.25
1 PLACE	±	0.38
0 PLACES	±	0

DRAFT WHERE APPLICABLE MUST REMAIN WITHIN DIMENSIONS

CURRENT REV DESC: Adding new part numbers

EC NO: CO-000042098
DRWN: Meghraj Boodagatti 22-Apr-2026
CHK'D: Meghraj Boodagatti 08-Jun-2026
APPR: Saravanakumar Murugesan 08-Jun-2026

INITIAL REVISION:
DRWN: ATSEE 24-Jul-2014
APPR: LBLEE 01-Aug-2014

molex

2MM DUAL ROW
VERTICAL RECEPTACLE, SMT

PRODUCT CUSTOMER DRAWING

DOCUMENT NUMBER	DOC TYPE	DOC PART	REVISION
SDA-79109-XXXX	PSD	001	N12

THIRD ANGLE PROJECTION	DRAWING	SERIES	MATERIAL NUMBER	CUSTOMER	SHEET NUMBER
	A3-SIZE	79109		GENERAL MARKET	10 OF 10

DOCUMENT STATUS	Production	RELEASE DATE	08-Jun-2026 04:55:11

FORMAT: master-tb-prod-A3
REVISION: J1
DATE: 2021/05/01