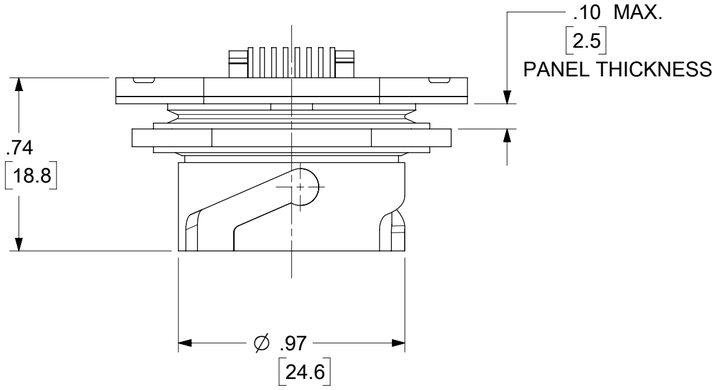

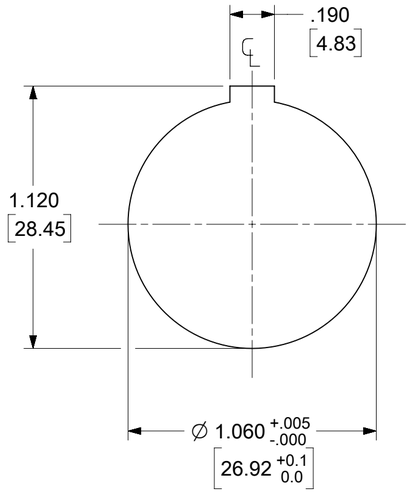

REF. PANEL HOLE

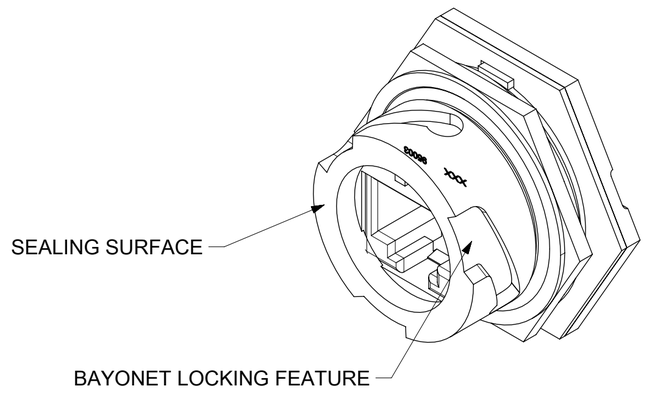

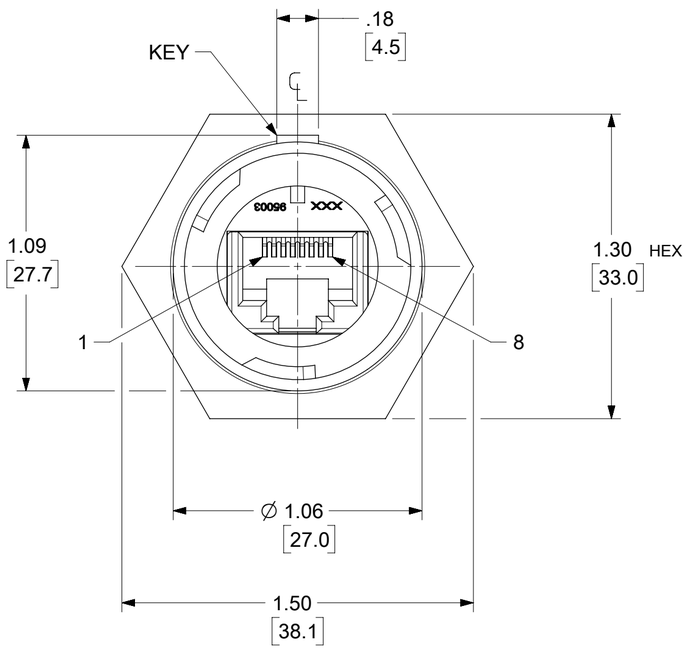

RJ45 FACE VIEW
REF. TIA/EIA 568B

PANEL NUT & GASKET
NOT SHOWN

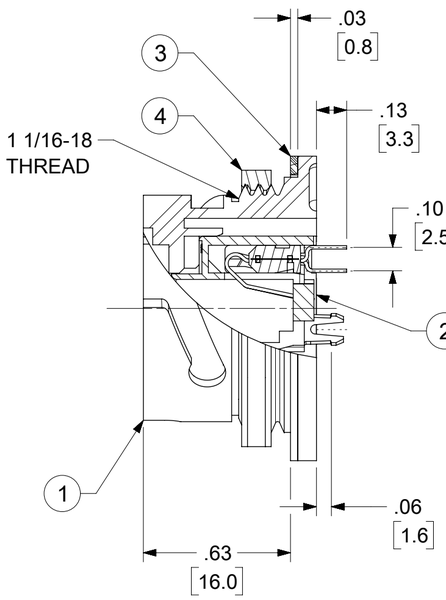

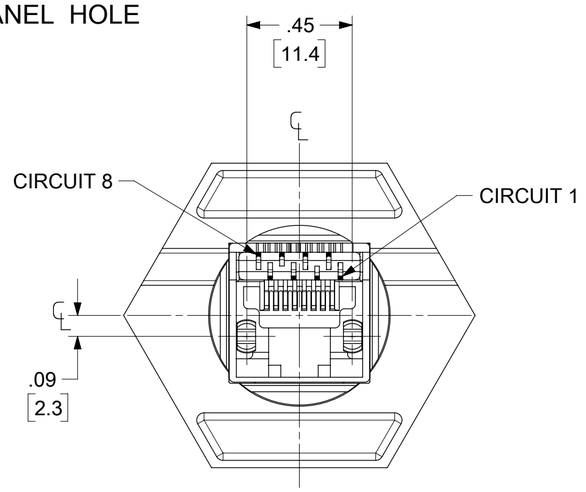

RJ45 BACK VIEW

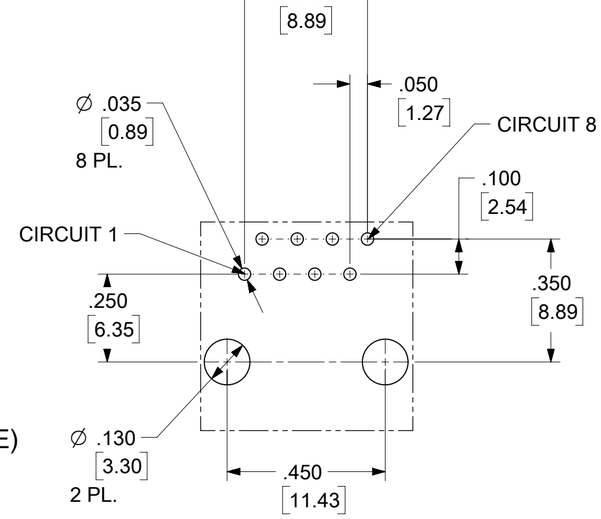

REF. PCB LAYOUT
(COMPONENT SIDE)

NOTES:
1. MATERIAL: SEE BOM TABLE
2. MATERIAL: SEE BOM TABLE
3. ELECTRICAL SPECS: 125V, 1.5A
4. DIMS SHOWN ARE FOR REFERENCE UNLESS NOTED OR TOLERANCED OTHERWISE

ITEM	DESCRIPTION	MATERIAL	FINISH
4	PANEL NUT	NYLON	BLACK
3	PANEL GASKET	NEOPRENE	BLACK
2	RJ45 JACK, PCB MOUNTING	LCP & Cu ALLOY	BLACK/GOLD PLATED
1	RECEPTACLE HOUSING	PBT	BLACK

A

DOCUMENT STATUS	P1	RELEASE DATE	2021/08/09 13:47:03

THIS DRAWING CONTAINS INFORMATION THAT IS PROPRIETARY TO MOLEX ELECTRONIC TECHNOLOGIES, LLC AND SHOULD NOT BE USED WITHOUT WRITTEN PERMISSION

FUNCTIONAL SYMBOLS
FA = 0
FC = 0
FP = 0
DIVISIONAL SYMBOLS

DIMENSION UNITS: INCH/MM
SCALE: 2:1

GENERAL TOLERANCES (UNLESS SPECIFIED)

	MM	INCH
4 PLACES	±	±
3 PLACES	±	±
2 PLACES	±	±
1 PLACE	±	±
0 PLACES	±	±
ANGULAR TOL	± °	

DRAFT WHERE APPLICABLE MUST REMAIN WITHIN DIMENSIONS

CURRENT REV DESC: REDRAWN TO NX, SUPERSEDES SD-84702-008, ITEM 2 WAS POLYESTER

EC NO: 672198
DRWN: RSTONE 2021/03/22
CHK'D: MZIELINSKI 2021/08/02
APPR: BWOODMAN 2021/08/09

INITIAL REVISION:
DRWN:
APPR:

THIRD ANGLE PROJECTION | DRAWING: C-SIZE | SERIES: 84702

molex

RJ45 RECEPTACLE, PCB MOUNT
INDUSTRIAL ETHERNET

PRODUCT CUSTOMER DRAWING

DOCUMENT NUMBER	DOC TYPE	DOC PART	REVISION
847020005	PSD	000	A

MATERIAL NUMBER	CUSTOMER	SHEET NUMBER
847020005	GENERAL MARKET	1 OF 1

FORMAT: IN-master-lib-prod-C
REVISION: D
DATE: 2020/11/4