MATERIAL NO.	LENGTH	REF. OVERALL LENGTH
847022003	3 FT 0 IN (0.9M)	3 FT 4.4 IN (1.03M)

MATERIAL NO.	LENGTH	REF. OVERALL LENGTH
847022015	15 FT 0 IN (4.4M)	15 FT 4.4 IN (4.68M)
847022020	20 FT 0 IN (6.1M)	20 FT 4.4 IN (6.21M)
847022050	50 FT 0 IN (15.2M)	50FT 4.4 IN (15.35M)

(L) CABLE LENGTH TOLERANCES
<.3M [1FT]: +19mm-0 [+.75in-0]
.3 - .9M [1 - 3FT]: +44.5mm-0 [+1.75in-0]
.9 - 1.8M [3 - 6FT]: +55.6mm-0 [+2.19in-0]
1.8 - 3.7M [6 - 12FT: +88.9mm-0 [+3.50in-0]
3.7 - 7.3M [12 - 24FT]: +165.1mm-0 [+6.50in-0]
7.3-14.6M [24 - 48FT]: +317.5mm-0 [+12.50in-0]
14.6 - 30.5M [48-100FT]: +622.3mm-0 [+24.50in-0]
OVER 30M [100FT] +2% OF FINISHED LENGTH

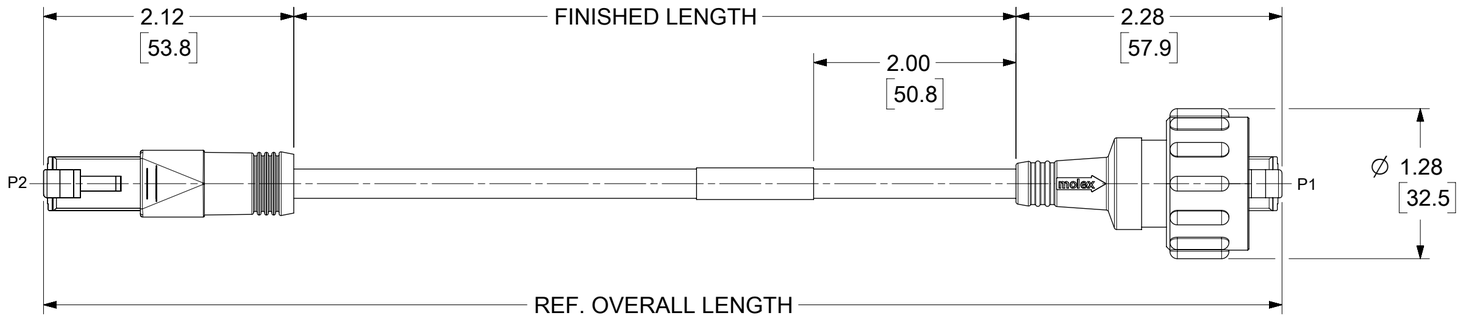

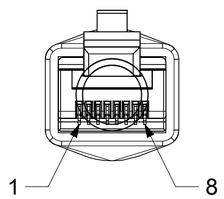

RJ-45 FACE VIEW
SCALE: 2X

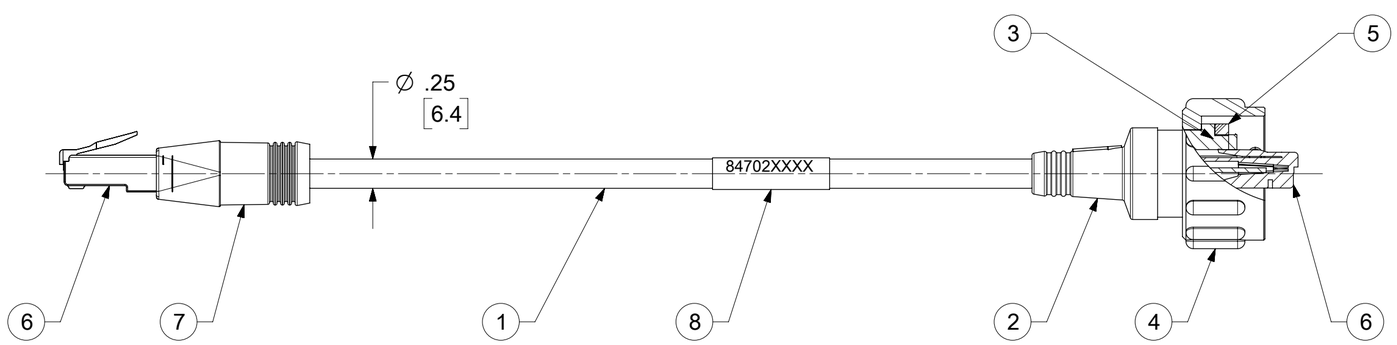

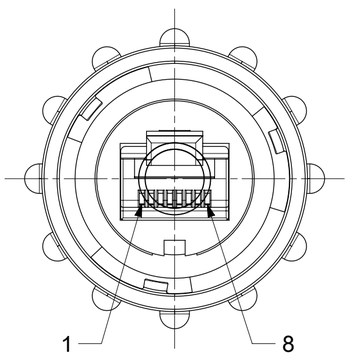

RJ-45 FACE VIEW
(BAYONET COUPLING)
SCALE: 2X

(L)

NOTES:
1. MATERIAL: AS NOTED
2. FINISH: AS NOTED
3. ELECTRICAL:
   VOLTAGE: 125V
   CURRENT: 1.5A
4. TEMP RATING: -20°C TO +80°C
5. PROTECTION: IP67 (WHEN MATED)
6. MATES WITH STANDARD & BAYONET STYLE RJ-45 JACK ASSEMBLIES.
7. ASSEMBLY IS ROHS COMPLIANT
8. ALL DIMS ARE FOR REFERENCE UNLESS TOLERANCED OR NOTED OTHERWISE

P2		P1
1	WHITE-ORANGE	1
2	ORANGE	2
3	WHITE-GREEN	3
4	BLUE	4
5	WHITE-BLUE	5
6	GREEN	6
7	WHITE-BROWN	7
8	BROWN	8

WIRE DIAGRAM
(TIA/EIA 568B)

ITEM	DESCRIPTION	MATERIAL	DESCRIPTION
8	WRAP LABEL	VINYL	BLACK/YELLOW
7	RJ-45 OVERMOLD	TPC	BLACK
6	RJ-45 PLUG, SHIELDED	PER VENDOR SPEC	GOLD PL. CONTACTS
5	GASKET SEAL	NITRILE	BLACK
4	RJ-45 COUPLING RING	PBT	BLACK
3	RJ-45 HOLDER	PBT	BLACK
2	OVERMOLD BODY	TPC	BLACK
1	#24-4 PAIR ENET CBL CAT 6	PVC JACKET	GRAY

THIS DRAWING CONTAINS INFORMATION THAT IS PROPRIETARY TO MOLEX ELECTRONIC TECHNOLOGIES, LLC AND SHOULD NOT BE USED WITHOUT WRITTEN PERMISSION

DIMENSION UNITS: INCH/MM | SCALE: 1:1

GENERAL TOLERANCES (UNLESS SPECIFIED)

	MM	INCH
4 PLACES	±	±
3 PLACES	±	±
2 PLACES	±	±
1 PLACE	±	±
0 PLACES	±	±
ANGULAR TOL	± °	

DRAFT WHERE APPLICABLE MUST REMAIN WITHIN DIMENSIONS

CURRENT REV DESC: REMOVED OBSOLETED PART NUMBER AS PER PCN#516685

EC NO: 830087
DRWN: PONNAM 2025/07/25
CHK'D: GGA 2025/08/05
APPR: GGA 2025/08/05

INITIAL REVISION:
DRWN: S GILBERT 2003/11/18
APPR: pwaltz 2003/11/19

THIRD ANGLE PROJECTION | DRAWING: C-SIZE | SERIES: 84702

molex

RJ45 CORD ASSEMBLY
MALE BAYONET TO MALE NO DRAIN WIRE

PRODUCT CUSTOMER DRAWING

DOCUMENT NUMBER	DOC TYPE	DOC PART	REVISION
SD-84702-002	PSD	001	L1

MATERIAL NUMBER	CUSTOMER	SHEET NUMBER
SEE MAT. NO CHART	GENERAL MARKET	1 OF 1

DOCUMENT STATUS	P1	RELEASE DATE	2025/08/05 13:02:03

FORMAT: Eng-lega-master-lb-prod-C
REVISION: E1
DATE: 2021/05/01