PART NO.	HOUSING SIZE	LOADED CKTS	TOOLED	PACKAGING	PICK & PLACE TAPE	A	B±0.15	C	D
85510-5020	8	8	YES	BLISTER ON REEL 13"	NO	15.24	8.89	10.77	14.40 +0.2 -0.4
85510-5120					YES				
85510-5028	8	8	YES	BLISTER ON REEL 22"	NO				
85510-5019	6	6	YES	BLISTER ON REEL 13"	NO	13.21	6.35	9.95	12.40 +0.2 -0.4
85510-5119					YES				
85510-5027	6	6	YES	BLISTER ON REEL 22"	NO				
85510-5018	6	4	YES	BLISTER ON REEL 13"	NO	13.21	3.81	9.95	12.40 +0.2 -0.4
85510-5118					YES				
85510-5017	4	4	YES	BLISTER ON REEL 13"	NO	11.18	3.81	8.40	10.40 +0.4 -0.2
85510-5117					YES				
85510-5025	4	4	YES	BLISTER ON REEL 22"	NO				

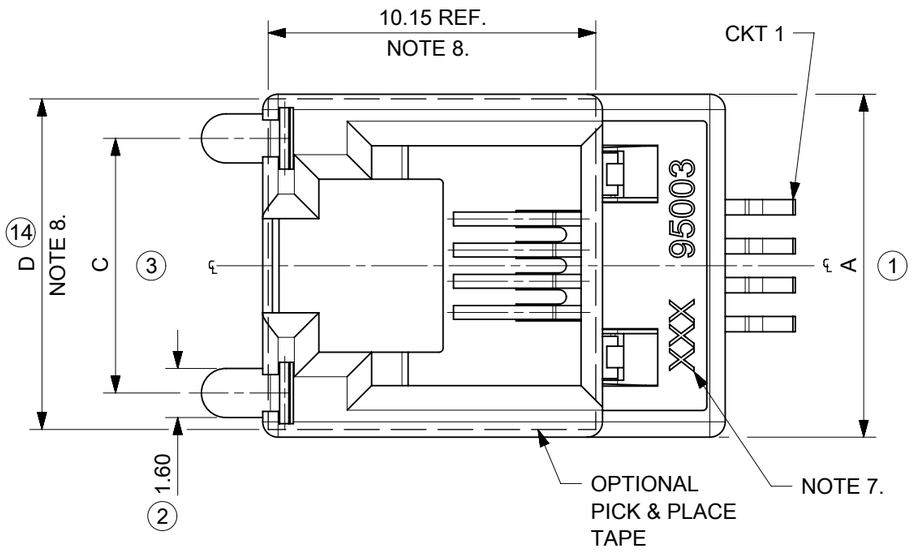

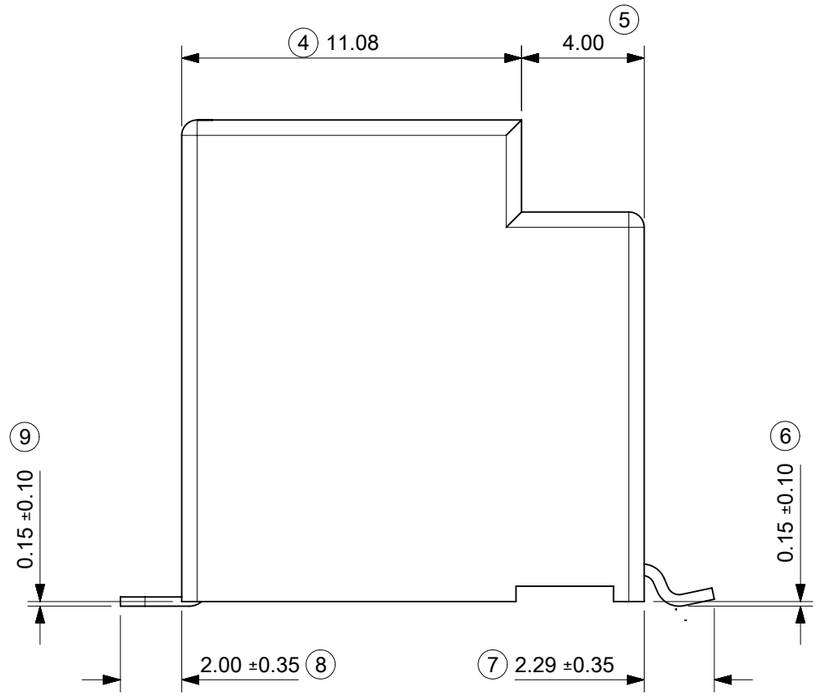

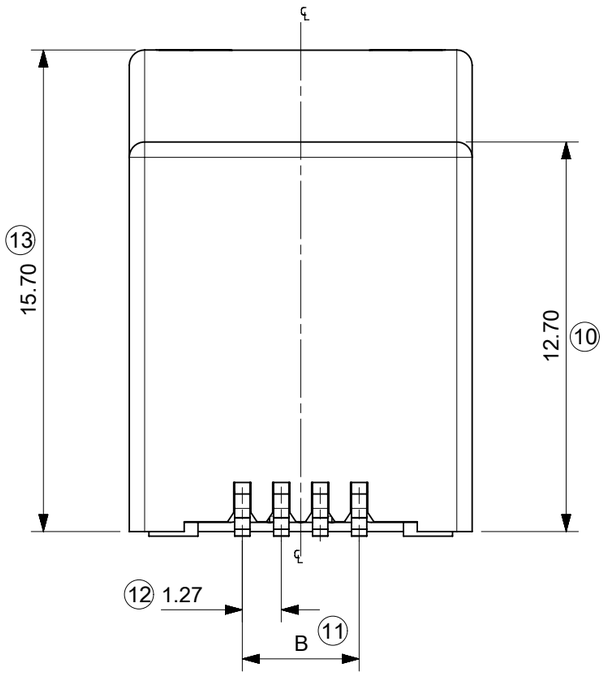

TECHNICAL SPECIFICATIONS:

1. MATERIAL:
   HOUSING: LCP FIBER GLASS FILLED UL 94-V0 COLOUR: BLACK
   TERMINAL: COPPER ALLOY PLATED WITH:
   BASE FINISH: NICKEL
   CONTACT SURFACE FINISH:
   GOLD
   OR
   GOLD FLASH OVER PALLADIUM NICKEL.
   EXCEEDS PRODUCT REQUIREMENTS BASED ON PS-95503-001

   SOLDER NAILS: COPPER ALLOY PLATED WITH TIN

2. JACK FOR MATING WITH IEC 60603-7 AND TIA-1096-A PLUGS (MOLEX 95075 SERIES).
3. PRODUCT SPECIFICATION: MOLEX PS-95503-001
4. APPLICATION SPECIFICATION: AS-85513-001
5. PACKAGING SPECIFICATION: PK-85510.
   SHEET 1 (TAPE ON REEL)
   SHEET 2 (BLISTER ON REEL 13")
   SHEET 3 (BLISTER ON REEL 22")
15. 6. COPLANARITY OF SIGNAL LEADS: 0.10 MAX.
7. MANUFACTURING I.D CAN BE EITHER MG, MXF, MXI OR MXCH.
8. PICK AND PLACE KAPTON AVAILABLE AS OPTION.

   LAST INSPECTION NO.: 15

PCB MOUNTING PATTERNS

(SEE FROM COMPONENT SIDE)
(SCALE 2:1)

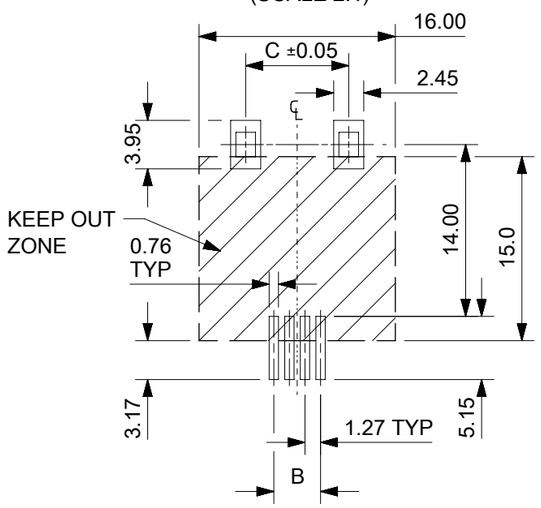

(ONLY 4/4 VERSION PADS SHOWN)
ALL DIMENSIONS REF DIMENSIONS

DOCUMENT STATUS	P1	RELEASE DATE	2022/01/12 15:19:47

THIS DRAWING CONTAINS INFORMATION THAT IS PROPRIETARY TO MOLEX ELECTRONIC TECHNOLOGIES, LLC AND SHOULD NOT BE USED WITHOUT WRITTEN PERMISSION

DIMENSION UNITS	SCALE
mm	5:1

GENERAL TOLERANCES (UNLESS SPECIFIED)

ANGULAR TOL	± 2.0 °
4 PLACES	±
3 PLACES	±
2 PLACES	± 0.15
1 PLACE	± 0.25
0 PLACES	±

DRAFT WHERE APPLICABLE MUST REMAIN WITHIN DIMENSIONS

CURRENT REV DESC: REMASTERED USING 3D MODELS

EC NO: 686836
DRWN: SANTHN 2021/05/20
CHK'D: KLANG 2022/01/12
APPR: KLANG 2022/01/12

INITIAL REVISION:
DRWN: DBYRNES 2007/01/22
APPR: EOMAHONY 2007/01/25

THIRD ANGLE PROJECTION | DRAWING: A3-SIZE | SERIES: 85510

molex

TOP ENTRY SMT JACKS
4/4 6/6 AND 8/8 POS. WITH SOLDER NAILS

PRODUCT CUSTOMER DRAWING

DOCUMENT NUMBER	DOC TYPE	DOC PART	REVISION
SD-85510-002	PSD	001	F2

MATERIAL NUMBER	CUSTOMER	SHEET NUMBER
	GENERAL MARKET	1 OF 1

FORMAT: master-tb-prod-A3
REVISION: J1
DATE: 2021/05/01