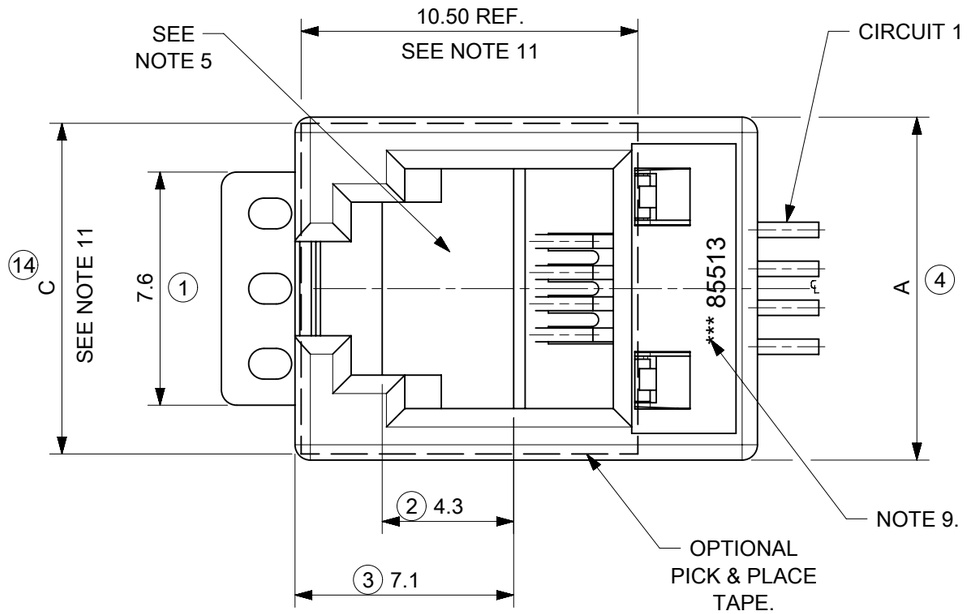

NOTES:

1. MATERIAL:
   HOUSING:LCP GLASS FILLED UL 94-V0, COLOUR BLACK,
   TERMINAL: COPPER ALLOY PLATED WITH:
   BASE FINISH: NICKEL
   CONTACT SURFACE FINISH:
   GOLD,
   OR
   GOLD FLASH OVER PALLADIUM NICKEL.
   EXCEEDS PRODUCT REQUIREMENTS BASED ON PS-85513-002
2. JACK FOR MATING WITH IEC 60603-7 AND TIA-1096-A
   PLUGS (MOLEX 90075 SERIES).
3. PRODUCT SPECIFICATION: PS-85513-002.
4. PACKAGING SPECIFICATION (SEE CHART SHEET2):
   PK-85513-001 SHEET 3 (BLISTER ON REEL 13")
   PK-85133-001 SHEET 1 (BLISTER ON REEL 15")
   PK-85513-001 SHEET 2 (BLISTER ON REEL 22")
5. FLAT SURFACE ON BOTH SIDES FOR PICK AND PLACE PURPOSE
13. COPLANARITY OF LEADS AND TABS: 0.10 MAX
7. SEE RECOMMENDED PCB LAYOUT ON SHEET 2
8. FOR DRAWING PURPOSE, ONLY 4/4 VERSION SHOWN.
9. MANUFACTURING I.D CAN BE EITHER MXF,MG, MXI OR MXCH.
10. APPLICATION SPEC AS-85513-001
11. OPTIONAL PICK & PLACE TAPE

LAST INSPECTION NO.: 14

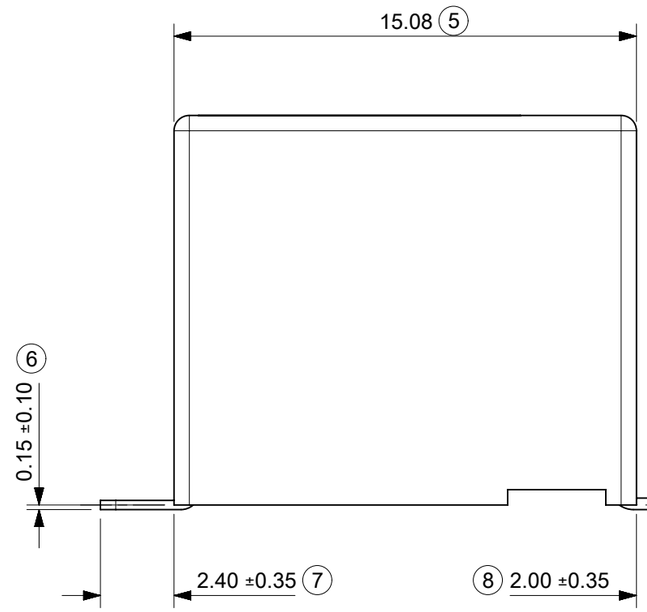

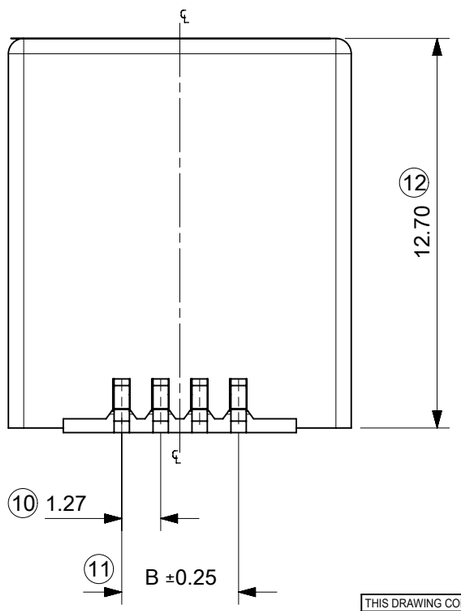

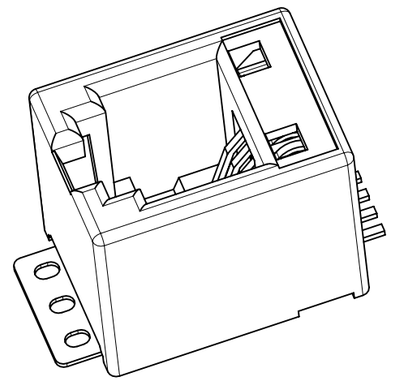

ISOMETRIC VIEW
(NOT SCALED)

THIS DRAWING CONTAINS INFORMATION THAT IS PROPRIETARY TO MOLEX ELECTRONIC TECHNOLOGIES, LLC AND SHOULD NOT BE USED WITHOUT WRITTEN PERMISSION

DIMENSION UNITS	SCALE
mm	5:1

GENERAL TOLERANCES (UNLESS SPECIFIED)

ANGULAR TOL	±	2.0 °
4 PLACES	±	
3 PLACES	±	
2 PLACES	±	0.15
1 PLACE	±	0.25
0 PLACES	±	

DRAFT WHERE APPLICABLE MUST REMAIN WITHIN DIMENSIONS

CURRENT REV DESC: REMASTERED USING 3D MODELS

EC NO: 686842
DRWN: AKUMAR19 2021/08/11
CHK'D: KLANG 2022/01/17
APPR: KLANG 2022/01/17

INITIAL REVISION:
DRWN: DBYRNES 2006/08/21
APPR: EOMAHONY 2006/09/07

molex

LOW PROFILE TOP ENTRY
TRUE SMT JACK WITH P&P SURFACE(SHORT VERSION)

PRODUCT CUSTOMER DRAWING

DOCUMENT NUMBER	DOC TYPE	DOC PART	REVISION
SD-85513-010	PSD	001	H3

THIRD ANGLE PROJECTION	DRAWING	SERIES	MATERIAL NUMBER	CUSTOMER	SHEET NUMBER
	A3-SIZE	85513	SEE CHART	GENERAL MARKET	1 OF 2

DOCUMENT STATUS	P1	RELEASE DATE	2022/01/17 14:47:37

FORMAT: master-lib-prod-A3
REVISION: J
DATE: 2020/01/14

RECOMMENDED PCB LAYOUTS
(SEE FROM COMPONENT SIDE)

TOP ENTRY CONFIGURATION

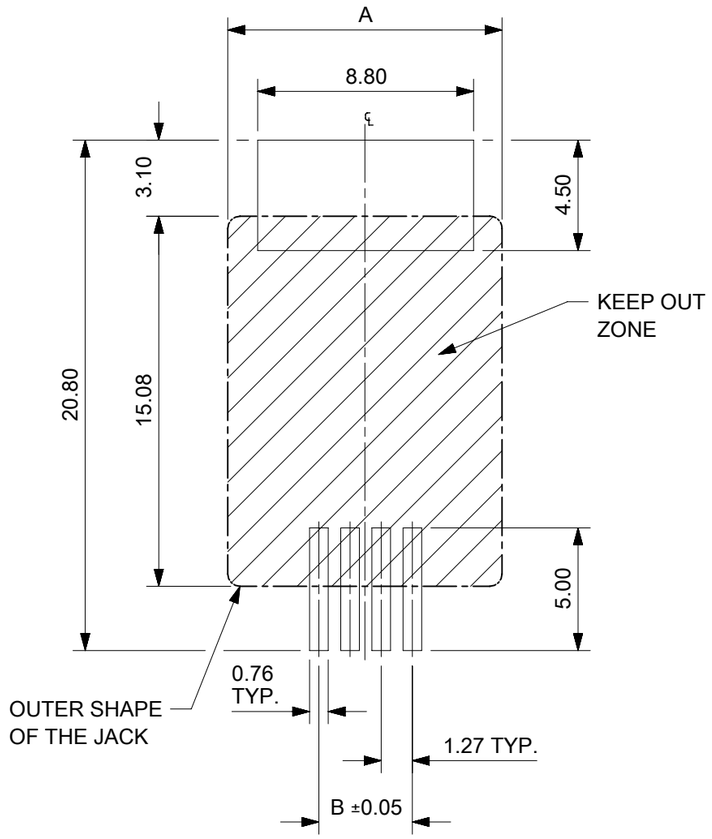

(ONLY 4/4 VERSION PADS SHOWN)
ALL DIMENSIONS REF DIMENSIONS

PART NO.	PICK & PLACE TAPE	HOUSING SIZE	LOADED CKTS	TOOLED	A	B	C	PACKAGING	PACKAGING SPEC.
85513-5013	NO	8	8	YES	15.24	8.89	14.40 +.2 -.4	BLISTER ON REEL 13"	PK-85513-001 SHEET 3
85513-5113	YES								
85513-5001	NO			YES				BLISTER ON REEL 15"	PK-85513-001 SHEET 1
85513-5009	NO			YES				BLISTER ON REEL 22"	PK-85513-001 SHEET 2
85513-5109	YES								
85513-5014	NO	6	6	YES	13.21	6.35	12.40 +.2 -.4	BLISTER ON REEL 13"	PK-85513-001 SHEET 3
85513-5114	YES								
85513-5002	NO			YES				BLISTER ON REEL 15"	PK-85513-001 SHEET 1
85513-5010	NO			YES				BLISTER ON REEL 22"	PK-85513-001 SHEET 2
85513-5015	NO	6	4	YES	13.21	3.81	12.40 +.2 -.4	BLISTER ON REEL 13"	PK-85513-001 SHEET 3
85513-5115	YES								
85513-5016	NO	4	4	YES	11.18	3.81	10.40 +.4 -.2	BLISTER ON REEL 13"	PK-85513-001 SHEET 3
85513-5116	YES								
85513-5004	NO			YES				BLISTER ON REEL 15"	PK-85513-001 SHEET 1
85513-5012	NO			YES				BLISTER ON REEL 22"	PK-85513-001 SHEET 2

THIS DRAWING CONTAINS INFORMATION THAT IS PROPRIETARY TO MOLEX ELECTRONIC TECHNOLOGIES, LLC AND SHOULD NOT BE USED WITHOUT WRITTEN PERMISSION

DIMENSION UNITS	mm
SCALE	1:1
GENERAL TOLERANCES (UNLESS SPECIFIED)	
ANGULAR TOL	± 2.0 °
4 PLACES	±
3 PLACES	±
2 PLACES	± 0.15
1 PLACE	± 0.25
0 PLACES	±
DRAFT WHERE APPLICABLE MUST REMAIN WITHIN DIMENSIONS	

CURRENT REV DESC: REMASTERED USING 3D MODELS

EC NO: 686842
DRWN: AKUMAR19 2021/08/11
CHK'D: KLANG 2022/01/17
APPR: KLANG 2022/01/17

INITIAL REVISION:
DRWN: DBYRNES 2006/08/21
APPR: EOMAHONY 2006/09/07

THIRD ANGLE PROJECTION | DRAWING: A3-SIZE | SERIES: 85513

molex

LOW PROFILE TOP ENTRY
TRUE SMT JACK WITH P&P SURFACE(SHORT VERSION)

PRODUCT CUSTOMER DRAWING

DOCUMENT NUMBER	DOC TYPE	DOC PART	REVISION
SD-85513-010	PSD	001	H3

MATERIAL NUMBER	CUSTOMER	SHEET NUMBER
SEE CHART	GENERAL MARKET	2 OF 2

DOCUMENT STATUS	P1	RELEASE DATE	2022/01/17 14:47:37

FORMAT: master-lb-prod-A3
REVISION: J
DATE: 2020/01/14