FEATURES SELECTION GUIDE

CIRCUIT SIZE	FEATURES				
	FRICTION LOCKS		③ DUAL SIDE SLOTS	④ CENTER POLARIZATION	SHEET NO
	① DUAL	② CENTER			
4 TO 6	N.A	N.A	YES	N.A	2 - 3
	N.A	YES	YES	N.A	
8 TO 12	N.A	N.A	YES	YES	4 - 5
	N.A	YES	YES	N.A	
14 TO 50	YES	N.A	YES	YES	6 - 9
	N.A	N.A	YES	YES	

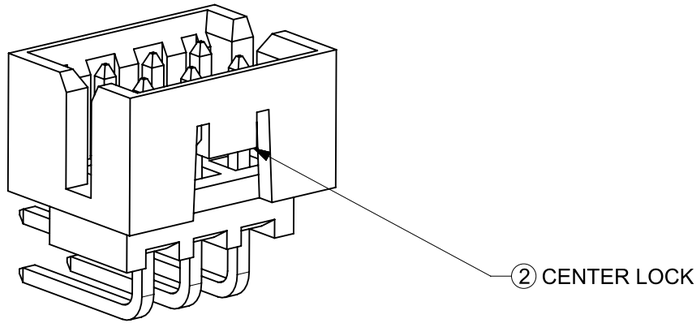

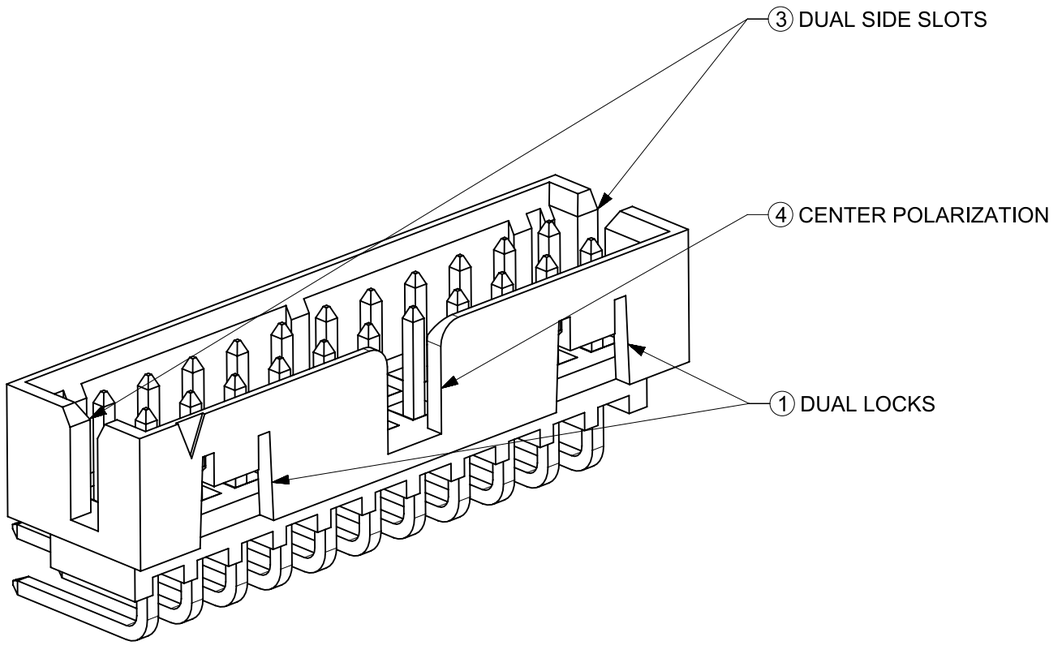

PACKAGING SPECIFICATION TABLE

TAPE AND REEL PACKAGING	PK-87831-300
TUBE STANDARD PACKAGING	PK-87831-001
TUBE NON-STANDARD PACKAGING FOR: 87833-0861 87833-1420	PK-87831-002

THIS DRAWING CONTAINS INFORMATION THAT IS PROPRIETARY TO MOLEX ELECTRONIC TECHNOLOGIES, LLC AND SHOULD NOT BE USED WITHOUT WRITTEN PERMISSION

FUNCTIONAL SYMBOLS: FA = 0, FC = 0, FP = 0

DIVISIONAL SYMBOLS

DIMENSION UNITS	SCALE
mm	5:1

GENERAL TOLERANCES (UNLESS SPECIFIED)

ANGULAR TOL	± 3°
4 PLACES	±
3 PLACES	±
2 PLACES	± 0.200
1 PLACE	±
0 PLACES	±

DRAFT WHERE APPLICABLE MUST REMAIN WITHIN DIMENSIONS

CURRENT REV DESC: Adding New Part Numbers

STATUS: Production

DRWN:	Meghraj Boodagatti	2026-06-03
CHK'D:	Meghraj Boodagatti	2026-06-10
APPR:	Saravanakumar Murugesan	2026-06-10

THIRD ANGLE PROJECTION | DRAWING: A3-SIZE | SERIES: 87833

molex

MILLIGRID, 2MM PITCH
SHROUDED HEADER R/A, THROUGH HOLE

PRODUCT CUSTOMER DRAWING

DOCUMENT NUMBER	DOC TYPE	DOC PART	REVISION
SD-87833-0001	PSD	001	A15

MATERIAL NUMBER	CUSTOMER	SHEET NUMBER
SEE TABLE	GENERAL MARKET	1 OF 9

4 TO 6 CIRCUITS

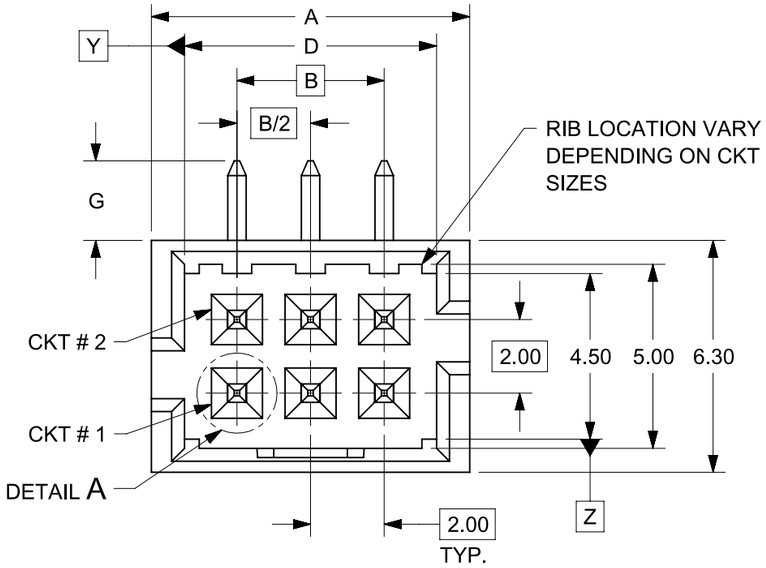

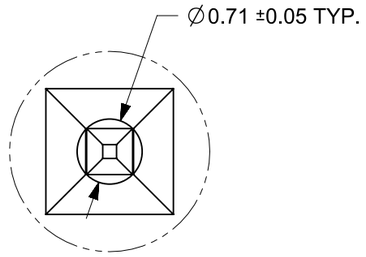

DETAIL A

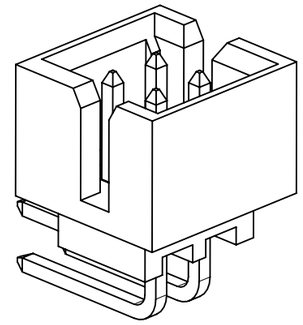

ISO VIEW OF HEADER
DUAL SIDE SLOTS

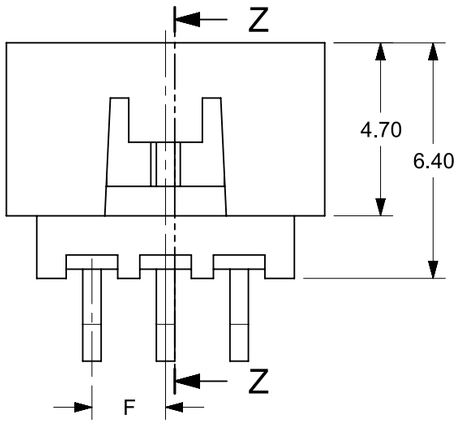

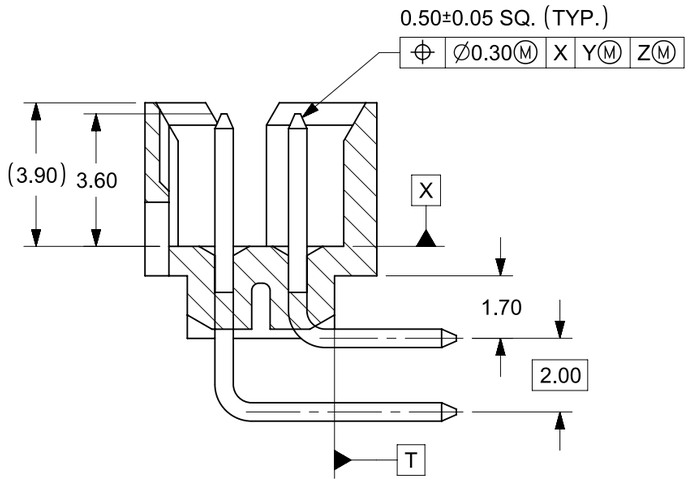

SECTION Z-Z

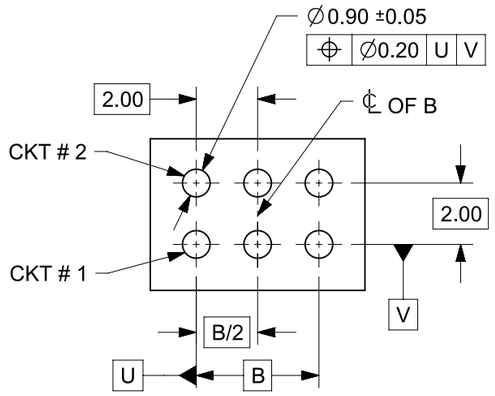

RECOMMENDED PCB LAYOUT

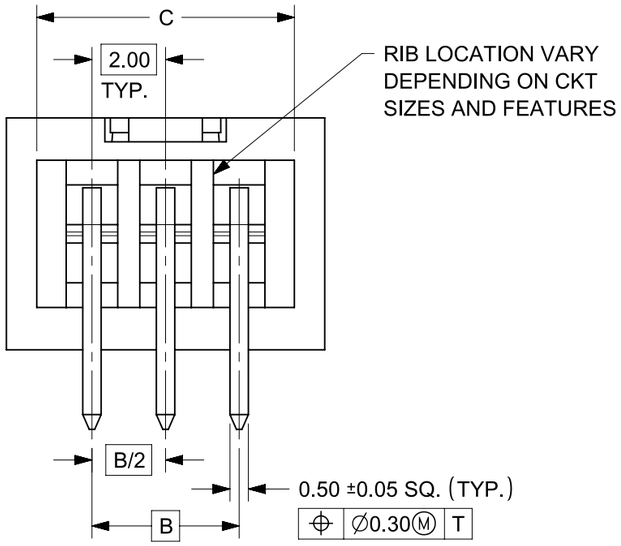

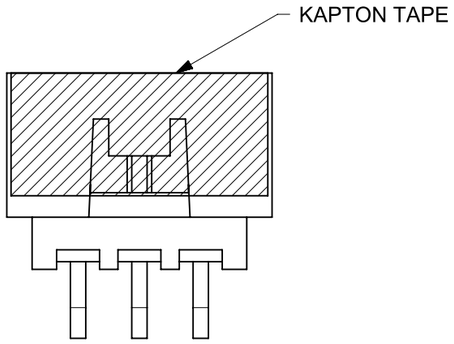

NOTES:
1. MATERIALS:
   HOUSING: 30% GF, NYLON, UL94V-0, COLOR: BLACK.
   PIN: 0.50mm SQ. PHOSPHOR BRONZE.
2. FINISHES: REFER TO PLATING OPTIONS.
3. PRODUCT SPECIFICATION: PS-87831-027
4. PACKAGING SPECIFICATION: SEE PACKAGING SPECS TABLE ON SHEET 1
5. MATES WITH: A. MOLEX CRIMP RECEPTACLE HOUSING: 51110 SERIES AND CRIMP TERMINAL: 50394 SERIES.
   B. MOLEX 2MM MILLIGRID DUAL ROW IDT: 87568 SERIES.
   C. MOLEX 2MM MILLIGRID DUAL ROW RECEPTACLE: 79107 (GOLD PLATED), 78787 (TIN PLATED)
6. FOR ILLUSTRATION PURPOSE, 6 CIRCUITS HEADER IS SHOWN.

FUNCTIONAL SYMBOLS	THIS DRAWING CONTAINS INFORMATION THAT IS PROPRIETARY TO MOLEX ELECTRONIC TECHNOLOGIES, LLC AND SHOULD NOT BE USED WITHOUT WRITTEN PERMISSION			
F_A = 0	DIMENSION UNITS: mm	SCALE: 5:1	CURRENT REV DESC: Adding New Part Numbers	molex
F_C = 0	GENERAL TOLERANCES (UNLESS SPECIFIED)			MILLIGRID, 2MM PITCH SHROUDED HEADER R/A, THROUGH HOLE
F_P = 0	ANGULAR TOL ± 3°			
DIVISIONAL SYMBOLS	4 PLACES ±			PRODUCT CUSTOMER DRAWING
	3 PLACES ±		STATUS: Production	
	2 PLACES ± 0.200		DRWN: Meghraj Boodagatti 2026-06-03	DOCUMENT NUMBER: SD-87833-0001
	1 PLACE ±		CHK'D: Meghraj Boodagatti 2026-06-10	DOC TYPE: PSD; DOC PART: 001; REVISION: A15
	0 PLACES ±		APPR: Saravanakumar Murugesan 2026-06-10	
	DRAFT WHERE APPLICABLE MUST REMAIN WITHIN DIMENSIONS	THIRD ANGLE PROJECTION	DRAWING: A3-SIZE; SERIES: 87833	MATERIAL NUMBER: SEE TABLE; CUSTOMER: GENERAL MARKET; SHEET NUMBER: 2 OF 9

FORMAT: TC-0-cmf-A3
REVISION: B
DATE: 2022/08/01

4 TO 6 CIRCUITS

CKT SIZE	ASSY. P/N WITHOUT KAPTON IN TUBE	ASSY. P/N WITH KAPTON IN TUBE	ASSY. P/N WITH KAPTON IN T&R	PLATING OPTIONS	FRICTION LOCKS		DUAL SIDE SLOTS	CENTER POLARIZATION	DIMENSION						
					DUAL	CENTER			A	B	C	D	E	F	G (SOLDER TAIL)
4	87833-0419	N.A	N.A	1	N.A	N.A	YES	N.A	6.65	2.00	5.00	4.85	N.A	N.A	2.16
	87833-0420	N.A	N.A	2											
	87833-0421	N.A	N.A	3											
	87833-5920	N.A	N.A	2	N.A	N.A	YES	N.A						N.A	3.18
	87833-0431	87833-0441	87833-0451	2	N.A	YES	YES	N.A						1.00	2.16
	87833-0432	N.A	N.A	3											
	87833-0461	N.A	N.A	2	N.A	YES	YES	N.A						1.00	3.18
6	87833-0619	N.A	N.A	1	N.A	N.A	YES	N.A	8.65	4.00	7.00	6.85	N.A	N.A	2.16
	87833-0620	N.A	87833-0626	2											
	87833-0621	N.A	N.A	3											
	87833-6420	N.A	N.A	2	N.A	N.A	YES	N.A						N.A	3.18
	87833-0631	87833-0641	87833-0651	2	N.A	YES	YES	N.A						2.00	2.16
	87833-0632	N.A	N.A	3											
	87833-0661	N.A	N.A	2	N.A	YES	YES	N.A						2.00	3.18
	87833-0624	N.A	N.A	2	N.A	N.A	YES	N.A						N.A	2.92
	87833-0625	N.A	N.A	3											

PLATING OPTIONS:

1 - 0.05-0.13µm/2-5µin GOLD IN CONTACT AREA AND
1.88µm/75µin MIN. MATTE TIN IN SOLDER TAIL AREA OVER
1.27µm/50µin MIN. NICKEL OVERALL.

2 - 0.38µm/15µin MIN. GOLD IN CONTACT AREA AND
1.88µm/75µin MIN. MATTE TIN IN SOLDER TAIL AREA OVER
1.27µm/50µin MIN. NICKEL OVERALL.

3 - 0.76µm/30µin MIN. GOLD IN CONTACT AREA AND
1.88µm/75µin MIN. MATTE TIN IN SOLDER TAIL AREA OVER
1.27µm/50µin MIN. NICKEL OVERALL.

THIS DRAWING CONTAINS INFORMATION THAT IS PROPRIETARY TO MOLEX ELECTRONIC TECHNOLOGIES, LLC AND SHOULD NOT BE USED WITHOUT WRITTEN PERMISSION

FUNCTIONAL SYMBOLS: FA = 0, FC = 0, FP = 0

DIVISIONAL SYMBOLS

DIMENSION UNITS: mm | SCALE: 1:1

GENERAL TOLERANCES (UNLESS SPECIFIED)
ANGULAR TOL ± 3°
4 PLACES ±
3 PLACES ±
2 PLACES ± 0.200
1 PLACE ±
0 PLACES ±

DRAFT WHERE APPLICABLE MUST REMAIN WITHIN DIMENSIONS

CURRENT REV DESC: Adding New Part Numbers

STATUS: Production
DRWN: Meghraj Boodagatti 2026-06-03
CHK'D: Meghraj Boodagatti 2026-06-10
APPR: Saravanakumar Murugesan 2026-06-10

THIRD ANGLE PROJECTION | DRAWING: A3-SIZE | SERIES: 87833

molex

MILLIGRID, 2MM PITCH
SHROUDED HEADER R/A, THROUGH HOLE

PRODUCT CUSTOMER DRAWING

DOCUMENT NUMBER	DOC TYPE	DOC PART	REVISION
SD-87833-0001	PSD	001	A15

MATERIAL NUMBER	CUSTOMER	SHEET NUMBER
SEE TABLE	GENERAL MARKET	3 OF 9

FORMAT: TC-0-cm-A3
REVISION: B
DATE: 2022/08/01

8 TO 12 CIRCUITS

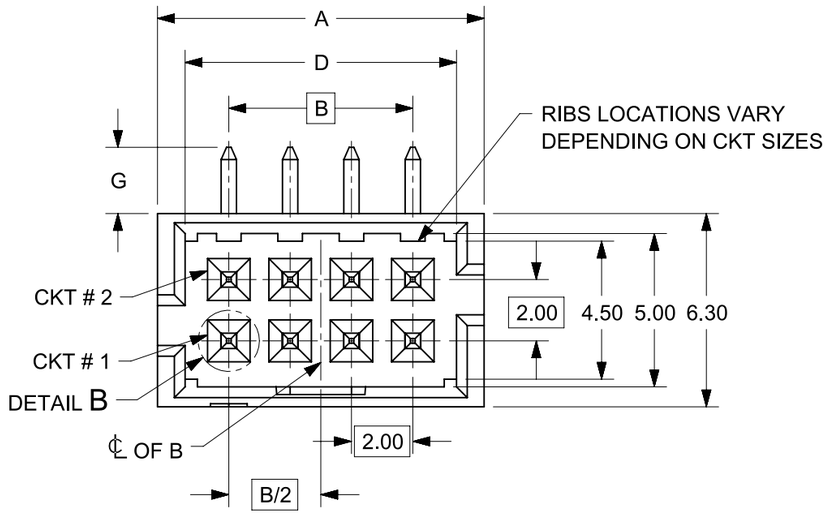

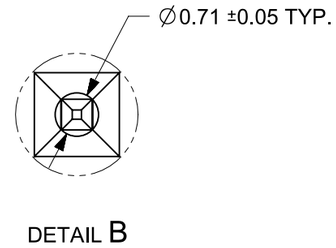

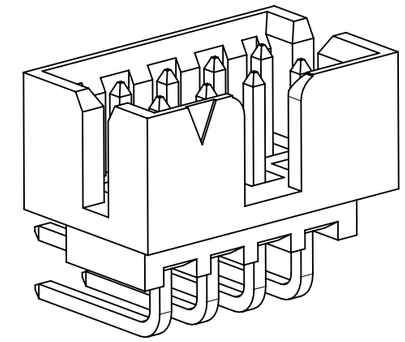

ISO VIEW OF HEADER WITH CENTER POLARIZATION AND DUAL SIDE SLOTS

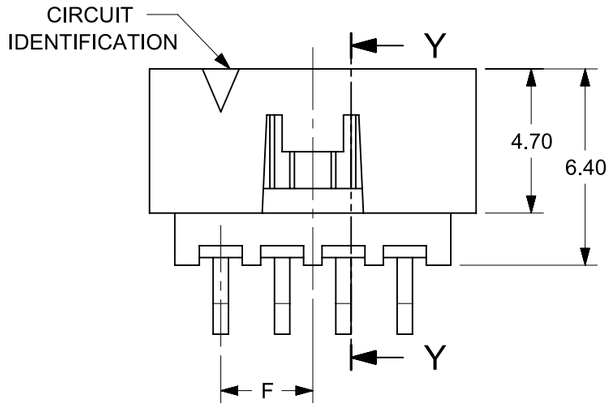

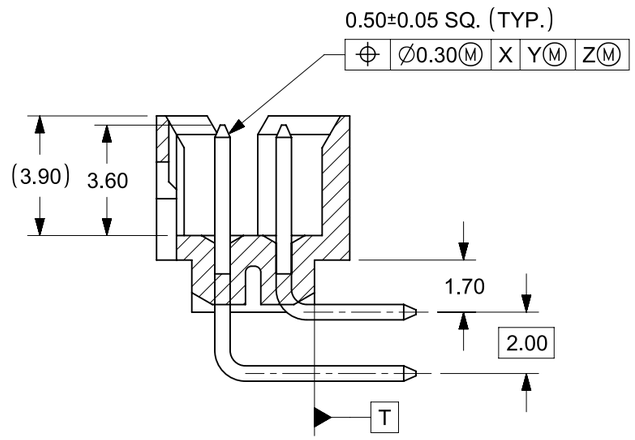

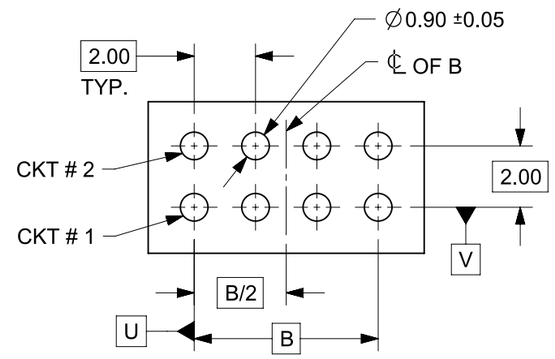

RECOMMENDED PCB LAYOUT

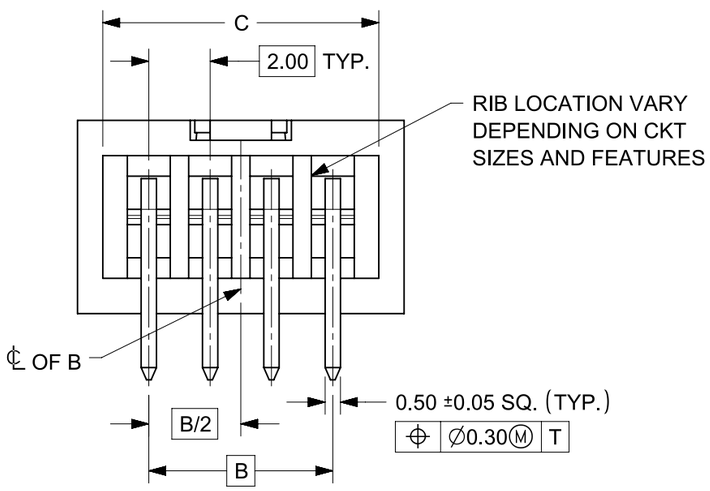

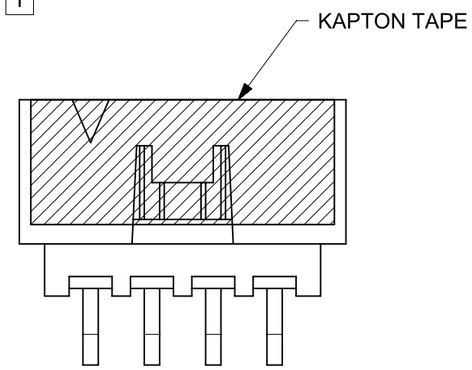

NOTES:
1. MATERIALS:
   HOUSING: 30% GF, NYLON, UL94V-0, COLOR: BLACK
   PIN: 0.50mm SQ. PHOSPHOR BRONZE.
2. FINISHES: REFER TO PLATING OPTIONS.
3. PRODUCT SPECIFICATION: PS-87831-027
4. PACKAGING SPECIFICATION: SEE PACKAGING SPECS TABLE ON SHEET 1
5. MATES WITH: A. MOLEX CRIMP RECEPTACLE HOUSING: 51110 SERIES AND CRIMP TERMINAL: 50394 SERIES.
   B. MOLEX 2mm MILLIGRID DUAL ROW IDT: 87568 SERIES.
   C. MOLEX 2mm MILLIGRID DUAL ROW RECEPTACLE: 79107 (GOLD PLATED), 78787 (TIN PLATED)
6. FOR ILLUSTRATION PURPOSE, 8 CIRCUIT HEADER IS SHOWN.

THIS DRAWING CONTAINS INFORMATION THAT IS PROPRIETARY TO MOLEX ELECTRONIC TECHNOLOGIES, LLC AND SHOULD NOT BE USED WITHOUT WRITTEN PERMISSION

FUNCTIONAL SYMBOLS	DIMENSION UNITS	SCALE	CURRENT REV DESC: Adding New Part Numbers	molex
FA = 0	mm	5:1		
FC = 0	GENERAL TOLERANCES (UNLESS SPECIFIED)			MILLIGRID, 2MM PITCH SHROUDED HEADER R/A, THROUGH HOLE
FP = 0	ANGULAR TOL ± 3°			
DIVISIONAL SYMBOLS	4 PLACES ±			PRODUCT CUSTOMER DRAWING
	3 PLACES ±		STATUS: Production	
	2 PLACES ± 0.200		DRWN: Meghraj Boodagatti 2026-06-03	DOCUMENT NUMBER: SD-87833-0001 · DOC TYPE: PSD · DOC PART: 001 · REVISION: A15
	1 PLACE ±		CHK'D: Meghraj Boodagatti 2026-06-10	
	0 PLACES ±		APPR: Saravanakumar Murugesan 2026-06-10	
	DRAFT WHERE APPLICABLE MUST REMAIN WITHIN DIMENSIONS		THIRD ANGLE PROJECTION · DRAWING: A3-SIZE · SERIES: 87833	MATERIAL NUMBER: SEE TABLE · CUSTOMER: GENERAL MARKET · SHEET NUMBER: 4 OF 9

FORMAT: TC-Dr-cm-A3
REVISION: B
DATE: 2022/08/01

8 TO 12 CIRCUITS

CKT SIZE	ASSY. P/N WITHOUT KAPTON IN TUBE	ASSY. P/N WITH KAPTON IN TUBE	ASSY. P/N WITH KAPTON IN T&R	PLATING OPTIONS	FRICTION LOCKS		DUAL SIDE SLOTS	CENTER POLARIZATION	DIMENSION						
					DUAL	CENTER			A	B	C	D	E	F	G (SOLDER TAIL)
8	87833-0819	N.A	N.A	1	N.A	N.A	YES	YES	10.65	6.00	9.00	8.85	N.A	N.A	2.16
	87833-0820	N.A	N.A	2											
	87833-0821	N.A	87833-7621	3											
	87833-6320	N.A	N.A	2	N.A	N.A	YES	YES						N.A	3.18
	87833-6321	N.A	N.A	3											
	87833-0831	87833-0841	87833-0851	2	N.A	YES	YES	N.A						3.00	2.16
	87833-0832	N.A	N.A	3											
	87833-0861	N.A	N.A	2	N.A	YES	YES	N.A						3.00	3.18
	87833-0824	N.A	N.A	2	N.A	N.A	YES	YES						N.A	2.92
	87833-0825	N.A	N.A	3											
10	87833-1019	N.A	N.A	1	N.A	N.A	YES	YES	12.65	8.00	11.00	10.85	N.A	N.A	2.16
	87833-1020	N.A	87833-1026	2											
	87833-1021	N.A	N.A	3											
	87833-1031	N.A	87833-1027	2	N.A	YES	YES	N.A						4.00	2.16
	87833-1032	N.A	N.A	3											
	N.A	87833-1041	87833-1051	2	N.A	YES	YES	N.A						4.00	1.70
	87833-1024	N.A	N.A	2	N.A	N.A	YES	YES						N.A	2.92
	87833-1025	N.A	N.A	3											
12	87833-1219	N.A	N.A	1	N.A	N.A	YES	YES	14.65	10.00	13.00	12.85	N.A	N.A	2.16
	87833-1220	N.A	87833-1240	2											
	87833-1221	N.A	N.A	3											
	87833-6020	N.A	N.A	2	N.A	N.A	YES	YES						N.A	3.18
	87833-1231	N.A	N.A	2	N.A	YES	YES	N.A						5.00	2.16
	87833-1232	N.A	N.A	3											
	87833-1224	N.A	N.A	2	N.A	N.A	YES	YES						N.A	2.92
	87833-1225	N.A	N.A	3											

PLATING OPTIONS:

1 - 0.05-0.13µm/2-5µin GOLD IN CONTACT AREA AND 1.88µm/75µin MIN. MATTE TIN IN SOLDER TAIL AREA OVER 1.27µm/50µin MIN. NICKEL OVERALL.

2 - 0.38µm/15µin MIN. GOLD IN CONTACT AREA AND 1.88µm/75µin MIN. MATTE TIN IN SOLDER TAIL AREA OVER 1.27µm/50µin MIN. NICKEL OVERALL.

3 - 0.76µm/30µin MIN. GOLD IN CONTACT AREA AND 1.88µm/75µin MIN. MATTE TIN IN SOLDER TAIL AREA OVER 1.27µm/50µin MIN. NICKEL OVERALL.

THIS DRAWING CONTAINS INFORMATION THAT IS PROPRIETARY TO MOLEX ELECTRONIC TECHNOLOGIES, LLC AND SHOULD NOT BE USED WITHOUT WRITTEN PERMISSION

FUNCTIONAL SYMBOLS: FA = 0, FC = 0, FP = 0

DIVISIONAL SYMBOLS

DIMENSION UNITS: mm | SCALE: 1:1

GENERAL TOLERANCES (UNLESS SPECIFIED)

ANGULAR TOL	± 3°
4 PLACES	±
3 PLACES	±
2 PLACES	± 0.200
1 PLACE	±
0 PLACES	±

DRAFT WHERE APPLICABLE MUST REMAIN WITHIN DIMENSIONS

CURRENT REV DESC: Adding New Part Numbers

STATUS: Production

DRWN: Meghraj Boodagatti 2026-06-03

CHK'D: Meghraj Boodagatti 2026-06-10

APPR: Saravanakumar Murugesan 2026-06-10

THIRD ANGLE PROJECTION | DRAWING: A3-SIZE | SERIES: 87833

molex

MILLIGRID, 2MM PITCH
SHROUDED HEADER R/A, THROUGH HOLE

PRODUCT CUSTOMER DRAWING

DOCUMENT NUMBER	DOC TYPE	DOC PART	REVISION
SD-87833-0001	PSD	001	A15

MATERIAL NUMBER	CUSTOMER	SHEET NUMBER
SEE TABLE	GENERAL MARKET	5 OF 9

FORMAT: TC-A1-LA3
REVISION: B
DATE: 2022/08/01

14 TO 50 CIRCUITS

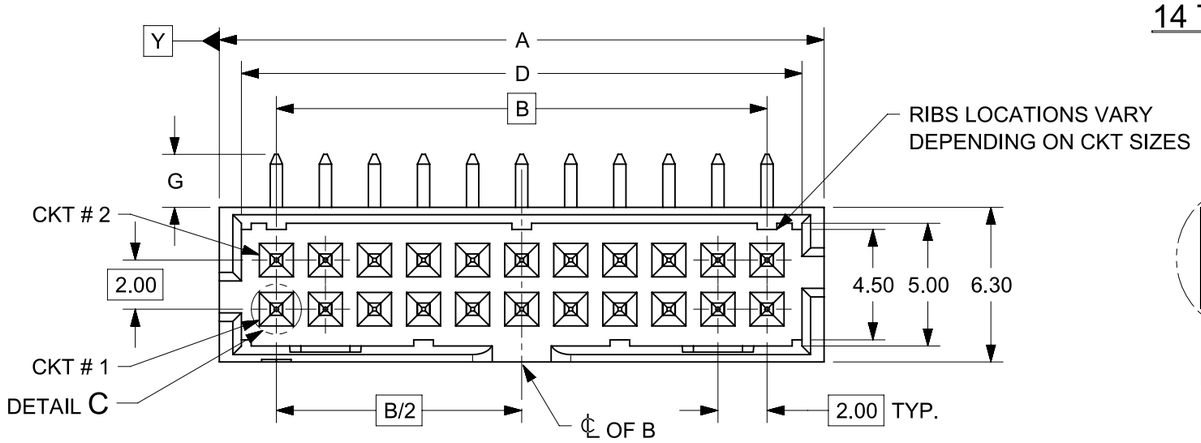

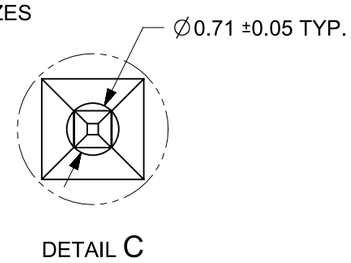

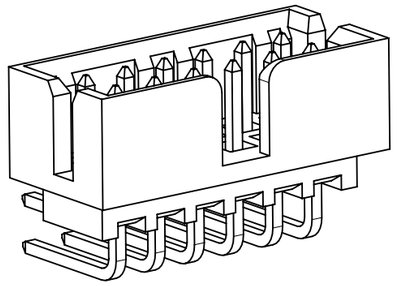

ISO VIEW OF HEADER WITH CENTER
POLARIZATION AND DUAL SIDE SLOTS

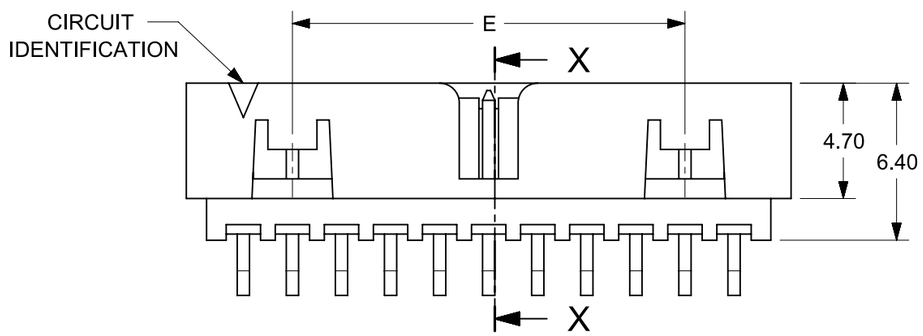

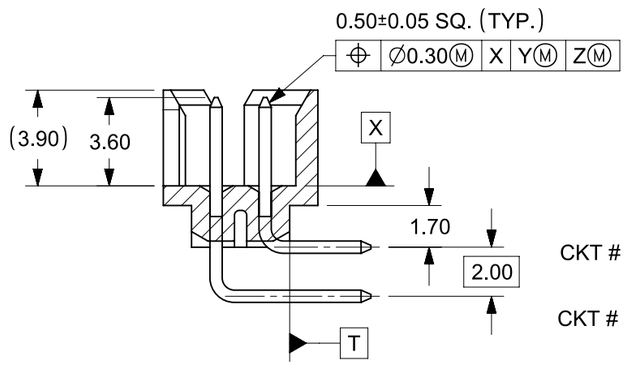

SECTION X-X

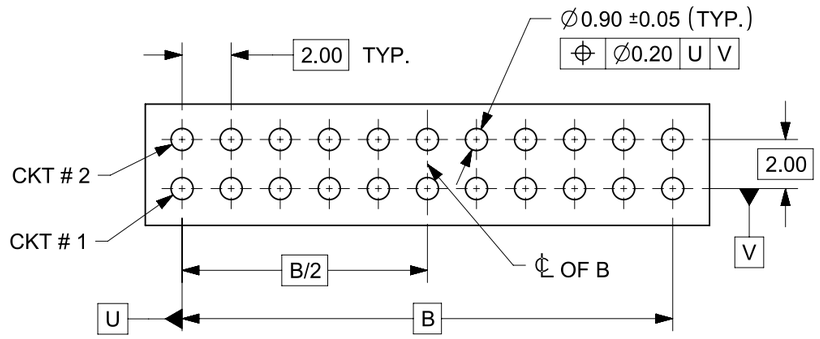

RECOMMENDED PCB LAYOUT

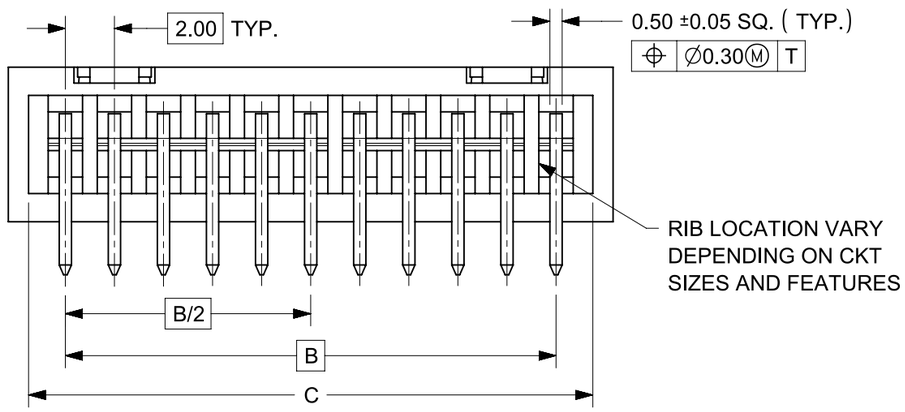

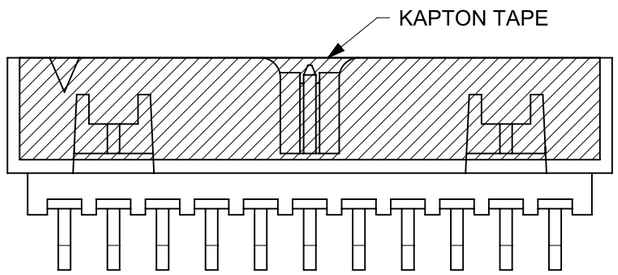

NOTES:
1. MATERIALS:
   HOUSING: 30% GF, NYLON, UL94V-0, COLOR: BLACK.
   PIN: 0.50mm SQ PHOSPHOR BRONZE.
2. FINISHES: REFER TO PLATING OPTIONS.
3. PRODUCT SPECIFICATION: PS-87831-027
4. PACKAGING SPECIFICATION: SEE PACKAGING SPECS TABLE ON SHEET 1
5. MATES WITH: A. MOLEX CRIMP RECEPTACLE HOUSING: 51110 SERIES
   AND CRIMP TERMINAL: 50394 SERIES.
   B. MOLEX 2mm MILLIGRID DUAL ROW IDT: 87568 SERIES.
   C. MOLEX 2mm MILLIGRID DUAL ROW RECEPTACLE:
   79107 (GOLD PLATED), 78787 (TIN PLATED)
6. FOR ILLUSTRATION PURPOSE, 22 CIRCUITS HEADER IS SHOWN.

THIS DRAWING CONTAINS INFORMATION THAT IS PROPRIETARY TO MOLEX ELECTRONIC TECHNOLOGIES, LLC AND SHOULD NOT BE USED WITHOUT WRITTEN PERMISSION

FUNCTIONAL SYMBOLS	DIMENSION UNITS	SCALE	CURRENT REV DESC: Adding New Part Numbers	molex
FA = 0	mm	5:1		
FC = 0	GENERAL TOLERANCES (UNLESS SPECIFIED)			MILLIGRID, 2MM PITCH SHROUDED HEADER R/A, THROUGH HOLE
FP = 0	ANGULAR TOL ± 3°			
DIVISIONAL SYMBOLS	4 PLACES ±			PRODUCT CUSTOMER DRAWING
	3 PLACES ±			
	2 PLACES ± 0.200		STATUS: Production	DOCUMENT NUMBER: SD-87833-0001
	1 PLACE ±		DRWN: Meghraj Boodagatti 2026-06-03	DOC TYPE: PSD; DOC PART: 001; REVISION: A15
	0 PLACES ±		CHK'D: Meghraj Boodagatti 2026-06-10	
			APPR: Saravanakumar Murugesan 2026-06-10	
	DRAFT WHERE APPLICABLE MUST REMAIN WITHIN DIMENSIONS		THIRD ANGLE PROJECTION; DRAWING: A3-SIZE; SERIES: 87833	MATERIAL NUMBER: SEE TABLE; CUSTOMER: GENERAL MARKET; SHEET NUMBER: 6 OF 9

FORMAT: TC-0-cont-A3
REVISION: B
DATE: 2022/08/01

14 TO 24 CIRCUITS

CKT SIZE	ASSY. P/N WITHOUT KAPTON IN TUBE	ASSY. P/N WITH KAPTON IN TUBE	ASSY. P/N WITH KAPTON IN T&R	ASSY. P/N WITHOUT KAPTON IN T&R	PLATING OPTIONS	FRICTION LOCKS		DUAL SIDE SLOTS	CENTER POLARIZATION	DIMENSION						
						DUAL	CENTER			A	B	C	D	E	F	G (SOLDER TAIL)
14	87833-1419	N.A	N.A	N.A	1	YES	N.A	YES	YES	16.65	12.00	15.00	14.85	8.00	N.A	2.16
	87833-1420	N.A	N.A	N.A	2											
	87833-1421	N.A	N.A	N.A	3											
	87833-5320	N.A	N.A	N.A	2	YES	N.A	YES	YES							3.18
	87833-5321	N.A	N.A	N.A	3											
	87833-1436	N.A	N.A	N.A	3	YES	N.A	YES	YES							3.50
	87833-7520	N.A	87833-7420	N.A	2	YES	N.A	YES	YES							1.70
16	87833-1619	N.A	N.A	N.A	1	YES	N.A	YES	YES	18.65	14.00	17.00	16.85	10.00	N.A	2.16
	87833-1620	N.A	N.A	N.A	2											
	87833-1621	N.A	87833-7821	N.A	3											
	87833-6120	N.A	87833-7120	N.A	2	YES	N.A	YES	YES							3.18
18	87833-1819	N.A	N.A	N.A	1	YES	N.A	YES	YES	20.65	16.00	19.00	18.85	12.00	N.A	2.16
	87833-1820	N.A	N.A	N.A	2											
	87833-1821	N.A	N.A	N.A	3											
	87833-6220	N.A	N.A	N.A	2	YES	N.A	YES	YES							3.18
20	87833-2019	N.A	N.A	N.A	1	YES	N.A	YES	YES	22.65	18.00	21.00	20.85	14.00	N.A	2.16
	87833-2020	N.A	87833-7220	N.A	2											
	87833-2021	N.A	N.A	N.A	3											
	87833-6520	N.A	N.A	N.A	2	YES	N.A	YES	YES							3.18
	87833-6521	N.A	N.A	(A14) 87833-2037	3											
	87833-2036	N.A	N.A	N.A	3	YES	N.A	YES	YES							3.50
22	87833-2219	N.A	N.A	N.A	1	YES	N.A	YES	YES	24.65	20.00	23.00	22.85	16.00	N.A	2.16
	87833-2220	N.A	N.A	N.A	2											
	87833-2221	N.A	N.A	N.A	3											
24	87833-2419	N.A	N.A	N.A	1	YES	N.A	YES	YES	26.65	22.00	25.00	24.85	18.00	N.A	2.16
	87833-2420	N.A	87833-7020	N.A	2											
	87833-2421	N.A	N.A	N.A	3											
	87833-7320	N.A	N.A	N.A	2	YES	N.A	YES	YES							2.00
	87833-2436	N.A	N.A	N.A	3	YES	N.A	YES	YES							3.50
	87833-6920	N.A	N.A	N.A	2	YES	N.A	YES	YES							3.27

PLATING OPTIONS:

1 - 0.05-0.13µm/2-5µin GOLD IN CONTACT AREA AND 1.88µm/75µin MIN. MATTE TIN IN SOLDER TAIL AREA OVER 1.27µm/50µin MIN. NICKEL OVERALL.

2 - 0.38µm/15µin MIN. GOLD IN CONTACT AREA AND 1.88µm/75µin MIN. MATTE TIN IN SOLDER TAIL AREA OVER 1.27µm/50µin MIN. NICKEL OVERALL.

3 - 0.76µm/30µin MIN. GOLD IN CONTACT AREA AND 1.88µm/75µin MIN. MATTE TIN IN SOLDER TAIL AREA OVER 1.27µm/50µin MIN. NICKEL OVERALL.

THIS DRAWING CONTAINS INFORMATION THAT IS PROPRIETARY TO MOLEX ELECTRONIC TECHNOLOGIES, LLC AND SHOULD NOT BE USED WITHOUT WRITTEN PERMISSION

FUNCTIONAL SYMBOLS: F/A = 0, F/C = 0, F/P = 0

DIVISIONAL SYMBOLS

DIMENSION UNITS	SCALE
mm	1:1
GENERAL TOLERANCES (UNLESS SPECIFIED)	
ANGULAR TOL	± 3°
4 PLACES	±
3 PLACES	±
2 PLACES	± 0.200
1 PLACE	±
0 PLACES	±

DRAFT WHERE APPLICABLE MUST REMAIN WITHIN DIMENSIONS

CURRENT REV DESC: Adding New Part Numbers

STATUS: Production

DRWN: Meghraj Boodagatti 2026-06-03

CHK'D: Meghraj Boodagatti 2026-06-10

APPR: Saravanakumar Murugesan 2026-06-10

THIRD ANGLE PROJECTION | DRAWING: A3-SIZE | SERIES: 87833

molex

MILLIGRID, 2MM PITCH
SHROUDED HEADER R/A, THROUGH HOLE

PRODUCT CUSTOMER DRAWING

DOCUMENT NUMBER	DOC TYPE	DOC PART	REVISION
SD-87833-0001	PSD	001	A15

MATERIAL NUMBER	CUSTOMER	SHEET NUMBER
SEE TABLE	GENERAL MARKET	7 OF 9

26 TO 38 CIRCUITS

CKT SIZE	ASSY. P/N WITHOUT KAPTON IN TUBE	ASSY. P/N WITH KAPTON IN TUBE	ASSY. P/N WITH KAPTON IN T&R	PLATING OPTIONS	FRICTION LOCKS		DUAL SIDE SLOTS	CENTER POLARIZATION	DIMENSION						
					DUAL	CENTER			A	B	C	D	E	F	G (SOLDER TAIL)
26	87833-2619	N.A	N.A	1	YES	N.A	YES	YES	28.65	24.00	27.00	26.85	20.00	N.A	2.16
	87833-2620	N.A	N.A	2											
	87833-2621	N.A	N.A	3											
	87833-2636	N.A	N.A	3	YES	N.A	YES	YES							3.50
28	87833-2819	N.A	N.A	1	YES	N.A	YES	YES	30.65	26.00	29.00	28.85	22.00	N.A	2.16
	87833-2820	N.A	N.A	2											
	87833-2821	N.A	N.A	3											
	87833-6620	N.A	N.A	2	YES	N.A	YES	YES							3.18
30	87833-3019	N.A	N.A	1	YES	N.A	YES	YES	32.65	28.00	31.00	30.85	24.00	N.A	2.16
	87833-3020	N.A	N.A	2											
	87833-3021	N.A	N.A	3											
	87833-6720	N.A	N.A	2	YES	N.A	YES	YES							3.18
	87833-6721	N.A	N.A	3											
	87833-3036	N.A	N.A	3	YES	N.A	YES	YES							3.50
32	87833-3219	N.A	N.A	1	YES	N.A	YES	YES	34.65	30.00	33.00	32.85	26.00	N.A	2.16
	87833-3220	N.A	N.A	2											
	87833-3221	N.A	N.A	3											
34	87833-3419	N.A	N.A	1	YES	N.A	YES	YES	36.65	32.00	35.00	34.85	28.00	N.A	2.16
	87833-3420	N.A	N.A	2											
	87833-3421	N.A	N.A	3											
	87833-5420	N.A	N.A	2	YES	N.A	YES	YES							3.18
	87833-3424	N.A	N.A	2	N.A	N.A	YES	YES							2.92
36	87833-3619	N.A	N.A	1	YES	N.A	YES	YES	38.65	34.00	37.00	36.85	30.00	N.A	2.16
	87833-3620	N.A	N.A	2											
	87833-3621	N.A	N.A	3											
38	87833-3819	N.A	N.A	1	YES	N.A	YES	YES	40.65	36.00	39.00	38.85	32.00	N.A	2.16
	87833-3820	N.A	N.A	2											
	87833-3821	N.A	N.A	3											

PLATING OPTIONS:

1 - 0.05-0.13µm/2-5µin GOLD IN CONTACT AREA AND 1.88µm/75µin MIN. MATTE TIN IN SOLDER TAIL AREA OVER 1.27µm/50µin MIN. NICKEL OVERALL.

2 - 0.38µm/15µin MIN. GOLD IN CONTACT AREA AND 1.88µm/75µin MIN. MATTE TIN IN SOLDER TAIL AREA OVER 1.27µm/50µin MIN. NICKEL OVERALL.

3 - 0.76µm/30µin MIN. GOLD IN CONTACT AREA AND 1.88µm/75µin MIN. MATTE TIN IN SOLDER TAIL AREA OVER 1.27µm/50µin MIN. NICKEL OVERALL.

THIS DRAWING CONTAINS INFORMATION THAT IS PROPRIETARY TO MOLEX ELECTRONIC TECHNOLOGIES, LLC AND SHOULD NOT BE USED WITHOUT WRITTEN PERMISSION

FUNCTIONAL SYMBOLS: FA = 0, FC = 0, FP = 0

DIVISIONAL SYMBOLS

DIMENSION UNITS	SCALE
mm	1:1

GENERAL TOLERANCES (UNLESS SPECIFIED)

ANGULAR TOL	± 3°
4 PLACES	±
3 PLACES	±
2 PLACES	± 0.200
1 PLACE	±
0 PLACES	±

DRAFT WHERE APPLICABLE MUST REMAIN WITHIN DIMENSIONS

CURRENT REV DESC: Adding New Part Numbers

STATUS: Production

DRWN: Meghraj Boodagatti 2026-06-03

CHK'D: Meghraj Boodagatti 2026-06-10

APPR: Saravanakumar Murugesan 2026-06-10

THIRD ANGLE PROJECTION | DRAWING: A3-SIZE | SERIES: 87833

molex

MILLIGRID, 2MM PITCH
SHROUDED HEADER R/A, THROUGH HOLE

PRODUCT CUSTOMER DRAWING

DOCUMENT NUMBER	DOC TYPE	DOC PART	REVISION
SD-87833-0001	PSD	001	A15

MATERIAL NUMBER	CUSTOMER	SHEET NUMBER
SEE TABLE	GENERAL MARKET	8 OF 9

40 TO 50 CIRCUITS

CKT SIZE	ASSY. P/N WITHOUT KAPTON IN TUBE	ASSY. P/N WITH KAPTON IN TUBE	ASSY. P/N WITH KAPTON IN T&R	ASSY. P/N WITHOUT KAPTON IN T&R	PLATING OPTIONS	FRICTION LOCKS		DUAL SIDE SLOTS	CENTER POLARIZATION	DIMENSION						
						DUAL	CENTER			A	B	C	D	E	F	G (SOLDER TAIL)
40	87833-4019	N.A	N.A	N.A	1	YES	N.A	YES	YES	42.65	38.00	41.00	40.85	34.00	N.A	2.16
	87833-4020	N.A	N.A	N.A	2											
	87833-4021	N.A	N.A	N.A	3											
42	87833-4219	N.A	N.A	N.A	1	YES	N.A	YES	YES	44.65	40.00	43.00	42.85	36.00	N.A	2.16
	87833-4220	N.A	N.A	N.A	2											
	87833-4221	N.A	N.A	N.A	3											
	87833-4222	N.A	87833-4322	87833-4223	3	YES	N.A	YES	YES							3.50
44	87833-4419	N.A	N.A	N.A	1	44.65	40.00	43.00	42.85	2.16	42.00	45.00	44.85	38.00	N.A	2.16
	87833-4420	N.A	N.A	N.A	2											
	87833-4421	N.A	N.A	N.A	3											
	87833-4424	N.A	N.A	N.A	2	N.A	N.A	YES	YES							
	87833-4425	N.A	N.A	N.A	3											2.92
46	87833-4619	N.A	N.A	N.A	1	YES	N.A	YES	YES	48.65	44.00	47.00	46.85	40.00	N.A	2.16
	87833-4620	N.A	N.A	N.A	2											
	87833-4621	N.A	N.A	N.A	3											
48	87833-4819	N.A	N.A	N.A	1	YES	N.A	YES	YES	50.65	46.00	49.00	48.85	42.00	N.A	2.16
	87833-4820	N.A	N.A	N.A	2											
	87833-4821	N.A	N.A	N.A	3											
50	87833-5019	N.A	N.A	N.A	1	YES	N.A	YES	YES	52.65	48.00	51.00	50.85	44.00	N.A	2.16
	87833-5020	N.A	N.A	N.A	2											
	87833-5021	N.A	N.A	N.A	3											

PLATING OPTIONS:

1 - 0.05-0.13µm/2-5µin GOLD IN CONTACT AREA AND 1.88µm/75µin MIN. MATTE TIN IN SOLDER TAIL AREA OVER 1.27µm/50µin MIN. NICKEL OVERALL.

2 - 0.38µm/15µin MIN. GOLD IN CONTACT AREA AND 1.88µm/75µin MIN. MATTE TIN IN SOLDER TAIL AREA OVER 1.27µm/50µin MIN. NICKEL OVERALL.

3 - 0.76µm/30µin MIN. GOLD IN CONTACT AREA AND 1.88µm/75µin MIN. MATTE TIN IN SOLDER TAIL AREA OVER 1.27µm/50µin MIN. NICKEL OVERALL.

THIS DRAWING CONTAINS INFORMATION THAT IS PROPRIETARY TO MOLEX ELECTRONIC TECHNOLOGIES, LLC AND SHOULD NOT BE USED WITHOUT WRITTEN PERMISSION

FUNCTIONAL SYMBOLS: FA = 0, FC = 0, FP = 0

DIVISIONAL SYMBOLS

DIMENSION UNITS: mm

SCALE: 1:1

GENERAL TOLERANCES (UNLESS SPECIFIED)

ANGULAR TOL	± 3°
4 PLACES	±
3 PLACES	±
2 PLACES	± 0.200
1 PLACE	±
0 PLACES	±

DRAFT WHERE APPLICABLE MUST REMAIN WITHIN DIMENSIONS

CURRENT REV DESC: Adding New Part Numbers

STATUS: Production

DRWN:	Meghraj Boodagatti	2026-06-03
CHK'D:	Meghraj Boodagatti	2026-06-10
APPR:	Saravanakumar Murugesan	2026-06-10

THIRD ANGLE PROJECTION

DRAWING: A3-SIZE

SERIES: 87833

molex

MILLIGRID, 2MM PITCH
SHROUDED HEADER R/A, THROUGH HOLE

PRODUCT CUSTOMER DRAWING

DOCUMENT NUMBER	DOC TYPE	DOC PART	REVISION
SD-87833-0001	PSD	001	A15

MATERIAL NUMBER	CUSTOMER	SHEET NUMBER
SEE TABLE	GENERAL MARKET	9 OF 9