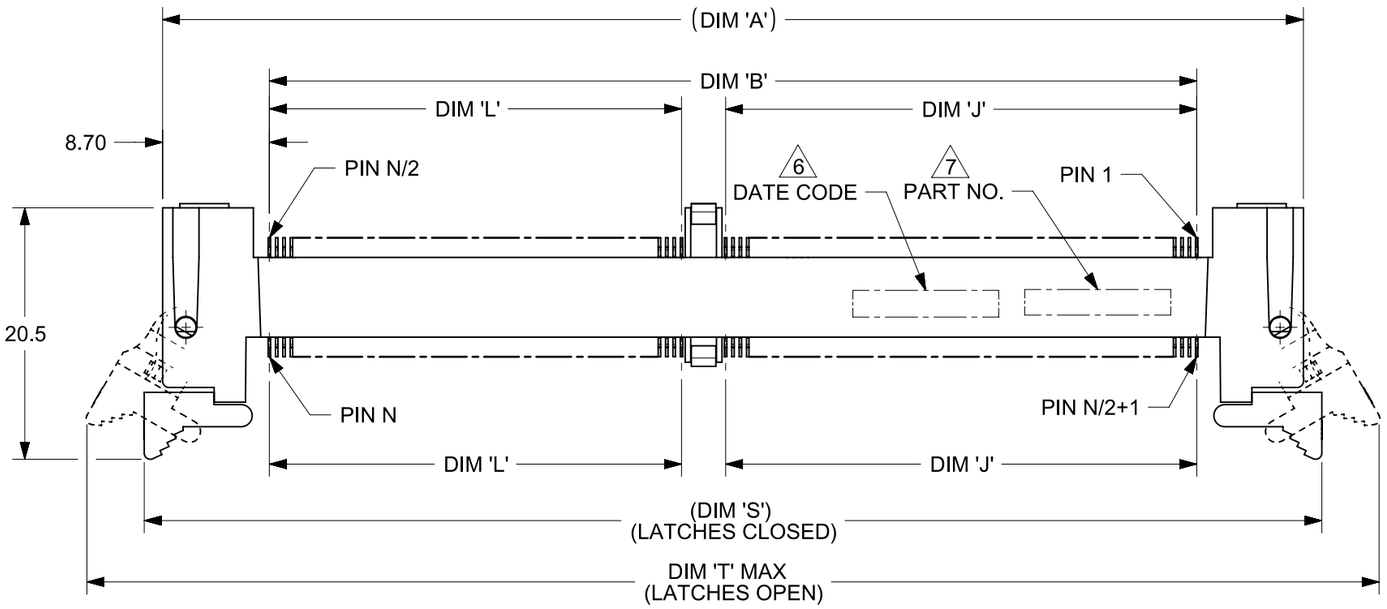

NOTES :

1) MATERIAL :
   HOUSING : HIGH TEMPERATURE LIQUID CRYSTAL POLYMER, UL94V-0
   COLOUR : BLACK
   CONTACTS : COPPER ALLOY
   LATCHES : HIGH TEMPERATURE NYLON, UL94V-0
   COLOUR : NATURAL (OFF-WHITE)
2) FINISH :
   CONTACT AREA : 0.76 MICROMETER (30 MICROINCH) MIN GOLD OVER
   1.25 MICROMETER (50 MICROINCH) MIN NICKEL
   SOLDER LEADS : 2.54 MICROMETER (100 MICROINCH) MIN TIN OVER
   1.25 MICROMETER (50 MICROINCH) MIN NICKEL
3) ACCEPTS 1.0 mm THICK MEMORY MODULE PER JEDEC MO-244
   FOR 244 CKTS AND MO-258 FOR 200 CKTS.
4) PRODUCT SPECIFICATION : PS-87918-001
5) PACKAGING SPECIFICATION: PRODUCT SHALL BE PACKED IN TRAY.
   SEE TABLE ON SHEET 4.

△6 DATE CODE SHALL BE MARKED LEGIBLY AS SHOWN :YYDDD

△7 PART NUMBER SHALL BE MARKED LEGIBLY AS SHOWN.
87918-XXXX(REFER TO TABLE)

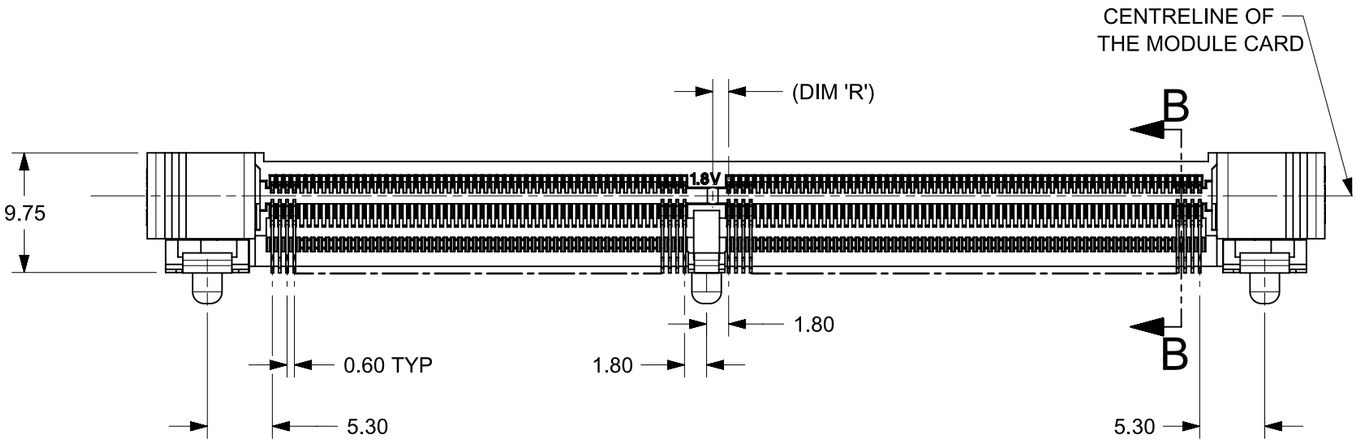

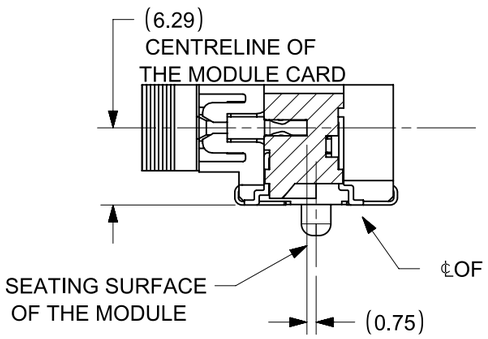

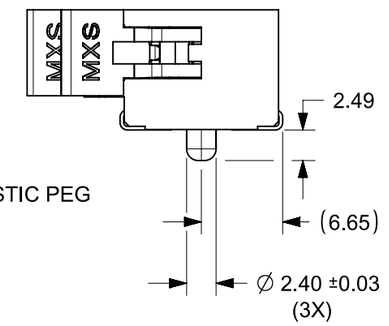

THIS DRAWING CONTAINS INFORMATION THAT IS PROPRIETARY TO MOLEX ELECTRONIC TECHNOLOGIES, LLC AND SHOULD NOT BE USED WITHOUT WRITTEN PERMISSION

DIMENSION UNITS	SCALE
mm	NTS

GENERAL TOLERANCES (UNLESS SPECIFIED)	
ANGULAR TOL	± 1°
4 PLACES	±
3 PLACES	±
2 PLACES	± 0.130
1 PLACE	± 0.25
0 PLACES	±

DRAFT WHERE APPLICABLE MUST REMAIN WITHIN DIMENSIONS

CURRENT REV DESC: REMOVED OBSOLETED PART NUMBERS AS PER PCN#515988

STATUS: Production
DRWN: Sampreet S Mirajkar 2025-11-17
CHK'D: Ganesh Rao B 2025-12-01
APPR: Gurunandan GA 2025-12-01

THIRD ANGLE PROJECTION | DRAWING: A3-SIZE | SERIES: 87918

molex

MINI DIMM, 0.60MM PITCH
244/200 CKTS

PRODUCT CUSTOMER DRAWING

DOCUMENT NUMBER	DOC TYPE	DOC PART	REVISION
SD-87918-001	PSD	001	B7

MATERIAL NUMBER	CUSTOMER	SHEET NUMBER
SEE TABLE	GENERAL MARKET	1 OF 4

FORMAT: TC-tb-prod-A3
REVISION: B
DATE: 2022/08/01

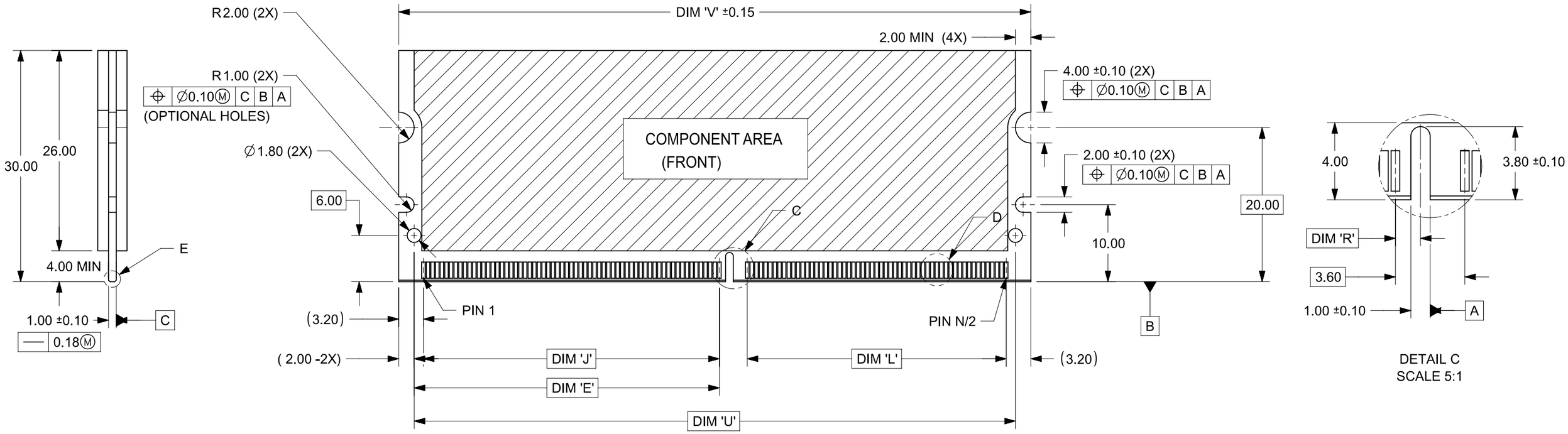

THIS DRAWING CONTAINS INFORMATION THAT IS PROPRIETARY TO MOLEX ELECTRONIC TECHNOLOGIES, LLC AND SHOULD NOT BE USED WITHOUT WRITTEN PERMISSION

DIMENSION UNITS	SCALE
mm	NTS

GENERAL TOLERANCES (UNLESS SPECIFIED)

ANGULAR TOL	± 1°
4 PLACES	±
3 PLACES	±
2 PLACES	± 0.130
1 PLACE	± 0.25
0 PLACES	±

DRAFT WHERE APPLICABLE MUST REMAIN WITHIN DIMENSIONS

CURRENT REV DESC: REMOVED OBSOLETED PART NUMBERS AS PER PCN#515988

STATUS: Production

DRWN:	Sampreet S Mirajkar	2025-11-17
CHK'D:	Ganesh Rao B	2025-12-01
APPR:	Gurunandan GA	2025-12-01

THIRD ANGLE PROJECTION | DRAWING: A3-SIZE | SERIES: 87918

molex

MINI DIMM, 0.60MM PITCH
244/200 CKTS

PRODUCT CUSTOMER DRAWING

DOCUMENT NUMBER	DOC TYPE	DOC PART	REVISION
SD-87918-001	PSD	001	B7

MATERIAL NUMBER	CUSTOMER	SHEET NUMBER
SEE TABLE	GENERAL MARKET	2 OF 4

FORMAT: TC-tb-prod-A3
REVISION: B
DATE: 2022/08/01

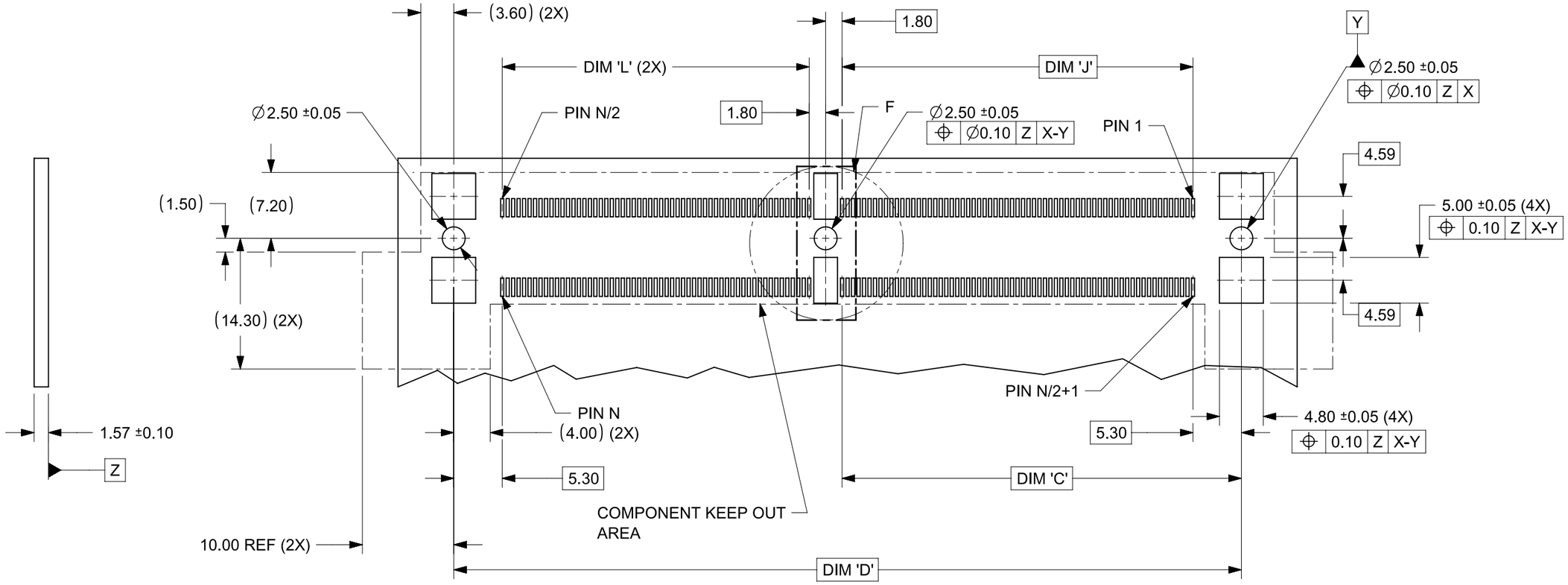

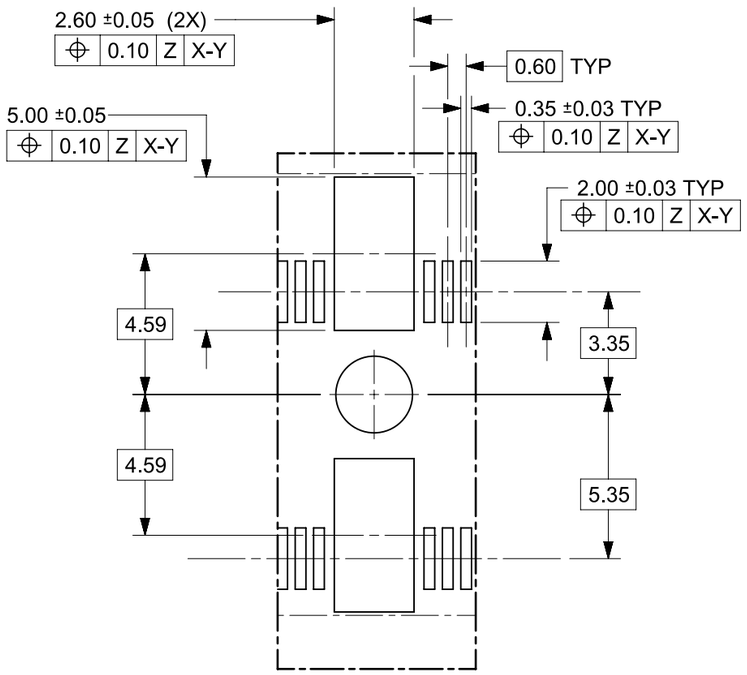

DETAIL F
SCALE 5:1

RECOMMENDED PCB LAYOUT

THIS DRAWING CONTAINS INFORMATION THAT IS PROPRIETARY TO MOLEX ELECTRONIC TECHNOLOGIES, LLC AND SHOULD NOT BE USED WITHOUT WRITTEN PERMISSION

DIMENSION UNITS	SCALE
mm	NTS

GENERAL TOLERANCES (UNLESS SPECIFIED)

ANGULAR TOL	± 1°
4 PLACES	±
3 PLACES	±
2 PLACES	± 0.130
1 PLACE	± 0.25
0 PLACES	±

DRAFT WHERE APPLICABLE MUST REMAIN WITHIN DIMENSIONS

CURRENT REV DESC: REMOVED OBSOLETED PART NUMBERS AS PER PCN#515988

STATUS: Production
DRWN: Sampreet S Mirajkar 2025-11-17
CHK'D: Ganesh Rao B 2025-12-01
APPR: Gurunandan GA 2025-12-01

molex

MINI DIMM, 0.60MM PITCH
244/200 CKTS

PRODUCT CUSTOMER DRAWING

DOCUMENT NUMBER	DOC TYPE	DOC PART	REVISION
SD-87918-001	PSD	001	B7

THIRD ANGLE PROJECTION	DRAWING	SERIES	MATERIAL NUMBER	CUSTOMER	SHEET NUMBER
	A3-SIZE	87918	SEE TABLE	GENERAL MARKET	3 OF 4

FORMAT: TC-tb-prod-A3
REVISION: B
DATE: 2022/08/01

PART NUMBER	CKT SIZE 'N'	MODULE CARD	VOLTAGE KEY	DIM 'R'	DIM 'E'	DIM 'J'	DIM 'L'	DIM 'A'	DIM 'S'	DIM 'T'	DIM 'U'	DIM 'V'	DIM 'C'	DIM 'D'	DIM 'B'	PACKAGING SPECIFICATION
87918-0001	244	DDR2	1.8V	1.30	39.60	38.40	33.60	93.0	96.0	106.2	78.00	82.00	45.50	86.20	75.60	PK-87918-002

THIS DRAWING CONTAINS INFORMATION THAT IS PROPRIETARY TO MOLEX ELECTRONIC TECHNOLOGIES, LLC AND SHOULD NOT BE USED WITHOUT WRITTEN PERMISSION

DIMENSION UNITS	SCALE
mm	NTS

GENERAL TOLERANCES (UNLESS SPECIFIED)	
ANGULAR TOL	± 1°
4 PLACES	±
3 PLACES	±
2 PLACES	± 0.130
1 PLACE	± 0.25
0 PLACES	±

DRAFT WHERE APPLICABLE MUST REMAIN WITHIN DIMENSIONS

CURRENT REV DESC: REMOVED OBSOLETED PART NUMBERS AS PER PCN#515988

STATUS: Production

DRWN:	Sampreet S Mirajkar	2025-11-17
CHK'D:	Ganesh Rao B	2025-12-01
APPR:	Gurunandan GA	2025-12-01

molex

MINI DIMM, 0.60MM PITCH
244/200 CKTS

PRODUCT CUSTOMER DRAWING

DOCUMENT NUMBER	DOC TYPE	DOC PART	REVISION
SD-87918-001	PSD	001	B7

THIRD ANGLE PROJECTION	DRAWING	SERIES	MATERIAL NUMBER	CUSTOMER	SHEET NUMBER
	A3-SIZE	87918	SEE TABLE	GENERAL MARKET	4 OF 4

FORMAT: TC-tb-prod-A3
REVISION: B
DATE: 2022/08/01