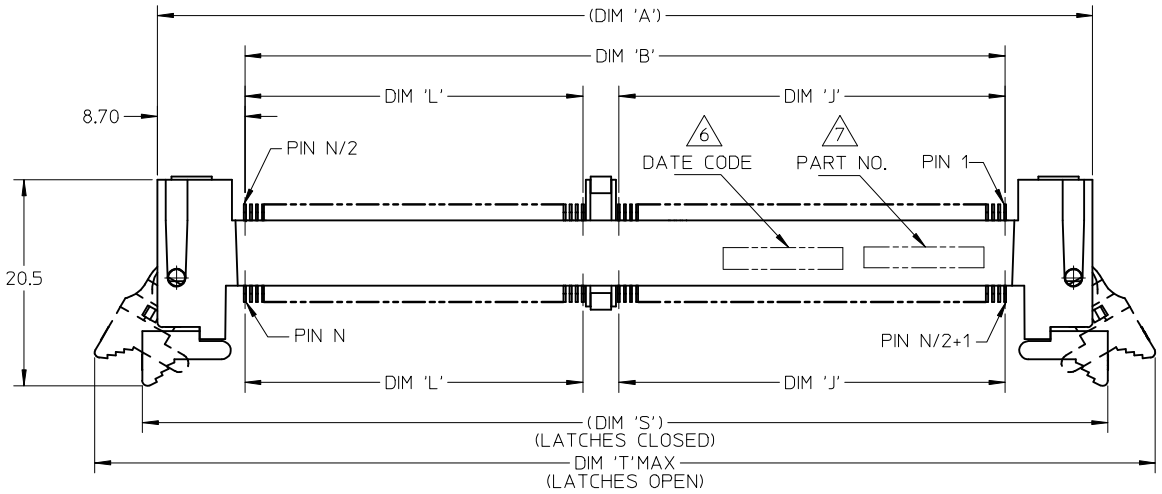

NOTES :

1) MATERIAL :
   HOUSING : HIGH TEMPERATURE LIQUID CRYSTAL POLYMER, UL94V-0
   COLOUR : BLACK
   CONTACTS : COPPER ALLOY
   LATCHES : HIGH TEMPERATURE NYLON, UL94V-0
   COLOUR : NATURAL (OFF-WHITE)
2) FINISH :
   CONTACT AREA : 0.76 MICROMETER (30 MICROINCH) MIN GOLD OVER
   1.25 MICROMETER (50 MICROINCH) MIN NICKEL
   SOLDER LEADS : 2.54 MICROMETER (100 MICROINCH) MIN TIN OVER
   1.25 MICROMETER (50 MICROINCH) MIN NICKEL
3) ACCEPTS 1.0 mm THICK MEMORY MODULE PER JEDEC MO-244
   FOR 244 CKTS AND MO-258 FOR 200 CKTS.
4) PRODUCT SPECIFICATION : PS-87918-001
5) PACKAGING SPECIFICATION: PRODUCT SHALL BE PACKED IN TRAY.
   SEE TABLE ON SHEET 4.

6) DATE CODE SHALL BE MARKED LEGIBLY AS SHOWN :YYDDD

7) PART NUMBER SHALL BE MARKED LEGIBLY AS SHOWN.
   87918-XXXX(REFER TO TABLE)

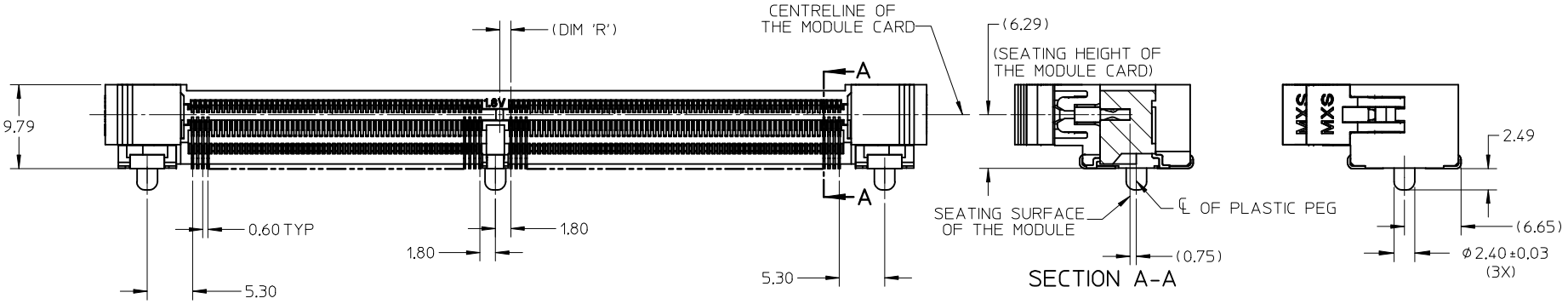

ADD PART NUMBER EC NO: S2014-0858 DRWN:JAKEEMEW 2013/12/26 CH'KD:CCTEH 2014/03/19 APPR:SHLENI 2014/03/20 B4	REV / DESCRIPTION	QUALITY SYMBOLS F_A=0 F_C=0 F_P=0	GENERAL TOLERANCES (UNLESS SPECIFIED) mm / INCH 4 PLACES ± --- / ± --- 3 PLACES ± --- / ± --- 2 PLACES ± 0.13 / ± --- 1 PLACE ± 0.25 / ± --- 0 PLACE ± / ± ANGULAR ± 1 ° DRAFT WHERE APPLICABLE MUST REMAIN WITHIN DIMENSIONS	DIMENSION STYLE MM ONLY DRAWN BY EDMUND DATE 2004/08/17 CHECKED BY SRRAMESH DATE 2005/01/25 APPROVED BY GGLEE DATE 2005/01/25 MATERIAL NO. SEE TABLE	SCALE NTS DESIGN UNITS METRIC THIRD ANGLE PROJECTION TITLE MINI DIMM, 0.60MM PITCH 244/200 CKTS STANDARD R/A molex DOCUMENT NO. SD-87918-001	SHEET NO. 1 OF 4

SIZE A3

THIS DRAWING CONTAINS INFORMATION THAT IS PROPRIETARY TO MOLEX INCORPORATED AND SHOULD NOT BE USED WITHOUT WRITTEN PERMISSION

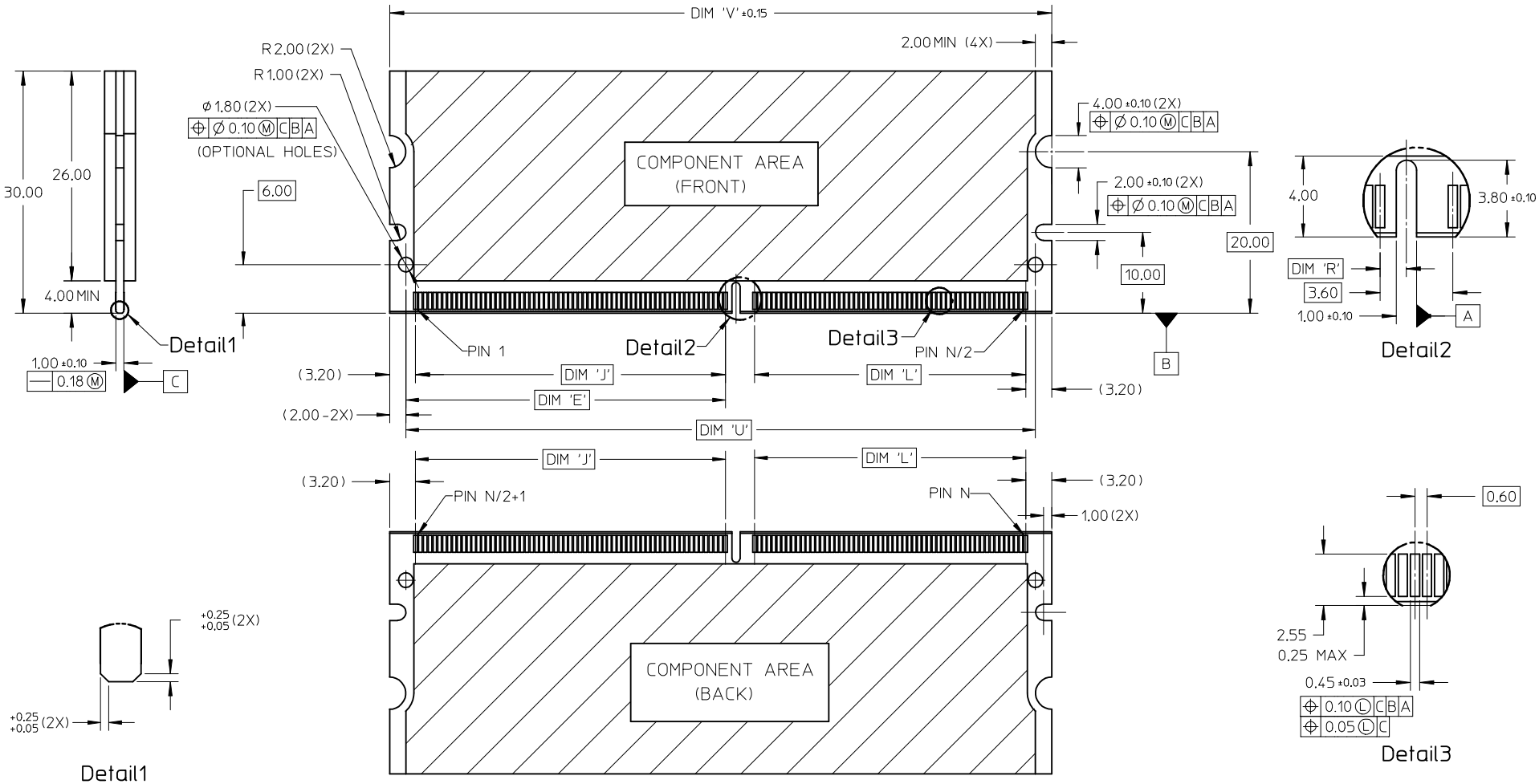

ADD PART NUMBER EC NO: S2014-0858 2013/12/26 DRWN: JAKEEMEW 2014/03/19 CH'KD: CCTEH 2014/03/20 APPR: SHLENI	DESCRIPTION	QUALITY SYMBOLS FA=0 FC=0 FB=0	GENERAL TOLERANCES (UNLESS SPECIFIED) mm / INCH 4 PLACES ± --- / ± --- 3 PLACES ± --- / ± --- 2 PLACES ± 0.13 / ± --- 1 PLACE ± 0.25 / ± --- 0 PLACE ± / ± ANGULAR ± 1 ° DRAFT WHERE APPLICABLE MUST REMAIN WITHIN DIMENSIONS	DIMENSION STYLE: MM ONLY	SCALE: NTS	DESIGN UNITS: METRIC	THIRD ANGLE PROJECTION
				DRAWN BY: EDMUND DATE: 2004/08/17 CHECKED BY: SRRAMESH DATE: 2005/01/25 APPROVED BY: GGLEE DATE: 2005/01/25 MATERIAL NO.: SEE TABLE	TITLE: MINI DIMM, 0.60MM PITCH 244/200 CKTS STANDARD R/A molex DOCUMENT NO.: SD-87918-001 SHEET NO.: 2 OF 4		
B4	REV			SIZE: A3	THIS DRAWING CONTAINS INFORMATION THAT IS PROPRIETARY TO MOLEX INCORPORATED AND SHOULD NOT BE USED WITHOUT WRITTEN PERMISSION		

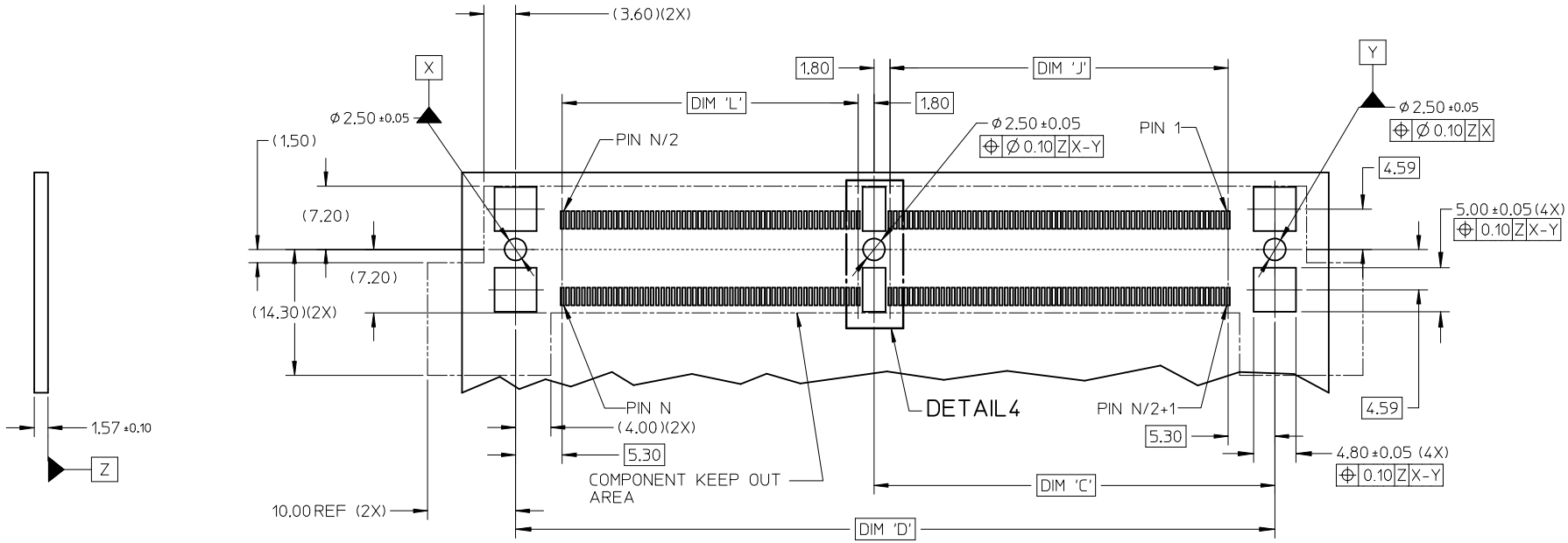

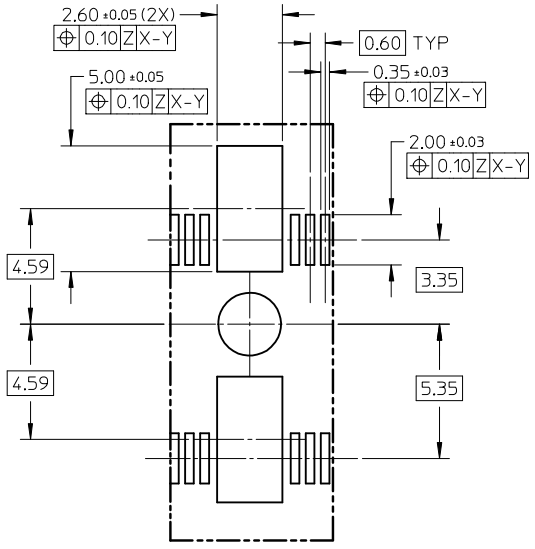

DETAIL4

RECOMMENDED PCB LAYOUT

ADD PART NUMBER
EC NO: S2014-0858 2013/12/26
DRWN: JAKEEMEW 2014/03/19
CH'KD: CCTEH 2014/03/20
APPR: SHLENI 2014/03/20
DESCRIPTION
REV
B4

QUALITY SYMBOLS
F_A=0
F_C=0
F_P=0

GENERAL TOLERANCES (UNLESS SPECIFIED)

	mm	INCH
4 PLACES	± ---	± ---
3 PLACES	± ---	± ---
2 PLACES	± 0.13	± ---
1 PLACE	± 0.25	± ---
0 PLACE	±	±

ANGULAR ± 1 °
DRAFT WHERE APPLICABLE MUST REMAIN WITHIN DIMENSIONS

DIMENSION STYLE: MM ONLY
SCALE: NTS
DESIGN UNITS: METRIC
THIRD ANGLE PROJECTION

DRAWN BY: EDMUND DATE: 2004/08/17
CHECKED BY: SRRAMESH DATE: 2005/01/25
APPROVED BY: GGLEE DATE: 2005/01/25

TITLE: MINI DIMM, 0.60MM PITCH 244/200 CKTS STANDARD R/A

molex

MATERIAL NO.: SEE TABLE
DOCUMENT NO.: SD-87918-001
SHEET NO.: 3 OF 4

SIZE A3

THIS DRAWING CONTAINS INFORMATION THAT IS PROPRIETARY TO MOLEX INCORPORATED AND SHOULD NOT BE USED WITHOUT WRITTEN PERMISSION

PART NUMBER	CKT SIZE 'N'	MODULE CARD	VOLTAGE KEY	DIM 'R'	DIM 'E'	DIM 'J'	DIM 'L'	DIM 'A'	DIM 'S'	DIM 'T'	DIM 'U'	DIM 'V'	DIM 'C'	DIM 'D'	DIM 'B'	PACKAGING SPECIFICATION
87918-0001	244	DDR2	1.8 V	1.30	39.60	38.40	33.60	93.0	96.0	106.2	78.00	82.00	45.50	86.20	75.60	PK-87918-002
87918-0301		DDR3	1.5 V	2.30												
87918-0201	200	DDR2	1.8 V	1.30	24.60	23.40	35.40	79.8	82.8	93.0	64.80	68.80	30.50	73.00	62.40	PK-87918-001
87918-0202		DDR	2.5 V	2.30												
87918-0009	244	DDR2	1.8 V	1.30	39.60	38.40	33.60	93.0	96.0	106.2	78.00	82.00	45.50	86.20	75.60	PK-87918-005
87918-0302		DDR3	1.5 V	2.30												

ADD PART NUMBER
EC NO: S2014-0858 2013/12/26
DRWN: JAKEEMEW 2014/03/19
CH'KD: CCTEH 2014/03/20
APPR: SHLEN1
DESCRIPTION
REV
B4

QUALITY SYMBOLS
F_A=0
F_C=0
F_P=0

GENERAL TOLERANCES (UNLESS SPECIFIED)

	mm	INCH
4 PLACES	± ---	± ---
3 PLACES	± ---	± ---
2 PLACES	± 0.13	± ---
1 PLACE	± 0.25	± ---
0 PLACE	±	±

ANGULAR ± 1 °
DRAFT WHERE APPLICABLE MUST REMAIN WITHIN DIMENSIONS

DIMENSION STYLE: MM ONLY
SCALE: NTS
DESIGN UNITS: METRIC
THIRD ANGLE PROJECTION

DRAWN BY: EDMUND DATE: 2004/08/17
CHECKED BY: SRRAMESH DATE: 2005/01/25
APPROVED BY: GGLEE DATE: 2005/01/25

TITLE: MINI DIMM, 0.60MM PITCH 244/200 CKTS STANDARD R/A

molex

MATERIAL NO.: SEE TABLE
DOCUMENT NO.: SD-87918-001
SHEET NO.: 4 OF 4
SIZE: A3

THIS DRAWING CONTAINS INFORMATION THAT IS PROPRIETARY TO MOLEX INCORPORATED AND SHOULD NOT BE USED WITHOUT WRITTEN PERMISSION