This document was generated on 04/20/2015

PLEASE CHECK WWW.MOLEX.COM FOR LATEST PART INFORMATION

Part Number: 88753-8102
Status: Active
Overview: Consumer USB Products
Description: USB On-The-Go (OTG) Shielded I/O Cable Assembly, Mini A-to-Mini B, USB 2.0, 0.80m Length, Black

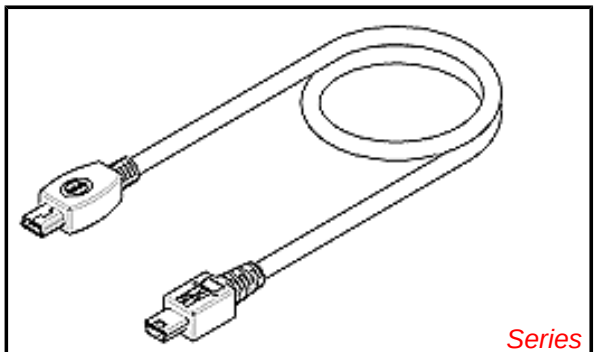

Series image - Reference only

Documents:
Drawing (PDF)
RoHS Certificate of Compliance (PDF)

General

Product Family	Cable Assemblies
Series	88740
Assembly Configuration	Dual Ended Connectors
Connector to Connector	USB Mini-A-to-Mini-B
Overview	Consumer USB Products
Product Name	USB
UPC	756054342640

Physical

Cable Length	0.80m
Circuits (Loaded)	5
Color - Resin	Black
Gender	Male-Male
Lock to Mating Part	Yes
Material - Plating Mating	Gold
Material - Plating Termination	Tin
Material - Resin	Polyester
Net Weight	31.340/g
Packaging Type	Bag
Pitch - Mating Interface	0.80mm
Plating min - Mating	0.762µm
Plating min - Termination	4.064µm
Single Ended	No
Termination Interface: Style	Through Hole
Wire Insulation Diameter	N/A
Wire Size AWG	28
Wire/Cable Type	Round

Electrical

Current - Maximum per Contact	1.0A
Shielded	Yes
Voltage - Maximum	30V

Material Info

Reference - Drawing Numbers

Sales Drawing	SD-887538200

EU RoHS
ELV and RoHS Compliant
REACH SVHC
Not Reviewed
Low-Halogen Status
Not Reviewed

China RoHS

Need more information on product environmental compliance?

Email productcompliance@molex.com
For a multiple part number RoHS Certificate of Compliance, click here

Please visit the Contact Us section for any non-product compliance questions.

Search Parts in this Series
88740Series

Mates With
USB On-The-Go (OTG) Mini-B Receptacle
54819 , 51387 , 48242 , 500075. 56579 USB On-The-Go (OTG) Mini-AB Receptacle

This document was generated on 04/20/2015

PLEASE CHECK WWW.MOLEX.COM FOR LATEST PART INFORMATION