XBee/XBee-PRO S2C 802.15.4

Radio Frequency (RF) Module

User Guide

Revision history—90001500

Revision	Date	Description
K	May 2019	Added FCC publication 996369 related information.
L	July 2019	Added the **NP** command. Added RS-485 support.
M	July 2021	Added safety instructions and UKCA labeling requirements.
N	September 2021	Updated Mexican certifications.
P	March 2022	Added translated safety instructions.

Trademarks and copyright

Digi, Digi International, and the Digi logo are trademarks or registered trademarks in the United States and other countries worldwide. All other trademarks mentioned in this document are the property of their respective owners.

© 2022 Digi International Inc. All rights reserved.

Disclaimers

Information in this document is subject to change without notice and does not represent a commitment on the part of Digi International. Digi provides this document “as is,” without warranty of any kind, expressed or implied, including, but not limited to, the implied warranties of fitness or merchantability for a particular purpose. Digi may make improvements and/or changes in this manual or in the product(s) and/or the program(s) described in this manual at any time.

Warranty

To view product warranty information, go to the following website:

www.digi.com/howtobuy/terms

Customer support

Gather support information: Before contacting Digi technical support for help, gather the following information:

- Product name and model
- Product serial number (s)
- Firmware version
- Operating system/browser (if applicable)
- Logs (from time of reported issue)
- Trace (if possible)
- Description of issue
- Steps to reproduce

Contact Digi technical support: Digi offers multiple technical support plans and service packages. Contact us at +1 952.912.3444 or visit us at www.digi.com/support.

Feedback

To provide feedback on this document, email your comments to

techcomm@digi.com

Include the document title and part number (XBee/XBee-PRO S2C 802.15.4 RF Module User Guide, 90001500 P) in the subject line of your email.

Contents

XBee/XBee-PRO S2C 802.15.4 RF Module User Guide

Applicable firmware and hardware 12

Safety instructions

Safety instructions 14
XBee modules 14
Инструкции за безопасност 14
XBee модули 14
Sigurnosne upute 15
XBee moduli 15
Bezpečnostní instrukce 15
moduly XBee 15
Sikkerhedsinstruktioner 16
XBee moduler 16
Veiligheidsinstructies 16
XBee-modules 16
Ohutusjuhised 17
XBee moodulid 17
Turvallisuusohjeet 17
XBee moduulit 17
Consignes de sécurité 18
Modules XBee 18
Sicherheitshinweise 19
XBee-Module 19
Οδηγίες ασφαλείας 19
Biztonsági utasítások 20
XBee modulok 20
Istruzioni di sicurezza 20
Drošības instrukcijas 21
Saugos instrukcijos 21
XBee moduliai 21
Sikkerhetsinstruksjoner 22
XBee-moduler 22
Instrukcje bezpieczeństwa 22
Moduły XBee 22
Instruções de segurança 23
Módulos XBee 23
Instructiuni de siguranta 24
module XBee 24

Bezpečnostné inštrukcie 24
moduly XBee 24
Varnostna navodila 25
XBee moduli 25
Módulos XBee 25
Säkerhets instruktioner 26
XBee-moduler 26

Technical specifications

Performance specifications 28
Power requirements 28
General specifications 29
Regulatory conformity summary 29
Serial communication specifications 30
UART pin assignments 30
SPI pin assignments 30
GPIO specifications 31

Hardware

Antenna options 33
Mechanical drawings 33
Mounting considerations 34
Pin signals 35
Notes 38
Design notes 38
Power supply design 38
Board layout 38
Antenna performance 39
Keepout area 39
RF pad version 41

Configure the XBee/XBee-PRO S2C 802.15.4 RF Module

Software libraries 45
Configure the device using XCTU 45
Over-the-air (OTA) firmware update 45
XBee Network Assistant 45
XBee Multi Programmer 46

Modes

Serial modes 48
Transparent operating mode 48
API operating mode 48
Command mode 49
Transceiver modes 51
Idle mode 51
Transmit mode 51
Receive mode 51

Operation

Addressing ... 53
- Send packets to a specific device ... 53
- Addressing modes ... 53

Encryption ... 53
Maximum payload ... 55
- Maximum payload rules ... 55
- Maximum payload summary tables ... 56
- Work with Legacy devices ... 56

Networking ... 57
- MAC Mode configuration ... 57
- XBee retries configuration ... 58
- Transmit status based on MAC mode and XBee retries configurations ... 58
- Peer-to-peer networks ... 59
- Master/slave networks ... 59

Clear Channel Assessment (CCA) ... 63
- CCA operations ... 63

Serial interface ... 64
- Select a serial port ... 64
- UART data flow ... 65
- Flow control ... 65

SPI operation ... 67
- SPI signals ... 67
- SPI parameters ... 68
- SPI and API mode ... 68
- Full duplex operation ... 68
- Slave mode characteristics ... 68

I/O support ... 69
- Digital I/O line support ... 70
- Analog input ... 70
- On demand I/O sampling ... 70
- Periodic I/O sampling ... 72
- Change Detect I/O sampling ... 73
- Wakeup I/O sampling ... 74
- Sample rate (interval) ... 74
- I/O line passing ... 74
- Output control ... 75

Sleep support ... 75
- Sleep modes ... 75
- Sleep parameters ... 76
- Sleep current ... 77
- Sleep pins ... 77
- Direct and indirect transmission ... 77

Node discovery ... 78
- Node discovery ... 78
- Node discovery in compatibility mode ... 79
- Directed node discovery ... 79
- Directed node discovery in compatibility mode ... 79
- Destination Node ... 79

Remote configuration commands ... 80
- Send a remote command ... 80
- Apply changes on remote devices ... 80
- Remote command responses ... 80

AT commands

Special commands 82
WR (Write) 82
RE (Restore Defaults) 82
FR (Software Reset) 82
Networking and security commands 82
C8 (802.15.4 Compatibility) 83
CH (Operating Channel) 84
ID (Network ID) 84
DH (Destination Address High) 85
DL (Destination Address Low) 85
MY (Source Address) 85
SH (Serial Number High) 85
SL (Serial Number Low) 86
MM (MAC Mode) 86
RR (XBee Retries) 87
RN (Random Delay Slots) 87
ND (Network Discovery) 88
NT (Node Discover Timeout) 89
NO (Node Discovery Options) 89
DN (Discover Node) 89
CE (Coordinator Enable) 90
SC (Scan Channels) 90
SD (Scan Duration) 91
A1 (End Device Association) 92
A2 (Coordinator Association) 93
AI (Association Indication) 93
DA (Force Disassociation) 94
FP (Force Poll) 94
AS (Active Scan) 95
ED (Energy Detect) 96
EE (Encryption Enable) 96
KY (AES Encryption Key) 96
NI (Node Identifier) 97
NP (Maximum Packet Payload Bytes) 97
RF interfacing commands 98
PL (TX Power Level) 98
PM (Power Mode) 99
CA (CCA Threshold) 99
Sleep commands 100
SM (Sleep Mode) 100
ST (Time before Sleep) 100
SP (Cyclic Sleep Period) 100
DP (Disassociated Cyclic Sleep Period) 101
SO (Sleep Options) 101
Serial interfacing commands 102
BD (Interface Data Rate) 102
NB (Parity) 103
RO (Packetization Timeout) 103
D7 (DIO7/CTS) 104
D6 (DIO6/RTS) 104
AP (API Enable) 105
I/O settings commands 105
D0 (DIO0/AD0) 105

D1 (DIO1/AD1) ... 106
D2 (DIO2/AD2) ... 106
D3 (DIO3/AD3) ... 107
D4 (DIO4) ... 107
D5 (DIO5/ASSOCIATED_INDICATOR) ... 108
D8 (DIO8/SLEEP_REQUEST) ... 108
P0 (RSSI/PWM0 Configuration) ... 109
P1 (PWM1 Configuration) ... 109
P2 (SPI_MISO) ... 110
M0 (PWM0 Duty Cycle) ... 110
M1 (PWM1 Duty Cycle) ... 111
P5 (SPI_MISO) ... 111
P6 (SPI_MOSI Configuration) ... 111
P7 (SPI_SSEL) ... 112
P8 (SPI_SCLK) ... 112
P9 (SPI_ATTN) ... 112
PR (Pull-up/Down Resistor Enable) ... 113
PD (Pull Up/Down Direction) ... 114
IU (I/O Output Enable) ... 114
IT (Samples before TX) ... 114
IS (Force Sample) ... 114
IO (Digital Output Level) ... 115
IC (DIO Change Detect) ... 115
IR (Sample Rate) ... 115
RP (RSSI PWM Timer) ... 116
I/O line passing commands ... 116
IA (I/O Input Address) ... 116
T0 (D0 Timeout) ... 117
T1 (D1 Output Timeout) ... 117
T2 (D2 Output Timeout) ... 117
T3 (D3 Output Timeout) ... 118
T4 (D4 Output Timeout) ... 118
T5 (D5 Output Timeout) ... 118
T6 (D6 Output Timeout) ... 118
T7 (D7 Output Timeout) ... 119
PT (PWM Output Timeout) ... 119
Diagnostic commands ... 119
VR (Firmware Version) ... 119
VL (Version Long) ... 119
HV (Hardware Version) ... 120
DB (Last Packet RSSI) ... 120
EC (CCA Failures) ... 120
EA (ACK Failures) ... 120
DD (Device Type Identifier) ... 121
Command mode options ... 121
CT (Command mode Timeout) ... 121
CN (Exit Command mode) ... 121
AC (Apply Changes) ... 122
GT (Guard Times) ... 122
CC (Command Character) ... 122

Operate in API mode

API mode overview ... 124
API frame specifications ... 124

API operation (AP parameter = 1) 124
API operation-with escaped characters (AP parameter = 2) 124
Start delimiter 125
Length 125
Frame data 125
Checksum 126
Calculate and verify checksums 126
Escaped characters in API frames 127
Frame descriptions 128
64-bit Transmit Request - 0x00 129
16-bit Transmit Request - 0x01 131
Local AT Command Request - 0x08 133
Queue Local AT Command Request - 0x09 135
Remote AT Command Request - 0x17 137
64-bit Receive Packet - 0x80 140
16-bit Receive Packet - 0x81 142
64-bit I/O Sample Indicator - 0x82 144
16-bit I/O Sample Indicator - 0x83 146
Local AT Command Response - 0x88 148
Transmit Status - 0x89 150
Modem Status - 0x8A 153
Modem status codes 154
Remote AT Command Response- 0x97 155

Regulatory information

United States (FCC) 159
OEM labeling requirements 159
FCC notices 159
FCC-approved antennas (2.4 GHz) 161
RF exposure 173
FCC publication 996369 related information 173
Europe (CE) 174
Maximum power and frequency specifications 174
CE and UKCA OEM labeling requirements 174
Listen Before Talk requirement 176
Declarations of conformity 176
Antennas 176
ISED (Innovation, Science and Economic Development Canada) 176
Labeling requirements 176
For XBee/XBee-PRO S2C 802.15.4 RF Module 177
For XBee S2C surface-mount 177
For XBee-PRO S2C surface-mount 177
For XBee S2C through-hole 177
For XBee-PRO S2C through-hole 177
Transmitters for detachable antennas 177
Detachable antenna 177
Firmware Version Identification number (FVIN) 178
Australia (RCM) 178
South Korea 178
IFETEL (Mexico) 182
OEM labeling requirements 183

Load 802.15.4 firmware on ZB devices

Background 186
Load 802.15.4 firmware 186

Migrate from XBee through-hole to surface-mount devices

Pin mapping 189
Mount the devices 190

PCB design and manufacturing

Recommended solder reflow cycle 193
Recommended footprint and keepout 193
Flux and cleaning 195
Rework 195

XBee/XBee-PRO S2C 802.15.4 RF Module User Guide

XBee/XBee-PRO S2C 802.15.4 RF Modules are embedded solutions providing wireless end-point connectivity to devices. These devices use the IEEE 802.15.4 networking protocol for fast point-to-multipoint or peer-to-peer networking. They are designed for high-throughput applications requiring low latency and predictable communication timing.

There are two footprints for the XBee/XBee-PRO S2C 802.15.4 RF Module hardware: through-hole (TH) and surface-mount (SMT). TH devices include a 20-pin header and require the placement of two 1x10 sockets on the carrier board for mounting the device. SMT devices include 37 pads. They are placed directly on the carrier board, which means they do not require holes or sockets for mounting.

The TH version may be useful for prototyping and production, but we recommend SMT for high-volume applications, as the component can be placed automatically by a pick-and-place machine and you save the cost of a socket on each board.

The XBee/XBee-PRO S2C 802.15.4 RF Module supports the needs of low-cost, low-power wireless sensor networks. The devices require minimal power and provide reliable delivery of data between devices. The devices operate within the ISM 2.4 GHz frequency band.

The XBee/XBee-PRO S2C 802.15.4 RF Module uses S2C hardware and the Silicon Labs EM357 chipset. As the name suggests, the 802.15.4 module is over-the-air compatible with our Legacy 802.15.4 module (S1 hardware), and the TH versions of the new product are also form factor compatible with designs that use the Legacy module.

Note OTA capability is only available when **MM** (Mac Mode) = 0 or 3

Applicable firmware and hardware 12

Applicable firmware and hardware

This manual supports the following firmware:

- 802.15.4 version 20xx

It supports the following hardware:

- XB24C TH
- XB24C SMT
- XBP24C TH
- XBP24C SMT

Safety instructions

Safety instructions 14
Инструкции за безопасност 14
Sigurnosne upute 15
Bezpečnostní instrukce 15
Sikkerhedsinstruktioner 16
Veiligheidsinstructies 16
Ohutusjuhised 17
Turvallisuusohjeet 17
Consignes de sécurité 18
Sicherheitshinweise 19
Οδηγίες ασφαλείας 19
Biztonsági utasítások 20
Istruzioni di sicurezza 20
Drošības instrukcijas 21
Saugos instrukcijos 21
Sikkerhetsinstruksjoner 22
Instrukcje bezpieczeństwa 22
Instruções de segurança 23
Instructiuni de siguranta 24
Bezpečnostné inštrukcie 24
Varnostna navodila 25
Módulos XBee 25
Säkerhets instruktioner 26

Safety instructions

XBee modules

- The XBee radio module cannot be guaranteed operation due to the radio link and so should not be used for interlocks in safety critical devices such as machines or automotive applications.
- The XBee radio module have not been approved for use in (this list is not exhaustive):
  - medical devices
  - nuclear applications
  - explosive or flammable atmospheres
- There are no user serviceable components inside the XBee radio module. Do not remove the shield or modify the XBee in any way. Modifications may exclude the module from any warranty and can cause the XBee radio to operate outside of regulatory compliance for a given country, leading to the possible illegal operation of the radio.
- Use industry standard ESD protection when handling the XBee module.
- Take care while handling to avoid electrical damage to the PCB and components.
- Do not expose XBee radio modules to water or moisture.
- Use this product with the antennas specified in the XBee module user guides.
- The end user must be told how to remove power from the XBee radio module or to locate the antennas 20 cm from humans or animals.

Инструкции за безопасност

XBee модули

- Радио модулът XBee не може да бъде гарантиран за работа поради радиовръзката и затова не трябва да се използва за блокировки в критични за безопасността устройства като машини или автомобилни приложения.
- Радио модулът XBee не е одобрен за използване в (този списък не е изчерпателен):
  - медицински изделия
  - ядрени приложения
  - експлозивна или запалима атмосфера
- В радиомодула XBee няма компоненти, които могат да се обслужват от потребителя. Не премахвайте щита и не модифицирайте XBee по никакъв начин. Модификациите могат да изключат модула от всякаква гаранция и да накарат радиото XBee да работи извън регулаторното съответствие за дадена държава, което води до възможна незаконна работа на радиото.
- Използвайте стандартна ESD защита при работа с XBee модула.
- Внимавайте, докато боравите, за да избегнете електрически повреди на печатната платка и компонентите.
- Не излагайте радиомодулите XBee на вода или влага.

- Използвайте този продукт с антените, посочени в ръководствата за потребителя на модула XBee.
- Крайният потребител трябва да бъде казано как да премахне захранването от радиомодула XBee или да разположи антените на 20 см от хора или животни.

Sigurnosne upute

XBee moduli

- Radio modulu XBee ne može se jamčiti rad zbog radio veze i stoga se ne smije koristiti za blokade u sigurnosnim kritičnim uređajima kao što su strojevi ili automobilske aplikacije.
- XBee radio modul nije odobren za upotrebu u (ovaj popis nije konačan):
  - medicinskih uređaja
  - nuklearne primjene
  - eksplozivne ili zapaljive atmosfere
- Unutar XBee radio modula nema komponenti koje može servisirati korisnik. Nemojte uklanjati štit i ni na koji način modificirati XBee. Izmjene mogu isključiti modul iz bilo kakvog jamstva i mogu uzrokovati rad XBee radija izvan usklađenosti s propisima za određenu zemlju, što može dovesti do mogućeg nezakonitog rada radija.
- Koristite standardnu ESD zaštitu pri rukovanju XBee modulom.
- Budite oprezni tijekom rukovanja kako biste izbjegli električna oštećenja PCB-a i komponenti.
- Ne izlažite XBee radio module vodi ili vlazi.
- Koristite ovaj proizvod s antenama navedenim u korisničkim vodičima za XBee modul.
- Krajnjem korisniku se mora reći kako da isključi napajanje iz XBee radio modula ili da locira antene 20 cm od ljudi ili životinja.

Bezpečnostní instrukce

moduly XBee

- Rádiový modul XBee nemůže zaručit provoz kvůli rádiovému spojení, a proto by neměl být používán pro blokování v zařízeních kritických z hlediska bezpečnosti, jako jsou stroje nebo automobilové aplikace.
- Rádiový modul XBee nebyl schválen pro použití v (tento seznam není vyčerpávající):
  - zdravotnické prostředky
  - jaderné aplikace
  - výbušné nebo hořlavé atmosféry
- Uvnitř rádiového modulu XBee nejsou žádné uživatelsky opravitelné součásti. Neodstraňujte štít ani nijak neupravujte XBee. Úpravy mohou vyjmout modul z jakékoli záruky a mohou způsobit, že rádio XBee bude fungovat mimo zákonnou shodu pro danou zemi, což povede k možnému nezákonnému provozu rádia.
- Při manipulaci s modulem XBee používejte standardní ochranu ESD.

- Při manipulaci buďte opatrní, aby nedošlo k elektrickému poškození desky plošných spojů a součástí.
- Nevystavujte rádiové moduly XBee vodě nebo vlhkosti.
- Používejte tento produkt s anténami uvedenými v uživatelských příručkách modulu XBee.
- Koncový uživatel musí být informován, jak odpojit napájení rádiového modulu XBee nebo jak umístit antény 20 cm od lidí nebo zvířat.

Sikkerhedsinstruktioner

XBee moduler

- XBee-radiomodulet kan ikke garanteres drift på grund af radioforbindelsen og bør derfor ikke bruges til aflåsninger i sikkerhedskritiske enheder såsom maskiner eller bilapplikationer.
- XBee-radiomodulet er ikke godkendt til brug i (denne liste er ikke udtømmende):
  - medicinsk udstyr
  - nukleare applikationer
  - eksplosive eller brandfarlige atmosfærer
- Der er ingen komponenter, der kan repareres af brugeren, inde i XBee-radiomodulet. Fjern ikke skjoldet eller modificer XBee på nogen måde. Ændringer kan udelukke modulet fra enhver garanti og kan få XBee-radioen til at fungere uden for lovgivningsoverholdelse for et givet land, hvilket kan føre til den mulige ulovlige drift af radioen.
- Brug industristandard ESD-beskyttelse, når du håndterer XBee-modulet.
- Vær forsigtig under håndteringen for at undgå elektrisk beskadigelse af printet og komponenterne.
- Udsæt ikke XBee-radiomoduler for vand eller fugt.
- Brug dette produkt med de antenner, der er specificeret i XBee-modulets brugervejledninger.
- Slutbrugeren skal fortælles, hvordan man fjerner strømmen fra XBee-radiomodulet eller placerer antennerne 20 cm fra mennesker eller dyr.

Veiligheidsinstructies

XBee-modules

- De werking van de XBee-radiomodule kan niet worden gegarandeerd vanwege de radioverbinding en mag daarom niet worden gebruikt voor vergrendelingen in veiligheidskritieke apparaten zoals machines of autotoepassingen.
- De XBee-radiomodule is niet goedgekeurd voor gebruik in (deze lijst is niet uitputtend):
  - o medische apparaten
  - o nucleaire toepassingen
  - o explosieve of ontvlambare atmosferen

- Er zijn geen door de gebruiker te onderhouden componenten in de XBee-radiomodule. Verwijder het schild niet en wijzig de XBee op geen enkele manier. Modificaties kunnen de module uitsluiten van enige garantie en kunnen ertoe leiden dat de XBee-radio werkt buiten de regelgeving voor een bepaald land, wat kan leiden tot de mogelijke illegale werking van de radio.
- Gebruik industriestandaard ESD-bescherming bij het hanteren van de XBee-module.
- Wees voorzichtig bij het hanteren om elektrische schade aan de printplaat en componenten te voorkomen.
- Stel XBee-radiomodules niet bloot aan water of vocht.
- Gebruik dit product met de antennes die zijn gespecificeerd in de gebruikershandleidingen van de XBee-module.
- De eindgebruiker moet worden verteld hoe de voeding van de XBee-radiomodule moet worden losgekoppeld of hoe de antennes op 20 cm van mensen of dieren moeten worden geplaatst.

Ohutusjuhised

XBee moodulid

- XBee raadiomooduli tööd ei saa raadiolingi tõttu garanteerida ja seetõttu ei tohiks seda kasutada ohutuse seisukohalt oluliste seadmete (nt masinad või autorakendused) blokeerimiseks.
- XBee raadiomoodulit ei ole heaks kiidetud kasutamiseks (see loetelu ei ole ammendav):
  - meditsiiniseadmed
  - tuumarakendused
  - plahvatusohtlik või tuleohtlik keskkond
- XBee raadiomoodulis ei ole kasutaja poolt hooldatavaid komponente. Ärge eemaldage kaitset ega muutke XBee mingil viisil. Muudatused võivad mooduli garantiist välja jätta ja XBee raadio töötab väljaspool antud riigi regulatiivseid vastavusi, põhjustades raadio võimaliku ebaseadusliku kasutamise.
- Kasutage XBee mooduli käsitsemisel tööstusharu standardset ESD-kaitset.
- Olge käsitsemisel ettevaatlik, et vältida PCB ja komponentide elektrikahjustusi.
- Ärge jätke XBee raadiomooduleid vee või niiskuse kätte.
- Kasutage seda toodet XBee mooduli kasutusjuhendis kirjeldatud antennidega.
- Lõppkasutajale tuleb öelda, kuidas XBee raadiomoodulilt toide eemaldada või antennid inimestest või loomadest 20 cm kaugusele paigutada.

Turvallisuusohjeet

XBee moduulit

- XBee-radiomoduulin toimintaa ei voida taata radiolinkin vuoksi, joten sitä ei tule käyttää turvallisuuden kannalta kriittisten laitteiden, kuten koneiden tai autosovellusten,

lukitsemiseen.

- XBee-radiomoduulia ei ole hyväksytty käytettäväksi (tämä luettelo ei ole tyhjentävä):
  - lääketieteelliset laitteet
  - ydinvoimasovellukset
  - räjähdysvaarallisiin tai syttyviin tiloihin
- XBee-radiomoduulin sisällä ei ole käyttäjän huollettavia osia. Älä poista suojusta tai muokkaa XBeetä millään tavalla. Muutokset voivat sulkea moduulin takuun ulkopuolelle ja aiheuttaa sen, että XBee-radio toimii tietyn maan säädöstenmukaisuuden ulkopuolella, mikä johtaa radion mahdolliseen laittomaan käyttöön.
- Käytä alan standardia ESD-suojausta käsitellessäsi XBee-moduulia.
- Ole varovainen käsitellessäsi, jotta vältät piirilevyn ja komponenttien sähkövauriot.
- Älä altista XBee-radiomoduuleja vedelle tai kosteudelle.
- Käytä tätä tuotetta XBee-moduulin käyttöoppaissa määriteltyjen antennien kanssa.
- Loppukäyttäjälle on kerrottava, kuinka XBee-radiomoduulin virta katkaistaan tai antennit sijoitetaan 20 cm:n etäisyydelle ihmisistä tai eläimistä.

Consignes de sécurité

Modules XBee

- Le fonctionnement du module radio XBee ne peut pas être garanti en raison de la liaison radio et ne doit donc pas être utilisé pour les verrouillages dans des dispositifs critiques pour la sécurité tels que des machines ou des applications automobiles.
- Le module radio XBee n'a pas été approuvé pour une utilisation dans (cette liste n'est pas exhaustive) :
  - dispositifs médicaux
  - applications nucléaires
  - atmosphères explosives ou inflammables
- Il n'y a aucun composant réparable par l'utilisateur à l'intérieur du module radio XBee. Ne retirez pas la protection et ne modifiez en aucune façon le XBee. Les modifications peuvent exclure le module de toute garantie et peuvent entraîner le fonctionnement de la radio XBee en dehors de la conformité réglementaire pour un pays donné, ce qui peut entraîner un fonctionnement illégal de la radio.
- Utilisez la protection ESD standard de l'industrie lors de la manipulation du module XBee.
- Soyez prudent lors de la manipulation afin d'éviter des dommages électriques au circuit imprimé et aux composants.
- N'exposez pas les modules radio XBee à l'eau ou à l'humidité.
- Utilisez ce produit avec les antennes spécifiées dans les guides d'utilisation du module XBee.
- L'utilisateur final doit savoir comment couper l'alimentation du module radio XBee ou placer les antennes à 20 cm des humains ou des animaux.

Sicherheitshinweise

XBee-Module

- Der Betrieb des XBee-Funkmoduls kann aufgrund der Funkverbindung nicht garantiert werden und sollte daher nicht für Verriegelungen in sicherheitskritischen Geräten wie Maschinen oder Automobilanwendungen verwendet werden.
- Das XBee-Funkmodul ist nicht zugelassen für den Einsatz in (diese Liste ist nicht vollständig):
  - Medizinprodukte
  - nukleare Anwendungen
  - explosive oder brennbare Atmosphären
- Das XBee-Funkmodul enthält keine vom Benutzer zu wartenden Komponenten. Entfernen Sie nicht die Abschirmung oder modifizieren Sie das XBee in irgendeiner Weise. Modifikationen können das Modul von jeglicher Garantie ausschließen und dazu führen, dass das XBee-Funkgerät außerhalb der gesetzlichen Vorschriften für ein bestimmtes Land betrieben wird, was zu einem möglichen illegalen Betrieb des Funkgeräts führen kann.
- Verwenden Sie beim Umgang mit dem XBee-Modul ESD-Schutz nach Industriestandard.
- Seien Sie vorsichtig bei der Handhabung, um elektrische Schäden an der Leiterplatte und den Komponenten zu vermeiden.
- XBee-Funkmodule nicht Wasser oder Feuchtigkeit aussetzen.
- Verwenden Sie dieses Produkt mit den in den Benutzerhandbüchern des XBee-Moduls angegebenen Antennen.
- Dem Endbenutzer muss mitgeteilt werden, wie er das XBee-Funkmodul von der Stromversorgung trennt oder die Antennen 20 cm von Menschen oder Tieren entfernt aufstellt.

Οδηγίες ασφαλείας

Μονάδες XBee

- Η μονάδα ραδιοφώνου XBee δεν μπορεί να εγγυηθεί τη λειτουργία της λόγω της ραδιοζεύξης και επομένως δεν πρέπει να χρησιμοποιείται για ασφάλειες σε κρίσιμες για την ασφάλεια συσκευές, όπως μηχανήματα ή εφαρμογές αυτοκινήτου.
- Η μονάδα ραδιοφώνου XBee δεν έχει εγκριθεί για χρήση σε (αυτή η λίστα δεν είναι εξαντλητική):
  - ιατροτεχνολογικά προϊόντα
  - πυρηνικές εφαρμογές
  - εκρηκτικές ή εύφλεκτες ατμόσφαιρες
- Δεν υπάρχουν εξαρτήματα που να μπορούν να επισκευαστούν από το χρήστη μέσα στη μονάδα ραδιοφώνου XBee. Μην αφαιρείτε την ασπίδα και μην τροποποιείτε το XBee με κανέναν τρόπο. Οι τροποποιήσεις ενδέχεται να αποκλείουν τη μονάδα από οποιαδήποτε εγγύηση και μπορεί να προκαλέσουν τη λειτουργία του ραδιοφώνου XBee εκτός της συμμόρφωσης με τους κανονισμούς για μια δεδομένη χώρα, οδηγώντας σε πιθανή παράνομη λειτουργία του ραδιοφώνου.
- Χρησιμοποιήστε βιομηχανική προστασία ESD κατά το χειρισμό της μονάδας XBee.

- Προσέχετε κατά το χειρισμό για να αποφύγετε ηλεκτρική βλάβη στο PCB και στα εξαρτήματα.
- Μην εκθέτετε τις μονάδες ραδιοφώνου XBee σε νερό ή υγρασία.
- Χρησιμοποιήστε αυτό το προϊόν με τις κεραίες που καθορίζονται στους οδηγούς χρήσης της μονάδας XBee.
- Πρέπει να ενημερωθεί ο τελικός χρήστης πώς να αφαιρέσει την τροφοδοσία από τη μονάδα ραδιοφώνου XBee ή να εντοπίσει τις κεραίες σε απόσταση 20 cm από ανθρώπους ή ζώα.

Biztonsági utasítások

XBee modulok

• Az XBee rádiómodul működése nem garantálható a rádiókapcsolat miatt, ezért nem használható biztonsági szempontból kritikus eszközök, például gépek vagy autóipari alkalmazások reteszelésére.

• Az XBee rádiómodul nem engedélyezett a következő területeken való használatra (ez a lista nem teljes):

o orvosi eszközök

o nukleáris alkalmazások

o robbanásveszélyes vagy gyúlékony légkör

• Az XBee rádiómodulban nincsenek felhasználó által javítható alkatrészek. Ne távolítsa el a pajzsot, és semmilyen módon ne módosítsa az XBee-t. A módosítások kizárhatják a modult a jótállásból, és az XBee rádió működését az adott ország jogszabályi előírásaitól eltérően okozhatják, ami a rádió esetleges illegális működéséhez vezethet.

• Az XBee modul kezelésekor használjon ipari szabványos ESD védelmet.

• A kezelés során ügyeljen arra, hogy elkerülje a PCB és az alkatrészek elektromos károsodását.

• Ne tegye ki az XBee rádiómodulokat víznek vagy nedvességnek.

• Használja ezt a terméket az XBee modul használati útmutatójában meghatározott antennákkal.

• A végfelhasználót tájékoztatni kell arról, hogyan távolítsa el az XBee rádiómodul áramellátását, vagy hogyan helyezze el az antennákat az emberektől vagy állatoktól 20 cm-re.

Istruzioni di sicurezza

Moduli XBee

- Il funzionamento del modulo radio XBee non può essere garantito a causa del collegamento radio e quindi non deve essere utilizzato per gli interblocchi in dispositivi critici per la sicurezza come macchine o applicazioni automobilistiche.
- Il modulo radio XBee non è stato approvato per l'uso in (questo elenco non è esaustivo):
  - dispositivi medici
  - applicazioni nucleari
  - atmosfere esplosive o infiammabili
- Non ci sono componenti riparabili dall'utente all'interno del modulo radio XBee. Non rimuovere lo scudo o modificare in alcun modo l'XBee. Le modifiche possono escludere il modulo da qualsiasi garanzia e possono causare il funzionamento della radio XBee al di fuori della conformità normativa per un determinato paese, portando al possibile funzionamento

illegale della radio.
- Utilizzare la protezione ESD standard del settore durante la manipolazione del modulo XBee.
- Prestare attenzione durante la manipolazione per evitare danni elettrici al PCB e ai componenti.
- Non esporre i moduli radio XBee all'acqua o all'umidità.
- Utilizzare questo prodotto con le antenne specificate nelle guide per l'utente del modulo XBee.
- L'utente finale deve sapere come togliere l'alimentazione al modulo radio XBee o come posizionare le antenne a 20 cm da persone o animali.

Drošības instrukcijas

XBee moduļi

- Radio moduļa XBee darbība nevar tikt garantēta radio savienojuma dēļ, tāpēc to nevajadzētu izmantot bloķēšanai drošības ziņā kritiskās ierīcēs, piemēram, mašīnās vai automobiļos.
- XBee radio modulis nav apstiprināts lietošanai (šis saraksts nav pilnīgs):
  - medicīniskās ierīces
  - kodolprogrammas
  - sprādzienbīstamā vai uzliesmojošā vidē
- XBee radio moduļa iekšpusē nav neviena komponenta, ko lietotājs varētu apkopt. Nenoņemiet vairogu un nekādā veidā nepārveidojiet XBee. Modifikācijas rezultātā modulis var tikt izslēgts no jebkādas garantijas un var izraisīt XBee radio darbību, kas neatbilst noteiktās valsts normatīvajiem aktiem, izraisot iespējamu nelegālu radio darbību.
- Strādājot ar XBee moduli, izmantojiet nozares standarta ESD aizsardzību.
- Rīkojoties, rīkojieties uzmanīgi, lai izvairītos no PCB un komponentu elektriskiem bojājumiem.
- Nepakļaujiet XBee radio moduļus ūdens vai mitruma iedarbībai.
- Izmantojiet šo izstrādājumu ar antenām, kas norādītas XBee moduļa lietotāja rokasgrāmatās.
- Galalietotājam ir jāpaskaidro, kā atvienot XBee radio moduļa strāvu vai novietot antenas 20 cm attālumā no cilvēkiem vai dzīvniekiem.

Saugos instrukcijos

XBee moduliai

- Negalima garantuoti, kad „XBee“ radijo modulis veiks dėl radijo ryšio, todėl jo neturėtų būti naudojamas blokuoti saugai svarbiuose įrenginiuose, pvz., mašinose ar automobiliuose.
- XBee radijo modulis nebuvo patvirtintas naudoti (šis sąrašas nėra baigtinis):
  - medicinos prietaisai
  - branduolinės programos
  - sprogioje ar degioje aplinkoje

- XBee radijo modulio viduje nėra komponentų, kuriuos vartotojas galėtų prižiūrėti. Jokiu būdu nenuimkite skydo ir nekeiskite XBee. Dėl modifikacijų moduliui gali būti netaikoma jokia garantija, o „XBee“ radijas gali veikti ne pagal tam tikros šalies norminius reikalavimus, o tai gali sukelti neteisėtą radijo naudojimą.
- Dirbdami su XBee moduliu naudokite pramonės standartinę ESD apsaugą.
- Dirbdami būkite atsargūs, kad nepažeistumėte PCB ir komponentų.
- Saugokite XBee radijo modulius nuo vandens ar drėgmės.
- Naudokite šį gaminį su antenomis, nurodytomis XBee modulio vartotojo vadove.
- Galutiniam vartotojui turi būti paaiškinta, kaip atjungti XBee radijo modulio maitinimą arba nustatyti antenas 20 cm atstumu nuo žmonių ar gyvūnų.

Sikkerhetsinstruksjoner

XBee-moduler

- XBee-radiomodulen kan ikke garanteres drift på grunn av radiolinken, og bør derfor ikke brukes til forriglinger i sikkerhetskritiske enheter som maskiner eller bilapplikasjoner.
- XBee-radiomodulen er ikke godkjent for bruk i (denne listen er ikke uttømmende):
  - medisinsk utstyr
  - kjernefysiske applikasjoner
  - eksplosive eller brennbare atmosfærer
- Det er ingen komponenter som kan repareres av brukeren inne i XBee-radiomodulen. Ikke fjern skjoldet eller modifiser XBee på noen måte. Endringer kan ekskludere modulen fra enhver garanti og kan føre til at XBee-radioen fungerer utenfor regelverket for et gitt land, noe som kan føre til ulovlig drift av radioen.
- Bruk industristandard ESD-beskyttelse når du håndterer XBee-modulen.
- Vær forsiktig ved håndtering for å unngå elektrisk skade på PCB og komponenter.
- Ikke utsett XBee radiomoduler for vann eller fuktighet.
- Bruk dette produktet med antennene spesifisert i XBee-modulens brukerveiledninger.
- Sluttbrukeren må bli fortalt hvordan man fjerner strømmen fra XBee-radiomodulen eller plasserer antennene 20 cm fra mennesker eller dyr.

Instrukcje bezpieczeństwa

Moduły XBee

- Moduł radiowy XBee nie może zagwarantować działania ze względu na łącze radiowe, dlatego nie należy go używać do blokad w urządzeniach o krytycznym znaczeniu dla bezpieczeństwa, takich jak maszyny lub aplikacje motoryzacyjne.
- Moduł radiowy XBee nie został dopuszczony do użytku w (lista ta nie jest wyczerpująca):

  - wyroby medyczne
  - zastosowania nuklearne
  - atmosferach wybuchowych lub łatwopalnych
- Wewnątrz modułu radiowego XBee nie ma żadnych elementów, które mogłyby być serwisowane przez użytkownika. Nie zdejmuj osłony ani nie modyfikuj XBee w żaden sposób. Modyfikacje mogą wykluczyć moduł z jakiejkolwiek gwarancji i spowodować, że radio XBee będzie działać niezgodnie z przepisami obowiązującymi w danym kraju, co może prowadzić do nielegalnego działania radia.
- Podczas obsługi modułu XBee należy stosować standardową ochronę ESD.
- Podczas obsługi należy zachować ostrożność, aby uniknąć uszkodzeń elektrycznych PCB i komponentów.
- Nie wystawiaj modułów radiowych XBee na działanie wody lub wilgoci.
- Używaj tego produktu z antenami określonymi w podręcznikach użytkownika modułu XBee.
- Użytkownik końcowy musi zostać poinformowany, jak odłączyć zasilanie modułu radiowego XBee lub zlokalizować anteny w odległości 20 cm od ludzi lub zwierząt.

Instruções de segurança

Módulos XBee

- • O módulo de rádio XBee não pode ter operação garantida devido ao link de rádio e, portanto, não deve ser usado para intertravamentos em dispositivos críticos de segurança, como máquinas ou aplicações automotivas.
- • O módulo de rádio XBee não foi aprovado para uso em (esta lista não é exaustiva):
  - o dispositivos médicos
  - o aplicações nucleares
  - o atmosferas explosivas ou inflamáveis
- • Não há componentes que possam ser reparados pelo usuário dentro do módulo de rádio XBee. Não remova a blindagem nem modifique o XBee de forma alguma. As modificações podem excluir o módulo de qualquer garantia e fazer com que o rádio XBee opere fora da conformidade regulatória de um determinado país, levando à possível operação ilegal do rádio.
- • Use proteção ESD padrão da indústria ao manusear o módulo XBee.
- • Tome cuidado ao manusear para evitar danos elétricos à PCB e aos componentes.
- • Não exponha os módulos de rádio XBee à água ou umidade.
- • Use este produto com as antenas especificadas nos guias do usuário do módulo XBee.
- • O usuário final deve ser informado sobre como remover a energia do módulo de rádio XBee ou localizar as antenas a 20 cm de humanos ou animais.

Instructiuni de siguranta

module XBee

- Nu se poate garanta funcţionarea modulului radio XBee din cauza conexiunii radio şi, prin urmare, nu trebuie utilizat pentru interblocări în dispozitive critice pentru siguranță, cum ar fi maşini sau aplicaţii auto.
- Modulul radio XBee nu a fost aprobat pentru utilizare în (această listă nu este exhaustivă):
  - dispozitive medicale
  - aplicaţii nucleare
  - atmosfere explozive sau inflamabile
- Nu există componente care să poată fi reparate de utilizator în interiorul modulului radio XBee. Nu îndepărtaţi scutul şi nu modificaţi XBee în niciun fel. Modificările pot exclude modulul din orice garanţie şi pot face ca radioul XBee să funcţioneze în afara conformităţii cu reglementările pentru o anumită ţară, ceea ce duce la o posibilă funcţionare ilegală a radioului.
- Folosiţi protecţia ESD standard în industrie când manipulaţi modulul XBee.
- Aveţi grijă în timpul manipulării pentru a evita deteriorarea electrică a PCB-ului şi a componentelor.
- Nu expuneţi modulele radio XBee la apă sau umezeală.
- Utilizaţi acest produs cu antenele specificate în ghidurile utilizatorului modulului XBee.
- Utilizatorului final trebuie să i se spună cum să scoată alimentarea de la modulul radio XBee sau să găsească antenele la 20 cm de oameni sau animale.

Bezpečnostné inštrukcie

moduly XBee

- Rádiový modul XBee nemôže byť zaručený kvôli rádiovému spojeniu, a preto by sa nemal používať na blokovanie v zariadeniach kritických z hľadiska bezpečnosti, ako sú stroje alebo automobilové aplikácie.
- Rádiový modul XBee nebol schválený na použitie v (tento zoznam nie je úplný):
  - zdravotnícke pomôcky
  - jadrové aplikácie
  - výbušné alebo horľavé atmosféry
- Vo vnútri rádiového modulu XBee sa nenachádzajú žiadne používateľsky opraviteľné komponenty. Neodstraňujte štít ani žiadnym spôsobom neupravujte XBee. Úpravy môžu vyňať modul zo záruky a môžu spôsobiť, že rádio XBee bude fungovať mimo zhody s predpismi pre danú krajinu, čo vedie k možnej nezákonnej prevádzke rádia.
- Pri manipulácii s modulom XBee používajte štandardnú ochranu pred ESD.
- Pri manipulácii buďte opatrní, aby ste predišli elektrickému poškodeniu dosky plošných spojov a komponentov.
- Rádiové moduly XBee nevystavujte vode ani vlhkosti.

- Tento produkt používajte s anténami špecifikovanými v používateľských príručkách modulu XBee.
- Koncový používateľ musí byť informovaný o tom, ako odpojiť napájanie rádiového modulu XBee alebo ako umiestniť antény 20 cm od ľudí alebo zvierat.

Varnostna navodila

XBee moduli

- Radijskega modula XBee ni mogoče zagotoviti delovanja zaradi radijske povezave in ga zato ne smete uporabljati za zaklepanje v varnostno kritičnih napravah, kot so stroji ali avtomobilske aplikacije.
- Radijski modul XBee ni bil odobren za uporabo v (ta seznam ni izčrpen):
  - medicinskih pripomočkov
  - jedrske aplikacije
  - eksplozivne ali vnetljive atmosfere
- V radijskem modulu XBee ni komponent, ki bi jih lahko popravil uporabnik. Ne odstranjujte ščita in na noben način ne spreminjajte XBee. Spremembe lahko modul izključijo iz kakršne koli garancije in lahko povzročijo, da radio XBee deluje zunaj zakonske skladnosti za dano državo, kar vodi do možnega nezakonitega delovanja radia.
- Pri ravnanju z modulom XBee uporabite standardno industrijsko zaščito pred ESD.
- Pri rokovanju pazite, da se izognete električnim poškodbam tiskanega vezja in komponent.
- Radijskih modulov XBee ne izpostavljajte vodi ali vlagi.
- Ta izdelek uporabljajte z antenami, navedenimi v uporabniških priročnikih modula XBee.
- Končnemu uporabniku je treba povedati, kako odstraniti napajanje z radijskega modula XBee ali naj locira antene 20 cm od ljudi ali živali.

Módulos XBee

- No se puede garantizar el funcionamiento del módulo de radio XBee debido al enlace de radio y, por lo tanto, no debe usarse para enclavamientos en dispositivos críticos para la seguridad, como máquinas o aplicaciones automotrices.
- El módulo de radio XBee no ha sido aprobado para su uso en (esta lista no es exhaustiva):
  - dispositivos médicos
  - aplicaciones nucleares
  - atmósferas explosivas o inflamables
- No hay componentes reparables por el usuario dentro del módulo de radio XBee. No quite el escudo ni modifique el XBee de ninguna manera. Las modificaciones pueden excluir el módulo de cualquier garantía y pueden hacer que la radio XBee funcione fuera del cumplimiento normativo de un país determinado, lo que puede provocar una operación ilegal de la radio.
- Utilice la protección ESD estándar de la industria al manipular el módulo XBee.
- Tenga cuidado al manipularlo para evitar daños eléctricos en la PCB y los componentes.

- No exponga los módulos de radio XBee al agua ni a la humedad.
- Utilice este producto con las antenas especificadas en las guías de usuario del módulo XBee.
- Se debe indicar al usuario final cómo desconectar la alimentación del módulo de radio XBee o ubicar las antenas a 20 cm de personas o animales.

Säkerhets instruktioner

XBee-moduler

- XBee-radiomodulen kan inte garanteras funktion på grund av radiolänken och bör därför inte användas för förreglingar i säkerhetskritiska enheter som maskiner eller biltillämpningar.
- XBee-radiomodulen har inte godkänts för användning i (denna lista är inte uttömmande):
  - medicinsk utrustning
  - kärnkraftstillämpningar
  - explosiv eller brandfarlig atmosfär
- Det finns inga komponenter som användaren kan reparera inuti XBee-radiomodulen. Ta inte bort skölden eller modifiera XBee på något sätt. Ändringar kan utesluta modulen från alla garantier och kan göra att XBee-radion fungerar utanför bestämmelserna för ett visst land, vilket kan leda till att radion kan användas olagligt.
- Använd industristandard ESD-skydd när du hanterar XBee-modulen.
- Var försiktig vid hanteringen för att undvika elektriska skador på kretskortet och komponenterna.
- Utsätt inte XBee radiomoduler för vatten eller fukt.
- Använd den här produkten med antennerna som specificeras i XBee-modulens användarguider.
- Slutanvändaren måste informeras om hur man kopplar bort strömmen från XBee-radiomodulen eller för att placera antennerna 20 cm från människor eller djur.

Technical specifications

Performance specifications 28
Power requirements 28
General specifications 29
Regulatory conformity summary 29
Serial communication specifications 30
GPIO specifications 31

Performance specifications

The following table describes the performance specifications for the devices.

Note Range figure estimates are based on free-air terrain with limited sources of interference. Actual range will vary based on transmitting power, orientation of transmitter and receiver, height of transmitting antenna, height of receiving antenna, weather conditions, interference sources in the area, and terrain between receiver and transmitter, including indoor and outdoor structures such as walls, trees, buildings, hills, and mountains.

Specification	XBee value	XBee-PRO value
Indoor / urban range	Up to 200 ft (60 m)	Up to 300 ft. (90 m)
Outdoor RF line-of-sight range	Up to 4000 ft (1200 m)	Up to 2 miles (3200 m)
Transmit power output (software selectable)	6.3 mW (8 dBm), Boost mode[1] 3.1 mW (5 dBm), Normal mode Channel 26 max power is 0.3 mW (-5 dBm)	63 mW (18 dBm)[2]
RF data rate	250,000 b/s	250,000 b/s
Maximum data throughput	Up to 96,000 b/s	Up to 96,000 b/s
UART interface data rate	1200 b/s to 250,000 b/s	1200 b/s to 250,000 b/s
SPI data rate	Up to 5 Mb/s (burst)	Up to 5 Mb/s (burst)
Receiver sensitivity	-102 dBm, Boost mode -100 dBm, Normal mode	-101 dBm

Power requirements

The following table describes the power requirements for the XBee/XBee-PRO S2C 802.15.4 RF Module.

Specification	XBee	XBee-PRO
Supply voltage	2.1 - 3.6 V	2.7 - 3.6 V
Transmit current (typical, VCC = 3.3 V)	45 mA (8 dBm, Boost mode) 33 mA (5 dBm, Normal mode)	120 mA (18 dBm)
Idle / receive current (typical, VCC = 3.3 V)	31 mA (Boost mode) 28 mA (Normal mode)	31 mA
Power-down current	<1 uA @ 25C	<1 uA @ 25C

[1]Boost mode enabled by default; see PM (Power Mode).

[2]See Regulatory information for region-specific certification requirements.

General specifications

The following table describes the general specifications for the devices.

Specification	XBee-PRO
Operating frequency	ISM 2.4 GHz
Supported channels	12 - 23
Form factor	TH: 2.438 x 3.294 cm (0.960 x 1.297 in) SMT: 2.199 x 3.4 x 0.305 cm (0.866 x 1.33 x 0.120 in)
Operating temperature	-40 to 85 °C (industrial)
Antenna options	SMT: RF pad, PCB antenna, or U.FL connector

Specification	XBee	XBee-PRO
Operating frequency	ISM 2.4 GHz	
Supported channels	11 - 26	12 - 23
Form factor	TH: 2.438 x 2.761 cm (0.960 x 1.087 in) SMT: 2.199 x 3.4 x 0.305 cm (0.866 x 1.33 x 0.120 in)	TH: 2.438 x 3.294 cm (0.960 x 1.297 in) SMT: 2.199 x 3.4 x 0.305 cm (0.866 x 1.33 x 0.120 in)
Operating temperature	-40 to 85 °C (industrial)	
Antenna options	TH: PCB antenna, U.FL connector, RPSMA connector, or integrated wire SMT: RF pad, PCB antenna, or U.FL connector	

Regulatory conformity summary

This table describes the agency approvals for the devices.

Country	XBee (surface-mount)	XBee-PRO (surface-mount)	XBee (through-hole)	XBee-PRO (through-hole)
United States (FCC Part 15.247)	FCC ID: MCQ-XBS2C	FCC ID: MCQ-PS2CSM	FCC ID: MCQ-S2CTH	FCC ID: MCQ-PS2CTH
Innovation, Science and Economic Development Canada (ISED)	IC: 1846A-XBS2C	IC: 1846A-PS2CSM	IC: 1846A-S2CTH	IC: 1846A-PS2CTH
FCC/IC test transmit power output range	-26 to +8 dBm	-0.7 to +19.4 dBm	-26 to +8 dBm	+1 to +19 dBm

Country	XBee (surface-mount)	XBee-PRO (surface-mount)	XBee (through-hole)	XBee-PRO (through-hole)
Europe (CE)	Yes	-	Yes	-
Australia	RCM	RCM	RCM	RCM
Japan	R201WW10215369		R210- 105563	
South Korea	MSIP-CRM-DIG-XBee-S2C		MSIP-CRM-DIG-XBee-S2C-TH	
RoHS	Compliant			

Serial communication specifications

The XBee/XBee-PRO S2C 802.15.4 RF Module supports both Universal Asynchronous Receiver / Transmitter (UART) and Serial Peripheral Interface (SPI) serial connections.

UART pin assignments

The SC1 (Serial Communication Port 1) of the Ember 357 is connected to the UART port. The following table provides the UART pin assignments.

Specifications UART pins	Module pin number XBee (surface-mount)	XBee (through-hole)
DOUT	3	2
DIN / $\overline{\text{CONFIG}}$	4	3
$\overline{\text{CTS}}$ / DIO7	25	12
$\overline{\text{RTS}}$ / DIO6	29	16

SPI pin assignments

The SC2 (Serial Communication Port 2) of the Ember 357 is connected to the SPI port.

Specifications SPI pins	Module pin number XBee (surface-mount)	XBee (through-hole)
SPI_SCLK	14	18
SPI_$\overline{\text{SSEL}}$	15	17
SPI_MOSI	16	11
SPI_MISO	17	4
SPI_$\overline{\text{ATTN}}$	12	19

GPIO specifications

XBee/XBee-PRO S2C 802.15.4 RF Modules have 15 General Purpose Input / Output (GPIO) ports available. The exact list depends on the device configuration, as some GPIO pads are used for purposes such as serial communication.

GPIO Electrical Specification	Value
Low Schmitt switching threshold	0.42 - 0.5 x VCC
High Schmitt switching threshold	0.62 - 0.8 x VCC
Input current for logic 0	-0.5 µA
Input current for logic 1	0.5 µA
Input pull-up resistor value	29 kΩ
Input pull-down resistor value	29 kΩ
Output voltage for logic 0	0.18 x VCC (maximum)
Output voltage for logic 1	0.82 x VCC (minimum)
Output source/sink current for pad numbers 3, 4, 5, 10, 12, 14, 15, 16, 17, 25, 26, 28, 29, 30, and 32 on the SMT modules	4 mA
Output source/sink current for pin numbers 2, 3, 4, 9, 12, 13, 15, 16, 17, and 19 on the TH modules	4 mA
Output source/sink current for pad numbers 7, 8, 24, 31, and 33 on the SMT modules	8 mA
Output source/sink current for pin numbers 6, 7, 11, 18, and 20 on the TH modules	8 mA
Total output current (for GPIO pads)	40 mA

Hardware

Antenna options 33
Mechanical drawings 33
Mounting considerations 34
Pin signals 35
Design notes 38

Antenna options

The ranges specified are typical for the integrated whip—1.5 dBi—and dipole—2.1 dBi—antennas. The printed circuit board (PCB) antenna option provides advantages in its form factor; however, it typically yields shorter range than the whip and dipole antenna options when transmitting outdoors. For more information, see XBee and XBee-PRO OEM RF Module Antenna Considerations Application Note.

Mechanical drawings

The following mechanical drawings of the XBee/XBee-PRO S2C 802.15.4 RF Module show all dimensions in inches. The first drawing shows the surface-mount device (antenna options not shown).

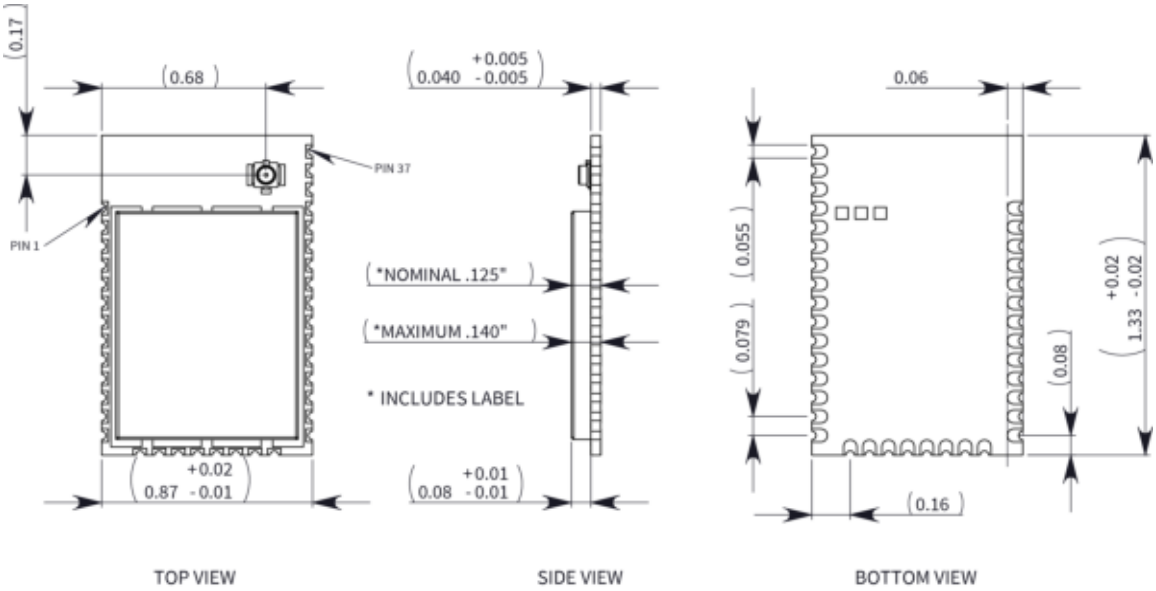

The following drawings show the standard (non-PRO) through-hole device.

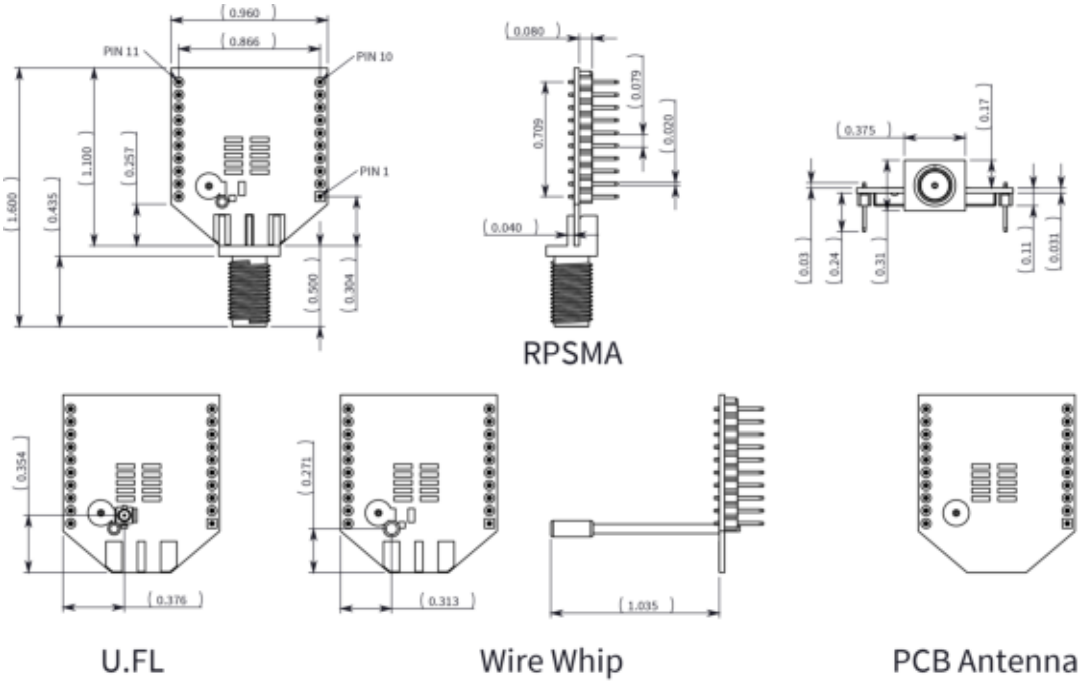

The following drawings show the XBee-PRO through-hole device.

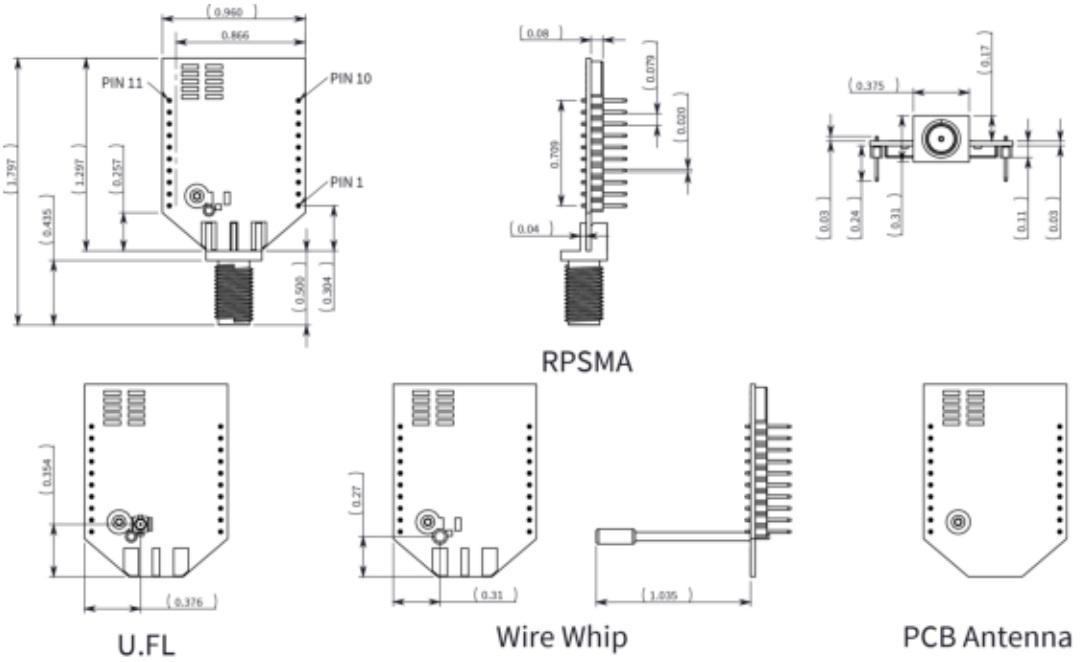

Mounting considerations

We design the through-hole module to mount into a receptacle so that you do not have to solder the module when you mount it to a board. The development kits may contain RS-232 and USB interface boards that use two 20-pin receptacles to receive modules.

The following illustration shows the module mounting into the receptacle on the RS-232 interface board.

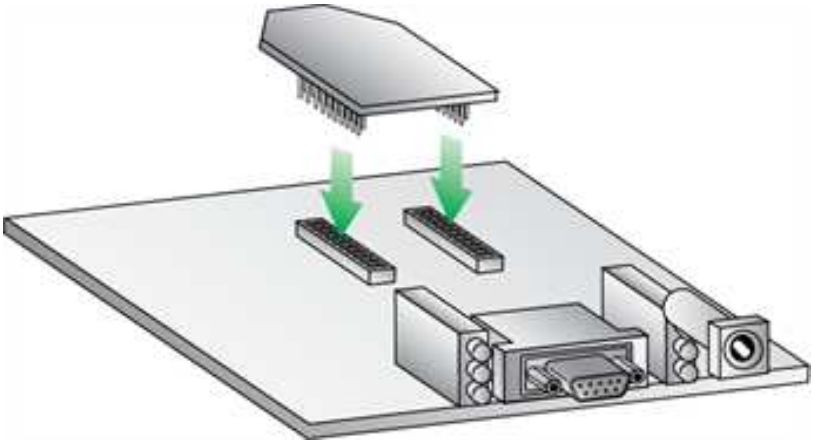

Century Interconnect and Samtec manufacture the 2 x 10 pin 2 mm spacing receptacles on Digi development boards. Several other manufacturers provide comparable mounting solutions; we currently use the following receptacles:

- Through-hole single-row receptacles: Samtec part number: MMS-110-01-L-SV (or equivalent)
- Surface-mount double-row receptacles: Century Interconnect part number: CPRMSL20-D-0-1 (or equivalent)
- Surface-mount single-row receptacles: Samtec part number: SMM-110-02-SM-S

Note We recommend that you print an outline of the module on the board to indicate the correct orientation for mounting the module.

Pin signals

The following image shows the pin numbers; it shows the device's top sides, the shields are on the bottom.

The following table shows the pin assignments for the through-hole device. In the table, low-asserted signals have a horizontal line above signal name.

Pin	Name	Direction	Description
1	VCC	-	Power supply

Pin	Name	Direction	Description
2	DOUT	Output	UART data out
3	DIN/$\overline{\text{CONFIG}}$	Input	UART data In
4	SPI_MISO	Output	Serial Peripheral Interface (SPI) Data Out
5	$\overline{\text{RESET}}$	Input	Module reset (reset pulse must be at least 200 ns). This must be driven as an open drain/collector. The device drives this line low when a reset occurs. Never drive this line high.
6	PWM0/RSSI PWM	Output	PWM output 0 / RX signal strength indicator
7	PWM1	Output	PWM output 1
8	[Reserved]	-	Do not connect
9	DI8/$\overline{\text{SLEEP_RQ}}$/DTR	Input	Pin sleep control line or digital input 8
10	GND	-	Ground
11	DIO4/SPI_MOSI	Both	Digital I/O 4 / SPI Data In
12	DIO7/$\overline{\text{CTS}}$	Both	Digital I/O 7 / Clear-to-send flow control
13	ON/$\overline{\text{SLEEP}}$	Output	Device sleep status indicator
14	V_{REF}	-	Feature not supported on this device. Used on other XBee devices for analog voltage reference.
15	DIO5/ASSOC	Both	Digital I/O 5 / Associated indicator
16	DIO6/$\overline{\text{RTS}}$	Both	Digital I/O 6 / Request-to-send flow control
17	$\overline{\text{DIO3}}$/AD3/SPI_$\overline{\text{SSEL}}$	Both	Digital I/O 3 / Analog input 3 / SPI select
18	DIO2/AD2/SPI_CLK	Both	Digital I/O 2 / Analog input 2 / SPI clock
19	$\overline{\text{DIO1}}$/AD1/SPI_$\overline{\text{ATTN}}$	Both	Digital I/O 1 / Analog input 1 / SPI Attention
20	DIO0/AD0	Both	Digital I/O 0 / Analog input 0

The following table shows the pin assignments for the surface-mount device.

Pin	Name	Direction	Function
1	GND	-	Ground
2	VCC	-	Power supply
3	DOUT	Output	UART data out
4	DIN/$\overline{\text{CONFIG}}$	Input	UART data in

Pin	Name	Direction	Function
5	[Reserved]	Output	Do not connect
6	$\overline{\text{RESET}}$	Input	Module reset (reset pulse must be at least 200 ns). This must be driven as an open drain/collector. The device drives this line low when a reset occurs. Never drive this line high.
7	PWM0/RSSI PWM	Output	PWM output 0 / RX signal strength indicator
8	PWM1	Output	PWM output 1
9	[Reserved]	-	Do not connect
10	DI8/SLEEP_RQ/$\overline{\text{DTR}}$	Input	Pin sleep control line or digital input 8
11	GND	-	Ground
12	$\overline{\text{SPI_ATTN}}$/$\overline{\text{BOOTMODE}}$	Output	SPI Attention. Do not tie low on reset.
13	GND	-	Ground
14	SPI_CLK	Input	SPI clock
15	SPI_$\overline{\text{SSEL}}$	Input	SPI select
16	SPI_MOSI	Input	SPI Data In
17	SPI_MISO	Output	SPI Data Out
18	[Reserved]	-	Do not connect
19	[Reserved]	-	Do not connect
20	[Reserved]	-	Do not connect
21	[Reserved]	-	Do not connect
22	GND	-	Ground
23	[Reserved]	-	Do not connect
24	DIO4	Both	Digital I/O 4
25	DIO7/$\overline{\text{CTS}}$	Both	Digital I/O 7 / Clear-to-send flow control
26	ON/$\overline{\text{SLEEP}}$	Output	Device sleep status indicator
27	V_{REF}	-	Feature not supported on this device. Used on other XBee devices for analog voltage reference.
28	DIO5/ASSOC	Both	Digital I/O 5 / Associated indicator
29	DIO6/$\overline{\text{RTS}}$	Both	Digital I/O 6 / Request-to-send flow control
30	DIO3/AD3	Both	Digital I/O 3 / Analog input 3

Pin	Name	Direction	Function
31	DIO2/AD2	Both	Digital I/O 2 / Analog input 2
32	DIO1/AD1	Both	Digital I/O 1 / Analog input 1
33	DIO0/AD0	Both	Digital I/O 0 / Analog input 0
34	[Reserved]	-	Do not connect
35	GND	-	Ground
36	RF	Both	RF connection
37	[Reserved]	-	Do not connect

Notes

Minimum connections: VCC, GND, DOUT and DIN.

Minimum connections for updating firmware: VCC, GND, DIN, DOUT, RTS and DTR.

The table specifies signal direction with respect to the device.

The device includes a 50 kΩ pull-up resistor attached to RESET.

Use the **PR** (Pull-up/Down Resistor Enable) command to configure several of the input pull-ups.

You can connect other pins to external circuitry for convenience of operation including the Associate LED pin (pin 15). The Associate LED flashes differently depending on the state of the device.

Leave any unused pins disconnected.

Design notes

The following guidelines help to ensure a robust design.

The XBee modules do not specifically require any external circuitry specific connections for proper operation. However, there are some general design guidelines that we recommend for help in troubleshooting and building a robust design.

Power supply design

A poor power supply can lead to poor device performance, especially if you do not keep the supply voltage within tolerance or if it is excessively noisy. To help reduce noise, place a 1.0 µF and 8.2 pF capacitor as near as possible to pin 1 on the PCB. If you are using a switching regulator for the power supply, switch the frequencies above 500 kHz. Limit the power supply ripple to a maximum 100 mV peak to peak.

Board layout

We design XBee devices to be self sufficient and have minimal sensitivity to nearby processors, crystals or other printed circuit board (PCB) components. Keep power and ground traces thicker than signal traces and make sure that they are able to comfortably support the maximum current specifications. There are no other special PCB design considerations to integrate XBee devices, with the exception of antennas.

Antenna performance

Antenna location is important for optimal performance. The following suggestions help you achieve optimal antenna performance. Point the antenna up vertically (upright). Antennas radiate and receive the best signal perpendicular to the direction they point, so a vertical antenna's omnidirectional radiation pattern is strongest across the horizon.

Position the antennas away from metal objects whenever possible. Metal objects between the transmitter and receiver can block the radiation path or reduce the transmission distance. Objects that are often overlooked include:

- metal poles
- metal studs
- structure beams
- concrete, which is usually reinforced with metal rods

If you place the device inside a metal enclosure, use an external antenna. Common objects that have metal enclosures include:

- vehicles
- elevators
- ventilation ducts
- refrigerators
- microwave ovens
- batteries
- tall electrolytic capacitors

Do not place XBee devices with the chip or integrated PCB antenna inside a metal enclosure.

Do not place any ground planes or metal objects above or below the antenna.

For the best results, mount the device at the edge of the host PCB. Ensure that the ground, power, and signal planes are vacant immediately below the antenna section.

Keepout area

We recommend that you allow a “keepout” area, which the following drawings show.

Through-hole keepout

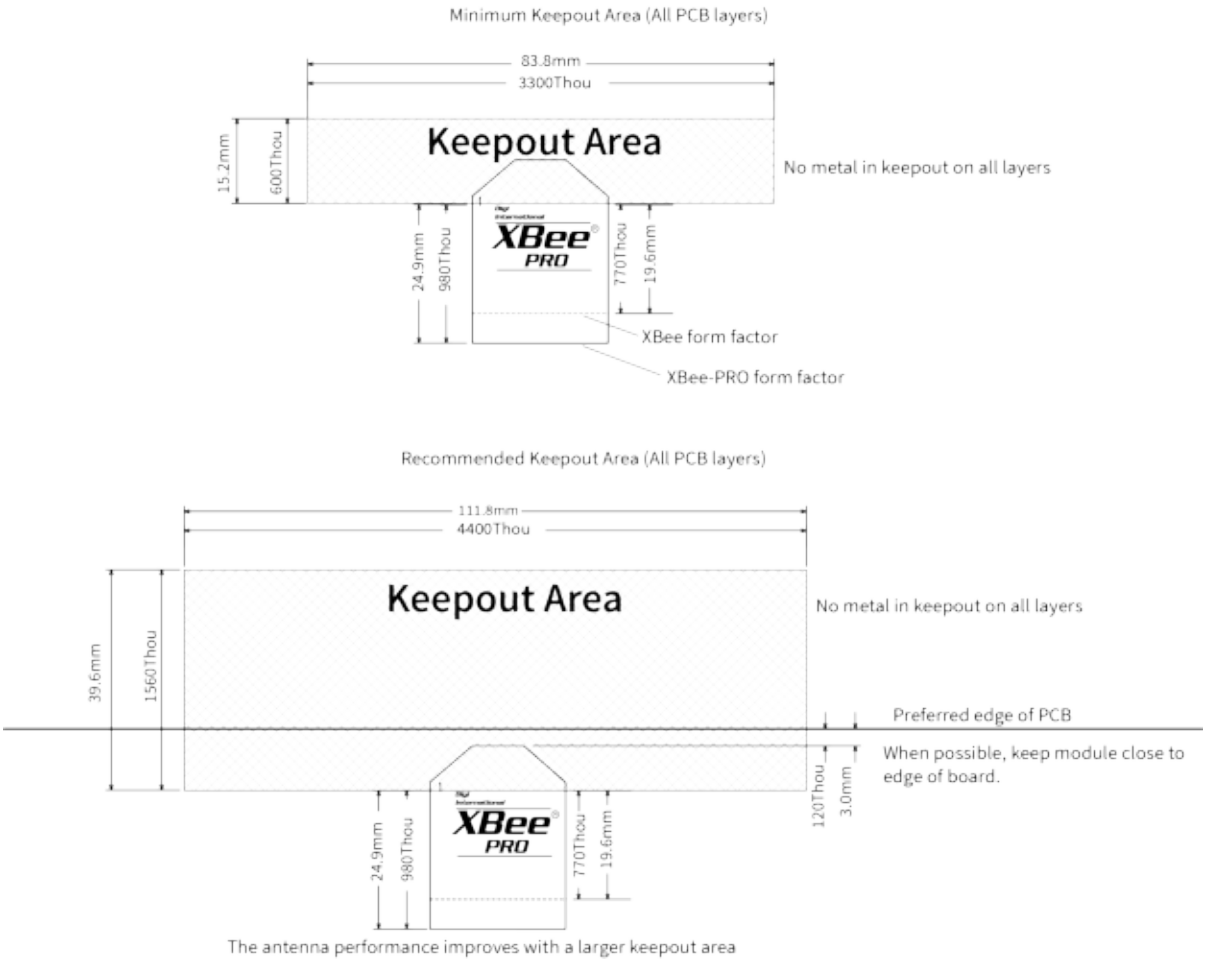

Notes

1. We recommend non-metal enclosures. For metal enclosures, use an external antenna.
2. Keep metal chassis or mounting structures in the keepout area at least 2.54 cm (1 in) from the antenna.
3. Maximize the distance between the antenna and metal objects that might be mounted in the keepout area.
4. These keepout area guidelines do not apply for wire whip antennas or external RF connectors. Wire whip antennas radiate best over the center of a ground plane.

Surface-mount keepout

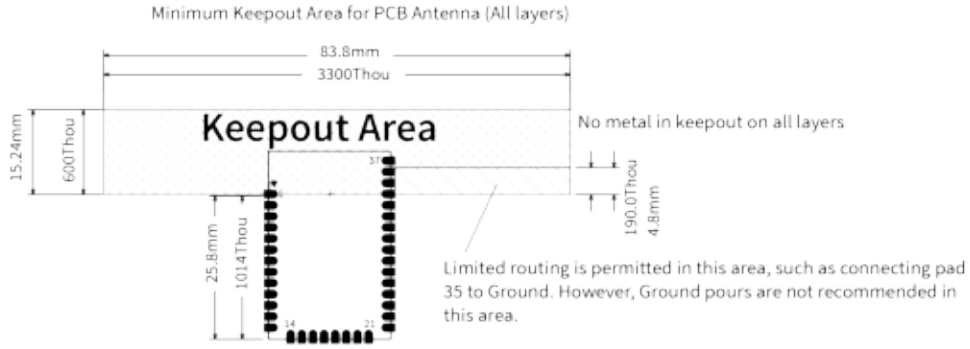

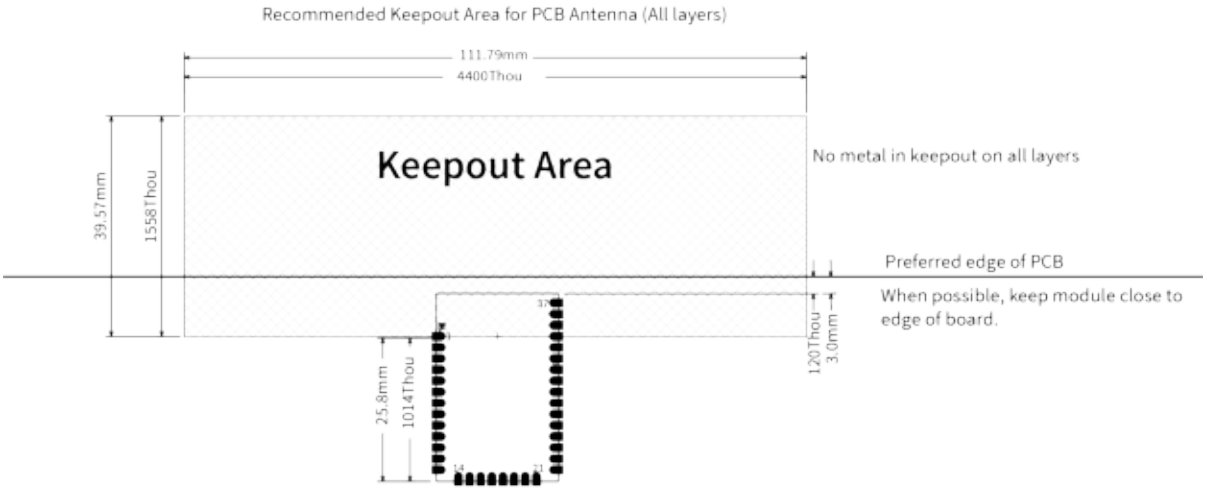

The antenna performance improves with a larger keepout area

RF pad version

The RF pad is a soldered antenna connection on the surface-mount device. The RF signal travels from pin 36 on the module to the antenna through a single ended RF transmission line on the PCB. This line should have a controlled impedance of 50 Ω.

For the transmission line, we recommend either a microstrip or coplanar waveguide trace on the PCB. We provide a microstrip example below, because it is simpler to design and generally requires less area on the host PCB than coplanar waveguide.

We do not recommend using a stripline RF trace because that requires routing the RF trace to an inner PCB layer, and via transitions can introduce matching and performance problems.

The following figure shows a layout example of a microstrip connecting an RF pad module to a through-hole RPSMA RF connector.

- The top two layers of the PCB have a controlled thickness dielectric material in between. The second layer has a ground plane which runs underneath the entire RF pad area. This ground plane is a distance *d*, the thickness of the dielectric, below the top layer.
- The top layer has an RF trace running from pin 36 of the device to the RF pin of the RPSMA connector. The RF trace's width determines the impedance of the transmission line with

relation to the ground plane. Many online tools can estimate this value, although you should consult the PCB manufacturer for the exact width. Assuming *d* = 0.025 in, and that the dielectric has a relative permittivity of 4.4, the width in this example will be approximately 0.045 in for a 50 Ω trace. This trace width is a good fit with the module footprint's 0.060 in pad width.

We do not recommend using a trace wider than the pad width, and using a very narrow trace can cause unwanted RF loss. You can minimize the length of the trace by placing the RPSMA jack close to the module. All of the grounds on the jack and the module are connected to the ground planes directly or through closely placed vias. Space any ground fill on the top layer at least twice the distance *d* (in this case, at least 0.050 in) from the microstrip to minimize their interaction.

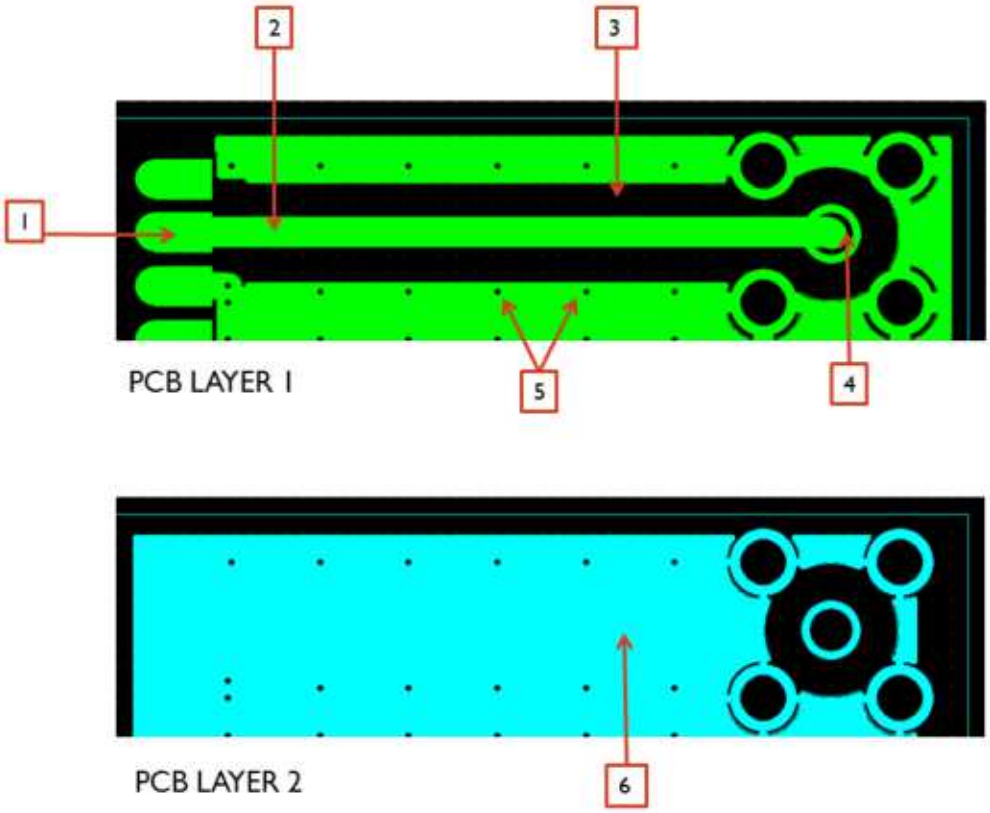

Number	Description
1	XBee surface-mount pin 36
2	50 Ω microstrip trace
3	Back off ground fill at least twice the distance between layers 1 and 2
4	RF connector
5	Stitch vias near the edges of the ground plane
6	Pour a solid ground plane under the RF trace on the reference layer

Implementing these design suggestions helps ensure that the RF pad device performs to specifications.

Configure the XBee/XBee-PRO S2C 802.15.4 RF Module

Software libraries 45
Configure the device using XCTU 45
Over-the-air (OTA) firmware update 45
XBee Network Assistant 45
XBee Multi Programmer 46

Software libraries

One way to communicate with the XBee/XBee-PRO S2C 802.15.4 RF Module is by using a software library. The libraries available for use with the XBee/XBee-PRO S2C 802.15.4 RF Module include:

- XBee Java library
- XBee Python library

The XBee Java Library is a Java API. The package includes the XBee library, its source code and a collection of samples that help you develop Java applications to communicate with your XBee devices.

The XBee Python Library is a Python API that dramatically reduces the time to market of XBee projects developed in Python and facilitates the development of these types of applications, making it an easy process.

Configure the device using XCTU

XBee Configuration and Test Utility (XCTU) is a multi-platform program that enables users to interact with Digi radio frequency (RF) devices through a graphical interface. The application includes built-in tools that make it easy to set up, configure, and test Digi RF devices.

For instructions on downloading and using XCTU, see the XCTU User Guide.

Click **Discover devices** and follow the instructions. XCTU should discover the connected XBee/XBee-PRO S2C 802.15.4 RF Modules using the provided settings.

Click **Add selected devices**. The devices appear in the **Radio Modules** list. You can click a module to view and configure its individual settings. For more information on these items, see AT commands.

Over-the-air (OTA) firmware update

The XBee/XBee-PRO S2C 802.15.4 RF Module supports OTA firmware updates using XCTU version 6.3.0 or higher. For instructions on performing an OTA firmware update with XCTU, see How to update the firmware of your modules in the XCTU User Guide.

OTA capability is only available when **MM** (Mac Mode) = 0 or 3

XBee Network Assistant

The XBee Network Assistant is an application designed to inspect and manage RF networks created by Digi XBee devices. Features include:

- Join and inspect any nearby XBee network to get detailed information about all the nodes it contains.
- Update the configuration of all the nodes of the network, specific groups, or single devices based on configuration profiles.
- Geo-locate your network devices or place them in custom maps and get information about the connections between them.
- Export the network you are inspecting and import it later to continue working or work offline.
- Use automatic application updates to keep you up to date with the latest version of the tool.

See the *XBee Network Assistant User Guide* for more information.

To install the XBee Network Assistant:

1. Navigate to digi.com/xbeenetworkassistant.
2. Click **General Diagnostics, Utilities and MIBs**.
3. Click the **XBee Network Assistant - Windows x86** link.
4. When the file finishes downloading, run the executable file and follow the steps in the XBee Network Assistant Setup Wizard.

XBee Multi Programmer

The XBee Multi Programmer is a combination of hardware and software that enables partners and distributors to program multiple Digi Radio frequency (RF) devices simultaneously. It provides a fast and easy way to prepare devices for distribution or large networks deployment.

The XBee Multi Programmer board is an enclosed hardware component that allows you to program up to six RF modules thanks to its six external XBee sockets. The XBee Multi Programmer application communicates with the boards and allows you to set up and execute programming sessions. Some of the features include:

- Each XBee Multi Programmer board allows you to program up to six devices simultaneously. Connect more boards to increase the programming concurrency.
- Different board variants cover all the XBee form factors to program almost any Digi RF device.

Download the XBee Multi Programmer application from: Digi XBee Multi Programmer

See the *XBee Multi Programmer User Guide* for more information.

Modes

Serial modes 48
Transceiver modes 51

Serial modes

The firmware operates in several different modes. Two top-level modes establish how the device communicates with other devices through its serial interface: Transparent operating mode and API operating mode. Use the **AP** command to choose Serial mode. XBee/XBee-PRO S2C 802.15.4 RF Modules use Transparent operation as the default serial mode.

The following modes describe how the serial port sends and receives data.

Transparent operating mode

Devices operate in this mode by default. The device acts as a serial line replacement when it is in Transparent operating mode. The device queues all UART data it receives through the DIN pin for RF transmission. When a device receives RF data, it sends the data out through the DOUT pin. You can set the configuration parameters using Command mode.

Note Transparent operating mode is not available when using the SPI interface; see SPI operation.

Serial-to-RF packetization

The device buffers data in the serial receive buffer until one of the following causes the data to be packetized and transmitted:

- The device receives no serial characters for the amount of time determined by RO (Packetization Timeout). If **RO** = **0**, packetization begins when a character is received.
- The device receives the Command Mode Sequence (**GT** + **CC** + **GT**). Any character buffered in the serial receive buffer before the sequence is transmitted.
- The device receives the maximum number of characters that fits in an RF packet (100 bytes).

Serial-to-RF packetization

Data is buffered in the DI buffer until one of the following causes the data to be packetized and transmitted:

1. No serial characters are received for the amount of time determined by the **RO** (Packetization Timeout) parameter. If **RO** = 0, packetization begins when a character is received.
2. The maximum number of characters that will fit in an RF packet (100) is received. The maximum payload depends on whether you use Compatibility mode or not. If you use it, the maximum payload is 100 characters, but if you do not use it, depending on encryption, the App header and addressing, the payload can be larger.
3. The Command Mode Sequence (**GT** + **CC** + **GT**) is received. Any character buffered in the DI buffer before the sequence is transmitted.

If the device cannot immediately transmit (for instance, if it is already receiving RF data), the serial data is stored in the DI Buffer. The data is packetized and sent at any **RO** timeout or when 100 bytes (maximum packet size without Compatibility mode) are received.

If the DI buffer becomes full, hardware flow control must be implemented in order to prevent overflow (loss of data between the host and device).

API operating mode

Application programming interface (API) operating mode is an alternative to Transparent mode. It is helpful in managing larger networks and is more appropriate for performing tasks such as collecting

data from multiple locations or controlling multiple devices remotely. API mode is a frame-based protocol that allows you to direct data on a packet basis. It can be particularly useful in large networks where you need control over the operation of the radio network or when you need to know which node a data packet is from. The device communicates UART or SPI data in packets, also known as API frames. This mode allows for structured communications with serial devices.

For more information, see API mode overview.

Command mode

Command mode is a state in which the firmware interprets incoming characters as commands. It allows you to modify the device's configuration using parameters you can set using AT commands. When you want to read or set any parameter of the XBee/XBee-PRO S2C 802.15.4 RF Module using this mode, you have to send an AT command. Every AT command starts with the letters **AT** followed by the two characters that identify the command and then by some optional configuration values.

The operating modes of the XBee/XBee-PRO S2C 802.15.4 RF Module are controlled by the AP (API Enable) setting, but Command mode is always available as a mode the device can enter while configured for any of the operating modes.

Command mode is available on the UART interface for all operating modes. You cannot use the SPI interface to enter Command mode.

Enter Command mode

To get a device to switch into Command mode, you must issue the following sequence: **+++** within one second. There must be at least one second preceding and following the **+++** sequence. Both the command character (**CC**) and the silence before and after the sequence (**GT**) are configurable. When the entrance criteria are met the device responds with **OK\r** on UART signifying that it has entered Command mode successfully and is ready to start processing AT commands.

If configured to operate in Transparent operating mode, when entering Command mode the XBee/XBee-PRO S2C 802.15.4 RF Module knows to stop sending data and start accepting commands locally.

Note Do not press **Return** or **Enter** after typing **+++** because it interrupts the guard time silence and prevents you from entering Command mode.

When the device is in Command mode, it listens for user input and is able to receive AT commands on the UART. If **CT** time (default is 10 seconds) passes without any user input, the device drops out of Command mode and returns to the previous operating mode. You can force the device to leave Command mode by sending CN (Exit Command mode).

You can customize the command character, the guard times and the timeout in the device's configuration settings. For more information, see CC (Command Character), CT (Command mode Timeout) and GT (Guard Times).

Troubleshooting

Failure to enter Command mode is often due to baud rate mismatch. Ensure that the baud rate of the connection matches the baud rate of the device. By default, BD (Interface Data Rate) = **3** (9600 b/s).

There are two alternative ways to enter Command mode:

- A serial break for six seconds enters Command mode. You can issue the "break" command from a serial console, it is often a button or menu item.

- Asserting DIN (serial break) upon power up or reset enters Command mode. XCTU guides you through a reset and automatically issues the break when needed.

Both of these methods temporarily set the device's baud rate to 9600 and return an **OK** on the UART to indicate that Command mode is active. When Command mode exits, the device returns to normal operation at the baud rate that **BD** is set to.

Send AT commands

Once the device enters Command mode, use the syntax in the following figure to send AT commands. Every AT command starts with the letters **AT**, which stands for "attention." The AT is followed by two characters that indicate which command is being issued, then by some optional configuration values.

To read a parameter value stored in the device's register, omit the parameter field.

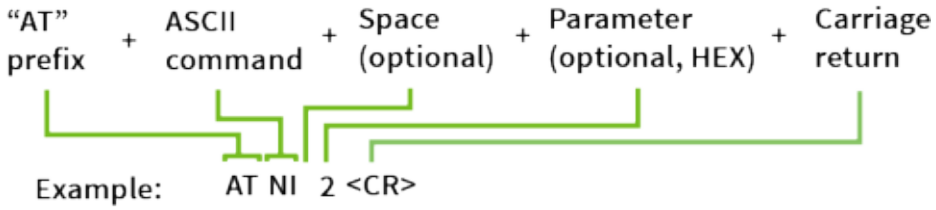

The preceding example changes NI (Node Identifier) to **My XBee**.

Multiple AT commands

You can send multiple AT commands at a time when they are separated by a comma in Command mode; for example, **ATNIMy XBee,AC<cr>**.

The preceding example changes the **NI (Node Identifier)** to **My XBee** and makes the setting active through AC (Apply Changes).

Parameter format

Refer to the list of AT commands for the format of individual AT command parameters. Valid formats for hexidecimal values include with or without a leading **0x** for example **FFFF** or **0xFFFF**.

Response to AT commands

When using AT commands to set parameters the XBee/XBee-PRO S2C 802.15.4 RF Module responds with **OK<cr>** if successful and **ERROR<cr>** if not.

Apply command changes

Any changes you make to the configuration command registers using AT commands do not take effect until you apply the changes. For example, if you send the **BD** command to change the baud rate, the actual baud rate does not change until you apply the changes. To apply changes:

1. Send AC (Apply Changes).
2. Send WR (Write).
   or:
3. Exit Command mode.

Make command changes permanent

Send a WR (Write) command to save the changes. **WR** writes parameter values to non-volatile memory so that parameter modifications persist through subsequent resets.

Send as RE (Restore Defaults) to wipe settings saved using **WR** back to their factory defaults.

Note You still have to use **WR** to save the changes enacted with **RE**.

Exit Command mode

1. Send CN (Exit Command mode) followed by a carriage return.
   or:
2. If the device does not receive any valid AT commands within the time specified by CT (Command mode Timeout), it returns to Transparent or API mode. The default Command mode timeout is 10 seconds.

For an example of programming the device using AT Commands and descriptions of each configurable parameter, see AT commands.

Transceiver modes

The following modes describe how the transceiver sends and receives over-the-air (OTA) data.

Idle mode

When not receiving or transmitting data, the device is in Idle mode. During Idle mode, the device listens for valid data on both the RF and serial ports.

Transmit mode

Transmit mode is the mode in which the device is transmitting data. This typically happens when data is received from the serial port.

Receive mode

This is the default mode for the XBee/XBee-PRO S2C 802.15.4 RF Module. The device is in Receive mode when it is not transmitting data. If a destination node receives a valid RF packet, the destination node transfers the data to its serial transmit buffer.

Operation

Addressing 53
Encryption 53
Maximum payload 55
Networking 57
Clear Channel Assessment (CCA) 63
Serial interface 64
SPI operation 67
I/O support 69
Sleep support 75
Node discovery 78
Remote configuration commands 80

Addressing

Every RF data packet sent over-the-air contains a Source Address and Destination Address field in its header. The XBee/XBee-PRO S2C 802.15.4 RF Module conforms to the 802.15.4 specification and supports both short 16-bit addresses and long 64-bit addresses. A unique 64-bit IEEE source address is assigned at the factory and can be read with the **SL** (Serial Number Low) and **SH** (Serial Number High) commands. You must manually configure short addressing. A device uses its unique 64-bit address as its Source Address if its **MY** (16-bit Source Address) value is 0xFFFF or 0xFFFE.

Send packets to a specific device

To send a packet to a specific device using 64-bit addressing:

- Set the Destination Address (**DL** + **DH**) of the sender to match the Source Address (**SL** + **SH**) of the intended destination device.

To send a packet to a specific device using 16-bit addressing:

1. Set the **DL** parameter to equal the **MY** parameter of the intended destination device.
2. Set the **DH** parameter to 0.

Addressing modes

802.15.4 frames have a source address, a destination address, and a destination PAN ID in the over-the-air (OTA) frame. The source and destination addresses may be either long or short and the destination address may be either a unicast or a broadcast. The destination PAN ID is short and it may also be the broadcast PAN ID.

In Transparent mode, the destination address is set by the **DH** and **DL** parameters, but, in API mode, it is set by the TX Request: 64-bit address (0x00) or TX Request: 16-bit Address (0x01) frames. In either Transparent mode or API mode, the destination PAN ID is set with the **ID** parameter, and the source address is set with the **MY** parameter.

Broadcasts and unicasts

Broadcasts are identified by the 16-bit short address of 0xFFFF. Any other destination address is considered a unicast and is a candidate for acknowledgments, if enabled.

Broadcast PAN ID

The Broadcast PAN ID is also 0xFFFF. Its effect is to traverse all PANs in the vicinity. Typically, this only makes sense during association time when sending beacon requests to find PAN IDs.

Short and long addresses

A short address is 16 bits and a long address is 64 bits. The short address is set with the **MY** parameter. If the short address is 0xFFFE or 0xFFFF, then the address of the device is long and it is the serial number of the device as read by the **SH** and **SL** parameters.

Note When an end device associates to a coordinator, it is assigned the short address of 0xFFFE.

Encryption

The XBee/XBee-PRO S2C 802.15.4 RF Module supports AES 128-bit encryption. 128-bit encryption refers to the length of the encryption key entered with the **KY** command (128 bits = 16 bytes). The

802.15.4 protocol specifies eight security modes, enumerated as shown in the following table.

Level	Name	Encrypted?	Length of message integrity check	Packet length overhead
0	N/A	No	0 (no check)	0
1	MIC-32	No	4	9
2	MIC-64	No	8	13
3	MIC-128	No	16	21
4	ENC	Yes	0 (no check)	5
5	ENC-MIC-32	Yes	4	9
6	ENC-MIC-64	Yes	8	13
7	ENC-MIC-128	Yes	16	21

The XBee/XBee-PRO S2C 802.15.4 RF Module only supports security levels 0 and 4. It does not support message integrity checks. **EE** 0 selects security level 0 and **EE** 1 selects security level 4. When using encryption, all devices in the network must use the same 16-byte encryption key for valid data to get through. Mismatched keys will corrupt the data output on the receiving device. Mismatched **EE** parameters will prevent the receiving device from outputting received data.

Working from a maximum packet size of 116 bytes, encryption affects the maximum payload as shown in the following table.

Factor	Effect on maximum payload	Comment
Compatibility mode	Force to 95	If **C8** bit 0 is set, all packets are limited to 95 bytes, regardless of other factors listed below. This is how the Legacy 802.15.4 module (S1 hardware) functions.
Packet overhead	Reduce by 5	This penalty for enabling encryption is unavoidable due to the 802.15.4 protocol.
Source address	Reduce by 6	This penalty is unavoidable because the 802.15.4 requires encrypted packets to be sent with a long source address, even if a short address would otherwise be used.
Destination address	Reduce by 6	This penalty only applies if sending to a long address rather than a short address.
App header	Reduce by 4	The app header for encryption is 4 bytes long. This penalty only applies if **MM** = 0 or 3.

Because of the two mandatory reductions when using encryption, no packet can exceed 116 - (5+6) =105 bytes. The other options may further reduce the maximum payload to 101 bytes, 99 bytes, or 95 bytes.

When operating in API mode and not using encryption, if the source address is long, the receiving device outputs an RX Indicator (0x80) frame for received data. But, if the source address is short, the

receiving device outputs a Receive Packet (0x81) frame for received data. These same rules apply for encryption if **MM** is 0 or 3. This is possible because the four-byte encryption App header includes the short address of the sender and the long received address is not used for API output. If encryption is enabled with **MM** of 1 or 2, then no App header exists, the source address is always long, and the receiving device in API mode always outputs a 64-bit Receive Packet - 0x80.

Maximum payload

There is a maximum payload that you can send at one time, depending on the device's configuration.

These maximums only apply in API mode. If you attempt to send an API packet with a larger payload than specified, the device responds with a Transmit Status frame (0x89) with the Status field set to 74 (Data payload too large).

In Transparent mode, the firmware splits the data as necessary to cope with maximum payloads.

Maximum payload rules

Note Refer to NP (Maximum Packet Payload Bytes) which can provide maximum packet size, it always assumes a long destination address. This means that if you select a short destination address, you will be able to send up to **NP** + 6 bytes in a single packet.

1. If you enable transmit compatibility with the Legacy 802.15.4 module (S1 hardware):
   - There is a fixed maximum payload of 100 bytes if not using encryption
   - There is a fixed maximum payload of 95 bytes if using encryption
   - The rest of the rules do not apply. They apply only when you disable transmit compatibility with the Legacy 802.15.4 module.
2. The maximum achievable payload is 116 bytes. This is achieved when:
   - Not using encryption.
   - Not using the application header.
   - Using the short source address.
   - Using the short destination address.
3. If you are using the application header—MM (MAC Mode) set to **0** or **3**—the maximum achievable payload is reduced by:
   - 2 bytes if not using encryption.
   - 4 bytes if using encryption.
4. If you are using the long source address, the maximum achievable payload is reduced by 6 bytes (size of long address (8) - size of short address (2) = 6).
5. If you are using encryption, the short source addresses are promoted to long source addresses, so the maximum achievable payload is reduced by 6 bytes.
6. If you are using the long destination address, the maximum achievable payload is reduced by 6 bytes (the difference between the 8 bytes required for a long address and the 2 bytes required for a short address).
7. if you are using encryption, the maximum achievable payload is reduced by 5 bytes.

Maximum payload summary tables

The following table indicates the maximum payload when using transmit compatibility with the Legacy 802.15.4 module (S1 hardware).

Encryption	
Enabled	**Disabled**
95 B	100 B

The following table indicates the maximum payload when using the application header and not using encryption. Increment the maximum payload in 2 bytes if you are not using the application header.

	Destination Address	
Source Address	Short	Long
Short	114 B	108 B
Long	108 B	102 B

The following table indicates the maximum payload when using the application header and using encryption. Increment the maximum payload in 4 bytes if you are not using the application header.

	Destination Address	
Source Address	Short	Long
Short	101 B	95 B
Long	101 B	95 B

Work with Legacy devices

The Legacy 802.15.4 module (S1 hardware) transmits packets one by one. It does not transmit a packet until it receives all expected acknowledgments of the previous packet or the timeout expires.

The new XBee/XBee-PRO S2C 802.15.4 RF Modules enhance transmission by implementing a transmission queue that allows the device to transmit to several devices at the same time. Broadcast transmissions are performed in parallel with the unicast transmissions.

This enhancement in the XBee/XBee-PRO S2C 802.15.4 RF Module can produce problematic behavior under certain conditions if the receiver is a Legacy 802.15.4 module (S1 hardware).

The conditions are:

- The sender is a XBee/XBee-PRO S2C 802.15.4 RF Module, and the receiver is a Legacy 802.15.4 module.
- The sender has the Digi Header enabled (**MM** = 0 or 3) and **RR** (XBee Retries) > 0.
- The sender sends broadcast and unicast messages at the same time to the Legacy 802.15.4 module without waiting for the transmission status of the previous packet.

The effect is:

- The receiver may display duplicate packets.

The solution is:

- Set bit 0 of the **C8** (802.15.4 Compatibility) parameter to 1 to enable TX compatibility mode in the XBee/XBee-PRO S2C 802.15.4 RF Module. This eliminates the transmission queue to avoid sending to multiple addresses simultaneously. It also limits the packet size to the levels of the Legacy 802.15.4 module.

Networking

The following table describes some common terms we use when discussing networks.

Term	Definition
Association	Establishing membership between end devices and a coordinator.
Coordinator	A full-function device (FFD) that provides network synchronization by polling nodes.
End device	When in the same network as a coordinator. Devices that rely on a coordinator for synchronization and can be put into states of sleep for low-power applications.
PAN	Personal Area Network. A data communication network that includes one or more end devices and optionally a coordinator.

MAC Mode configuration

Medium Access Control (MAC) Mode configures two functions:

1. Enables or disables the use of a Digi header in the 802.15.4 RF packet.
   When the Digi header is enabled (**MM** = 0 or 3), duplicate packet detection is enabled as well as certain AT commands.
   Modes 1 and 2 do not include a Digi header, which disables many features of the device. All data is strictly pass through.
2. Enables or disables MAC acknowledgment request for unicast packets.
   When MAC ACK is enabled (**MM** = 0 or 2), transmitting devices send packets with an ACK request so receiving devices send an ACK back (acknowledgment of RF packet reception) to the transmitter. If the transmitting device does not receive the ACK, it re-sends the packet up to three times or until the ACK is received.
   Modes 1 and 3 disable MAC acknowledgment. Transmitting devices send packets without an ACK request so receiving devices do not send an ACK back to the transmitter.
   Broadcast messages are always sent with the MAC ACK request disabled.

The following table summarizes the functionality.

Mode	Digi Header	MAC ACK
0 (default)	V	V
1		
2		V
3	V	

The default value for the **MM** configuration parameter is 0 which enables both the Digi header and the MAC acknowledgment.

XBee retries configuration

Configures the maximum number of retries the device executes in addition to the three retries provided by the 802.15.4 MAC. RR (XBee Retries) controls XBee retries configuration. It is also known as Application Retries.

For each XBee retry, the 802.15.4 MAC can execute up to three retries.

This only applies if MAC Mode configuration has Digi Header enabled.

Transmit status based on MAC mode and XBee retries configurations

When working in API mode, a transmit request frame sent by the user is always answered with a transmit status frame sent by the device, if the frame ID is non-zero.

The following tables report the expected transmit status for unicast transmissions and the maximum number of MAC and application retries the device attempts.

The tables also report the transmit status reported when the device detects energy above the CCA threshold (when a CCA failure happens).

The following table applies in either of these cases:

- Digi Header is disabled.
- Digi Header is enabled and XBee Retries (**RR** parameter) is equal to 0 (default configuration).

Mac ACK Config	Destination reachable			Destination unreachable			CCA failure happened		
	TX status	Retries		TX status	Retries		TX status	Retries	
		MAC	App		MAC	App		MAC	App
Enabled	00 (Success)	up to 3	0	01 (No acknowledgment received)	3	0	02 (CCA failure)	3	0
Disabled	00 (Success)	0	0	00 (Success)	0	0	02 (CCA failure)	3	0

The following table applies when:

- Digi Header is enabled and XBee Retries (**RR** parameter) is bigger than 0.

Mac ACK Config	Destination reachable			Destination unreachable			CCA failure happened		
	TX status	Retries		TX status	Retries		TX status	Retries	
		MAC	App		MAC	App		MAC	App
Enabled	00 (Success)	up to 3 per app	up to **RR** value	21 (Network ACK	3	**RR** value	02 (CCA failure)	3	**RR** value

Mac ACK Config	Destination reachable			Destination unreachable			CCA failure happened		
	TX status	Retries MAC	Retries App	TX status	Retries MAC	Retries App	TX status	Retries MAC	Retries App
		retry		Failure)					
Disabled	00 (Success)	0	up to **RR** value	21 (Network ACK Failure)	0	**RR** value	02 (CCA failure)	3	**RR** value

Peer-to-peer networks

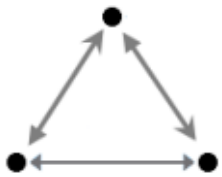

By default, XBee/XBee-PRO S2C 802.15.4 RF Module modules are configured to operate within a peer-to-peer network topology and therefore are not dependent upon master/slave relationships. This means that devices remain synchronized without the use of master/server configurations and each device in the network shares both roles of master and slave. Our peer-to-peer architecture features fast synchronization times and fast cold start times. This default configuration accommodates a wide range of RF data applications.

Master/slave networks

In a Master Slave network, there is a coordinator and one or more end devices. When end devices associate to the coordinator, they become members of that Personal Area Network (PAN). As such, they share the same channel and PAN ID. PAN IDs must be unique to prevent miscommunication between PANs. Depending on the **A1** and **A2** parameters, association may assist in automatically assigning the PAN ID and the channel. These parameters are specified below based on the network role (end device or coordinator).

End device association

End device association occurs if **CE** is **0** and **A1** has bit 2 set. See the following table.

Bit	Hex value	Meaning
0	0x01	Allow PAN ID reassignment
1	0x02	Allow channel reassignment
2	0x04	Auto association
3	0x08	Poll coordinator on pin wake

By default, **A1** is 0, which disables association and effectively causes an end device to operate in peer-to-peer mode. When bit 2 is set, the end device associates to a coordinator. This is done by sending

out an active scan to detect beacons from nearby networks. The active scan selects one channel and transmits a Beacon Request command to the broadcast address and the broadcast PAN ID. It then listens on that channel for beacons from any coordinator operating on that channel. The listen time on each channel is determined by the **SD** parameter. Once that time expires, the active scan selects the next channel, repeating until all channels have been scanned.

If **A1** is 0x04 (bit 0 clear, bit 1 clear, and bit 2 set), then the active scan will reject all beacons that do not match both the configured PAN ID and the configured channel. This is the best way to join a particular coordinator.

If **A1** is 0x05 (bit 0 set, bit 1 clear, and bit 2 set), then the active scan will accept a beacon from any PAN ID, providing the channel matches. This is useful if the channel is known, but not the PAN ID.

If **A1** is 0x06 (bit 0 clear, bit 1 set, and bit 2 set), then the active scan will accept a beacon from any channel, providing the PAN ID matches. This is useful if the PAN ID is known, but not the channel.

If **A1** is 0x07 (bit 0 set, bit 1 set, and bit 2 set), then the active scan will accept a beacon from any PAN ID and from any channel. This is useful when the network does not matter, but the one with the best signal is desired.

Whenever multiple beacons are received that meet the criteria of the active scan, then the beacon with the best link quality is selected. This applies whether **A1** is 0x04, 0x05, 0x06, or 0x07.

Before the End Device joins a network, the Associate LED will be on solid. After it joins a network, the Associate LED will blink twice per second.

In the event that association parameters are changed after the end device is associated, the end device will leave the network and re-join in accordance with the new configuration parameters.

Coordinator association

Coordinator association occurs if **CE** is 1 and **A2** has bit 2 set. See the following table.

Bit	Hex value	Meaning
0	0x01	Allow PAN ID reassignment
1	0x02	Allow channel reassignment
2	0x04	Allow association

By default, **A2** is 0, which prevents devices from associating to the coordinator. So, if **CE** is 1 and **A2** bit 2 is 0, the device still creates a network, but end devices are unable to associate to it.

If **A2** bit 2 is set, then joining is allowed after the coordinator forms a network.

If **A2** bit 0 is set, the coordinator issues an active scan. This means it will send out beacon requests to the broadcast address (0xFFFF) and the broadcast PAN ID (0xFFFF). Then, it will listen for beacons. The listen time is determined by the **SD** parameter. Then the same beacon request is sent out on the next channel and the device listens for beacon responses on that channel. This process repeats until each channel in the channel mask (**SC**) is scanned for **SD** time. If none of the beacons on any of the channels return a PAN ID equivalent with the **ID** parameter, then the coordinator will use the ID parameter for the PAN ID of the new network it forms. But, if a beacon response matches the PAN ID of the coordinator, the coordinator will form a PAN on a unique PAN ID.

If **A2** bit 0 is clear, then the coordinator will form a network on the PAN ID identified by the **ID** parameter, without regard to another network that might have the same PAN ID.

If **A2** bit 1 is set, the coordinator will issue an energy scan, similar to the active scan. It will listen on each channel specified in the **SC** parameter for the time indicated by the **SD** parameter. After the scan is complete, the channel with the least energy is selected to form the new network.

If **A2** bit 1 is clear, then no energy scan is performed and the **CH** parameter is used to select the channel of the new network.

If bits 0 and 1 of **A2** are both set, then an active scan is done followed by an energy scan. However, the channels on which the active scan finds a coordinator are eliminated as possible channels for the energy scan, unless such an action would eliminate all channels. If beacons are found on all channels in the channel mask, then then the energy scan behaves the same as it would if beacons are not found on any of those channels. Therefore, the active scan will be performed on all channels in the channel mask. Then, an energy scan will be performed on the channels in the channel mask that did not find a coordinator.

Depending on the result of the active scan, the set of channels for the energy scan varies. If a PAN ID is found on all the channels in the channel mask, then the energy scan operates on all the channels in the channel mask. If at least one of the channels in the channel mask did not find a PAN ID, then the channels with PAN IDs are eliminated from consideration for the energy scan. After the energy scan completes, the channel with the least energy is selected for forming the new network.

Whenever **CE**, **ID**, **A2**, or **MY** changes, the network will leave and association will recur with the new parameters. Any end devices associated to the coordinator prior to changing one of these parameters will lose association. For this reason, it is important not to change these parameters on a coordinator unless needed.

Before the Coordinator forms a network, the Associate LED will be on solid. After it forms a network, the Associate LED will blink once per second.

Indirect addressing

The XBee/XBee-PRO S2C 802.15.4 RF Module may hold indirect messages until it runs out of buffers and the size of those messages does not matter. A brief summary follows:

A coordinator (**CE** = 1) must have **SP** set to a non-zero value to use indirect addressing. Otherwise, all frames will be sent directly, assuming the target device is awake. For best operation, **SP** and **ST** should be set to match the **SP** and **ST** values of the end nodes. The coordinator will hold onto an indirect message until it receives a poll from the device to which the message is addressed, or until a timeout, whichever occurs first. The timeout is 2.5 times the value of **SP**.

After an indirect message is sent, subsequent messages to the same address will be sent directly for a period of time equal to the **ST** parameter. The assumption is that the end device will remain awake for **ST** time after the last transmission or reception. Therefore, after a poll, every transmission and reception involving that address restart the **ST** timer. After the **ST** timer expires, the coordinator will again use indirect messaging (i.e it will hold messages awaiting a poll.)

End devices using cyclic sleep send a poll to the coordinator when they wake up unless **SO** bit 0 is set. End devices using pin sleep may be configured to send a poll on a pin wakeup by setting bit 3 of **A1**. Also the **FP** command can be used to send a poll upon exiting command mode. However, the poll is not sent while in command mode. Rather the poll is sent after changes are applied so that the module is ready to receive data after the poll is sent.

It is more difficult to use indirect addressing with pin sleep than with cyclic sleep because the end device must wake up periodically to poll for the data from the coordinator. Otherwise, the coordinator will discard the data. Therefore, cyclic sleep is the only recommended sleep mode for indirect addressing.

Association indicators

There are two types of association indicators: Asynchronous device status messages, and on demand queries. Asynchronous device status messages occur whenever a change occurs and API mode is enabled. On demand queries occur when the **AI** command is issued, which can occur in Command mode, in API mode, or as a remote command.

Device Status Messages

Not all device status messages are related with association, but for completeness all device status types reported by XBee/XBee-PRO S2C 802.15.4 RF Module are listed in the following table.

Type	Meaning
0x00	Hardware reset.
0x01	Watchdog reset.
0x02	End device successfully associated with a coordinator.
0x03	End device disassociated from coordinator or coordinator failed to form a new network.
0x06	Coordinator formed a new network.
0x0D	Input voltage on the XBee-PRO device is too high, which prevents transmissions.

Association indicator status codes

The XBee/XBee-PRO S2C 802.15.4 RF Module code can potentially give any of the status codes in the following table.

Code	Meaning
0x00	Coordinator successfully started, End device successfully associated, or operating in peer to peer mode where no association is needed.
0x03	Active Scan found a PAN coordinator, but it is not currently accepting associations.
0x04	Active Scan found a PAN coordinator in a beacon-enabled network, which is not a supported feature.
0x05	Active Scan found a PAN, but the PAN ID does not match the configured PAN ID on the requesting end device and bit 0 of **A1** is not set to allow reassignment of PAN ID.
0x06	Active Scan found a PAN on a channel does not match the configured channel on the requesting end device and bit 1 of **A1** is not set to allow reassignment of the channel.
0x0C	Association request failed to get a response.
0x13	End device is disassociated or is in the process of disassociating.
0xFF	Initialization time; no association status has been determined yet.

Sleep

Sleep is implemented to support installations where a mains power source is not available and a battery is required. In order to increase battery life, the device sleeps, which means it stops operating. It can be woken by a timer expiration or a pin.

For more information about sleep modes, see Sleep modes.

Sleep conditions

Since instructions stop executing while the device is sleeping, it is important to avoid sleeping when the device has work to do. For example, the device will not sleep if any of the following are true:

1. The device is operating in command mode, or in the process of getting into command mode with the +++ sequence.
2. The device is processing AT commands from API mode
3. The device is processing remote AT commands
4. Something is queued to the serial port and that data is not blocked by $\overline{\text{RTS}}$ flow control

If each of the above conditions are false, then sleep may still be blocked in these cases:

1. Enough time has not expired since the device has awakened.
   a. If the device is operating in pin sleep, the amount of time needed for one character to be received on the UART is enough time.
   b. If the device is operating in cyclic sleep, enough time is defined by a timer. The duration of that timer is:
      i. defined by **ST** if in **SM** 5 mode and it is awakened by a pin
      ii. 30 ms to allow enough time for a poll and a poll response
      iii. 750 ms to allow enough time for association, in case that needs to happen
   c. In addition, the wake time is extended by an additional **ST** time when new OTA data or serial data is received.
2. Sleep Request pin is not asserted when operating in pin sleep mode
3. Data is waiting to be sent OTA.

Clear Channel Assessment (CCA)

Prior to transmitting a packet, the device performs a CCA (Clear Channel Assessment) on the channel to determine if the channel is available for transmission. The detected energy on the channel is compared with the **CA** (Clear Channel Assessment) parameter value. If the detected energy exceeds the **CA** parameter value, the device does not transmit the packet.

Also, the device inserts a delay before a transmission takes place. You can set this delay using the **RN** (Backoff Exponent) parameter. If you set **RN** to 0, then there is no delay before the first CCA is performed. The RN parameter value is the equivalent of the “minBE” parameter in the 802.15.4 specification. The transmit sequence follows the 802.15.4 specification.

By default, the **MM** (MAC Mode) parameter = 0. On a CCA failure, the device attempts to re-send the packet up to two additional times.

When in Unicast packets with **RR** (Retries) = 0, the device executes two CCA retries. Broadcast packets always get two CCA retries.

Note Customers in Europe who have the XBee 802.15.4 module must manage their CCA settings. See CA (CCA Threshold) for **CA** values.

CCA operations

CCA is a method of collision avoidance that is implemented by detecting the energy level on the transmission channel before starting the transmission. The CCA threshold (defined by the **CA** parameter) defines the energy level that it takes to block a transmission attempt. For example, if CCA is set to the default value of 0x2C (which is interpreted as -44 dBm) then energy detected above the -44 dBm level (for example -40 dBm) temporarily blocks a transmission attempt. But if the energy level is less than that (for example -50 dBm), the transmission is not blocked. The intent of this feature is to prevent simultaneous transmissions on the same channel.

CCA can be set down to 0x50 (or -80 dBm), which approaches the sensitivity level. Setting such a threshold may not work in a noisy environment.

In the event that the energy level exceeds the threshold, the transmission is blocked some random number of backoff periods. The number of backoff periods is defined by random(2^n - 1) where the initial value of n is defined by the **RN** parameter and it increments after each failure. When **RN** is set to its default value of 0, then 2^n -1 is 0, preventing any delay before the first energy detection on a new frame. However, n increments after each CCA failure, giving a greater range for the number of backoff periods between each energy detection cycle.

In the event that five energy detection cycles occur and each one detects too much energy, the application tries again 1 to 48 ms later. After the application retries are exhausted, then the transmission fails with a CCA error.

Whenever the MAC code reports a CCA failure, meaning that it performed five energy detection cycles with exponential random back-offs, and each one failed, the **EC** parameter is incremented. The EC parameter can be read at any time to find out how noisy the operating channel is. It continues to increment until it reaches its maximum value of 0xFFFF. To get new statistics, you can always set **EC** back to 0.

Serial interface

The XBee/XBee-PRO S2C 802.15.4 RF Module interfaces to a host device through a serial port. The device can communicate through its serial port with:

- Through logic and voltage compatible universal asynchronous receiver/transmitter (UART).
- Through a level translator to any serial device, for example, through an RS-232 or USB interface board.
- Through a SPI, as described in SPI signals.

Select a serial port

The device has two serial ports and only one is active at a time. To be active, a port must be enabled and in use.

The UART is always enabled. The SPI is enabled if it is configured. To be configured, SPI_MISO, SPI_MOSI, SPI_SSEL , and SPI_CLK must all be configured as peripherals. On the surface-mount device, these lines are configured as peripherals by setting P5, P6, P7, and P8 to 1. This is also the default configuration for surface-mount devices.

On the through-hole device, those pins are not available and SPI is disabled by default. Therefore, to configure the SPI pins on a through-hole device, hold DOUT low during a reset. If the UART is not hooked up, then DOUT can be treated as an input to force the device into SPI mode. It is best to follow this special operation by a **WR** operation so that the SPI port will still be enabled on future resets without forcing DOUT low.

Once the SPI port is enabled by either means, it is still not active until the external SPI master asserts SPI_SSEL low. After the SPI port is active, the device continues to use the SPI port until the next reset.

Serial receive buffer

When serial data enters the device through the DIN pin (or the MOSI pin), it stores the data in the serial receive buffer until the device can process it. Under certain conditions, the device may not be able to process data in the serial receive buffer immediately. If large amounts of serial data are sent to the device such that the serial receive buffer would overflow, then it discards new data. If the UART is in use, you can avoid this by the host side honoring CTS flow control.

Serial transmit buffer

When the device receives RF data, it moves the data into the serial transmit buffer and sends it out the UART or SPI port. If the serial transmit buffer becomes full and the system buffers are also full, then it drops the entire RF data packet. Whenever the device receives data faster than it can process and transmit the data out the serial port, there is a potential of dropping data.

UART data flow

Devices that have a UART interface connect directly to the pins of the XBee/XBee-PRO S2C 802.15.4 RF Module as shown in the following figure. The figure shows system data flow in a UART-interfaced environment. Low-asserted signals have a horizontal line over the signal name.

Serial data

A device sends data to the XBee/XBee-PRO S2C 802.15.4 RF Module's UART through TH pin 3/SMT pin 4 DIN as an asynchronous serial signal. When the device is not transmitting data, the signals should idle high.

For serial communication to occur, you must configure the UART of both devices (the microcontroller and the XBee/XBee-PRO S2C 802.15.4 RF Module) with compatible settings for the baud rate, parity, start bits, stop bits, and data bits.

Each data byte consists of a start bit (low), 8 data bits (least significant bit first) and a stop bit (high). The following diagram illustrates the serial bit pattern of data passing through the device. The diagram shows UART data packet 0x1F (decimal number 31) as transmitted through the device.

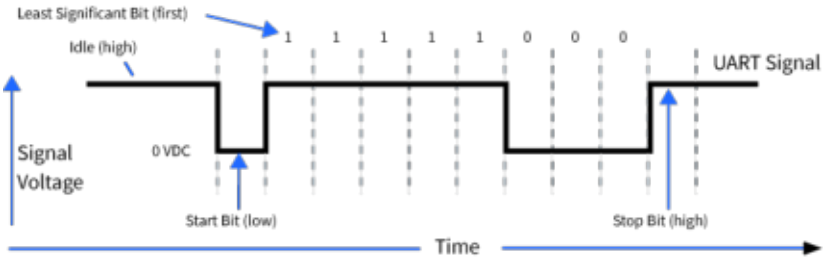

Flow control

The XBee/XBee-PRO S2C 802.15.4 RF Module maintains buffers to collect serial and RF data that it receives. The serial receive buffer collects incoming serial characters and holds them until the device can process them. The serial transmit buffer collects the data it receives via the RF link until it

transmits that data out the serial port. The following figure shows the process of device buffers collecting received serial data.

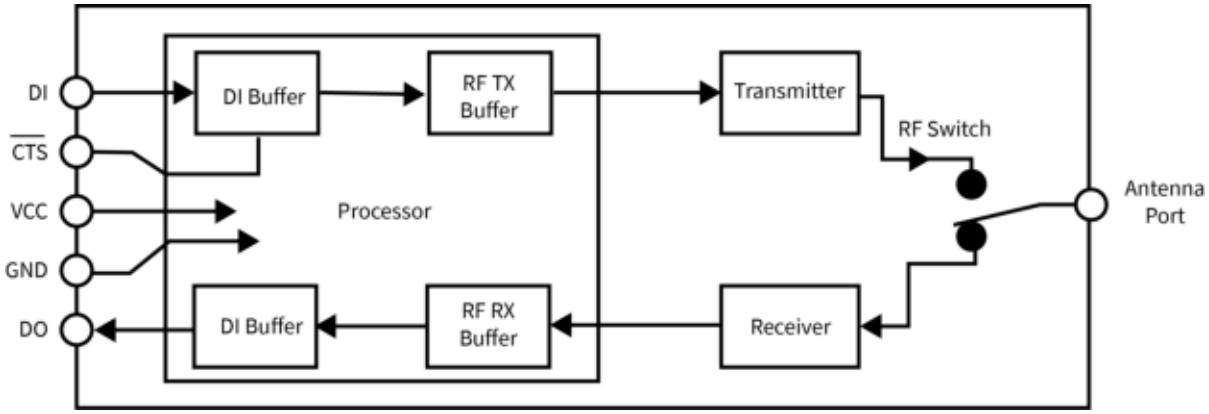

CTS flow control

If you enable CTS flow control (by setting **D7** to 1), when the serial receive buffer is 17 bytes away from being full, the device de-asserts CTS (sets it high) to signal to the host device to stop sending serial data. The device reasserts CTS after the serial receive buffer has 34 bytes of space. The maximum space available for receiving serial data is 174 bytes, which is enough to hold 1.5 full packets of data.

Flow control threshold

Use the **FT** parameter to set the flow control threshold. Since the receive serial buffer is 174 bytes, you cannot set **FT** to more than 174-12 = 162 bytes. This allows up to 17 bytes of data to come in after CTS is de-asserted before data is dropped. The default value of **FT** is 109, leaving space for an external device that responds slowly to CTS being de-asserted. The minimum value of **FT** is 17, which is the minimal operational level.

RTS flow control

If you send the **D6** command to enable RTS flow control, the device does not send data in the serial transmit buffer out the DOUT pin as long as RTS is de-asserted (set high). Do not de-assert RTS for long periods of time or the serial transmit buffer will fill. If the device receives an RF data packet and the serial transmit buffer does not have enough space for all of the data bytes, it discards the entire RF data packet.

If the device sends data out the UART when RTS is de-asserted (set high) the device could send up to five characters out the UART port after RTS is de-asserted.

Cases in which the DO buffer may become full, resulting in dropped RF packets:

1. If the RF data rate is set higher than the interface data rate of the device, the device may receive data faster than it can send the data to the host. Even occasional transmissions from a large number of devices can quickly accumulate and overflow the transmit buffer.
2. If the host does not allow the device to transmit data out from the serial transmit buffer due to being held off by hardware flow control.

Asynchronous Parameters

Asynchronous communication over a UART is configured with a start bit, data bits, parity, stop bits, and baud rate. Out of these, only parity and baud rate are configurable on the device for 802.15.4. This

means that the connecting micro-controller must match the the start bits (1), the data bits (8), and the stop bits (1) of the device for proper communication.

Parity

Use the **NB** command to configure parity; see NB (Parity).

SPI operation

This section specifies how SPI is implemented on the device, what the SPI signals are, and how full duplex operations work.

SPI signals

The XBee/XBee-PRO S2C 802.15.4 RF Module supports SPI communications in slave mode. Slave mode receives the clock signal and data from the master and returns data to the master. The SPI port uses the following signals on the device:

Signal	SMT pin #	SMT applicable AT command	TH Pin #	TH applicable AT command
SPI_MOSI (Master out, Slave in)	16	**P6**	11	**D4**
SPI_MISO (Master in, Slave out)	17	**P5**	4	**P2**
SPI_SCLK (Serial clock)	14	**P8**	18	**D2**
SPI_$\overline{\text{SSEL}}$ (Slave select)	15	**P7**	17	**D3**
SPI_$\overline{\text{ATTN}}$ (Attention)	12	**P9**	19	**D1**

By default, the inputs have pull-up resistors enabled. Use the **PR** command to disable the pull-up resistors. When the SPI pins are not connected but the pins are configured for SPI operation, then the device requires the pull-ups for proper UART operation.

Signal description

SPI_MISO: When SPI_CLK is active, the device outputs the data on SPI_MISO at the SPI_CLK rate. If there are other SPI slave devices connected to the same SPI master, then the SPI_MISO output from XBee device must be externally tri-stated when SPI_SSEL is de-asserted to prevent multiple devices from driving SPI_MISO.

SPI_MOSI: The SPI master outputs data on this line at the SPI_CLK rate after it selects the desired slave. When you configure the device for SPI operations, this pin is an input.

SPI_SCLK: The SPI master outputs a clock on this pin, and the rate must not exceed the maximum allowed, 5 Mb/s. This signal clocks data transfers on MOSI and MISO.

SPI_$\overline{\text{SSEL}}$: The SPI master outputs a low signal on this pin to select the device as an SPI slave. When you configure the device for SPI operations, this pin is an input. This signal enables serial communication with the slave.

SPI_$\overline{\text{ATTN}}$: The device asserts this pin low when it has data to send to the SPI master. When you configure this pin for SPI operations, it is an output (not tri-stated). This signal alerts the master that the slave has data queued to send. The device asserts this pin as soon as data is available to send to the SPI master and it remains asserted until the SPI master has clocked out all available data.

SPI parameters

Most host processors with SPI hardware allow you to set the bit order, clock phase and polarity. For communication with all XBee/XBee-PRO S2C 802.15.4 RF Modules, the host processor must set these options as follows:

- Bit order: send MSB first
- Clock phase (CPHA): sample data on first (leading) edge
- Clock polarity (CPOL): first (leading) edge rises

All XBee/XBee-PRO S2C 802.15.4 RF Modules use SPI mode 0 and MSB first. Mode 0 means that data is sampled on the leading edge and that the leading edge rises. MSB first means that bit 7 is the first bit of a byte sent over the interface.

SPI and API mode

The SPI only operates in API mode 1. The SPI does not support Transparent mode or API mode 2 (with escaped characters). This means that the **AP** configuration only applies to the UART interface and is ignored while using the SPI.

Full duplex operation

When using SPI on the XBee/XBee-PRO S2C 802.15.4 RF Module the device uses API operation without escaped characters to packetize data. The device ignores the configuration of **AP** because SPI does not operate in any other mode. SPI is a full duplex protocol, even when data is only available in one direction. This means that whenever a device receives data, it also transmits, and that data is normally invalid. Likewise, whenever a device transmits data, invalid data is probably received. To determine whether or not received data is invalid, the firmware places the data in API packets.

SPI allows for valid data from the slave to begin before, at the same time, or after valid data begins from the master. When the master sends data to the slave and the slave has valid data to send in the middle of receiving data from the master, a full duplex operation occurs, where data is valid in both directions for a period of time. Not only must the master and the slave both be able to keep up with the full duplex operation, but both sides must honor the protocol.

The following figure illustrates the SPI interface while valid data is being sent in both directions.

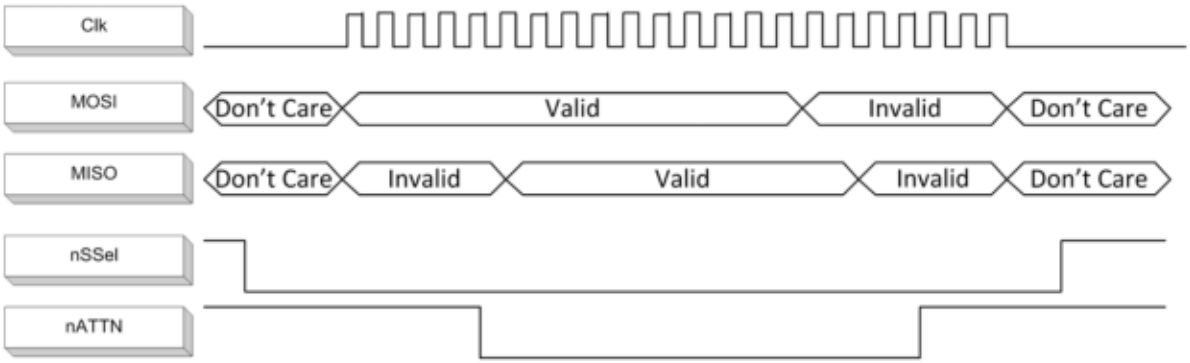

Slave mode characteristics

In slave mode, the following apply:

- SPI Clock rates up to 5 MHz (5 Mb/s) are possible.
- Data is MSB first.
- It uses Frame Format Mode 0. This means CPOL= 0 (idle clock is low) and CPHA = 0 (data is sampled on the clock's leading edge). The picture below diagrams Mode 0.
- The SPI port is setup for API mode and is equivalent to **AP** = 1.

The following picture shows the frame format for SPI communications.

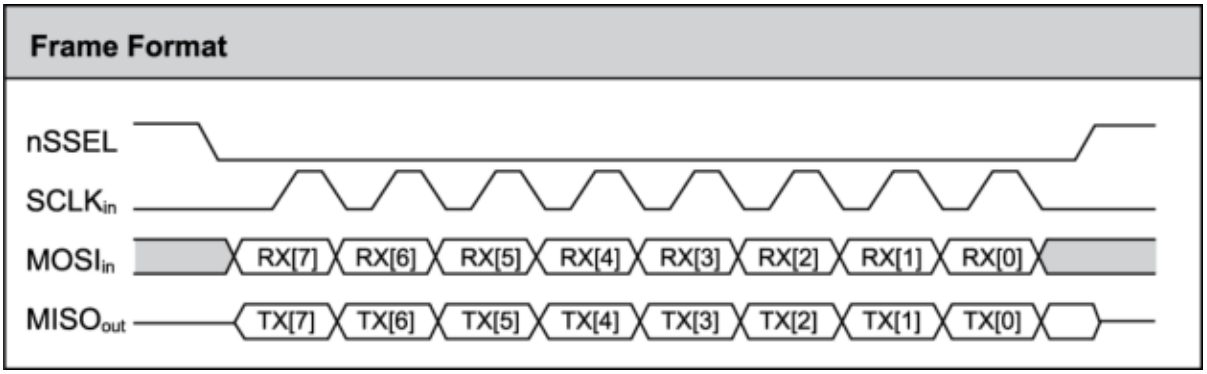

I/O support

The following topics describe analog and digital I/O line support, line passing and output control.

Digital I/O line support

Digital I/O is available on pins D0 through D8. Each of these pins may be configured as 3, 4, or 5 with the following meanings:

- 3 is digital input
- 4 is digital output low
- 5 is digital output high

Pins D0 through D8 are available for digital input, but only D0 through D7 are available for digital output.

Function	SMT pin	TH pin	AT command
DIO0	33	20	D0 (DIO0/AD0)
DIO1	32	19	D1 (DIO1/AD1)
DIO2	31	18	D2 (DIO2/AD2)
DIO3	30	17	D3 (DIO3/AD3)
DIO4	24	11	D4 (DIO4)
DIO5	28	15	D5 (DIO5/ASSOCIATED_INDICATOR)
DIO6	29	16	D6 (DIO6/RTS)
DIO7	25	12	D7 (DIO7/CTS)
DIO8	10	9	D8 (DIO8/SLEEP_REQUEST)

Analog input

Analog input is available on D0 through D3 by configuring these parameters to 2. Analog input is not available on D4 and D5.

On demand I/O sampling

You can use the **IS** (Force Sample) command to sample pins configured as digital I/O and analog input. If no pins are configured in this manner (with the **DO** - **D8** commands set to 2, 3, 4, or 5), then the **IS** command returns an error.

In Command mode, the output is:

Output	Description
01	Indicates one sample. That is the only possibility for Command mode.
20E	Mask to indicate which lines are sampled (A0, D3, D2, and D1).
00A	Digital sample indicates D3 high, D2 low, and D1 high.
3FF	Analog sample for A0 indicates that A0 is reading maximum voltage of 1.2 V.

In API mode, the output is:

7E 00 0C 83 00 00 00 00 01 03 3E 01 2A 02 10 FD

In this example, note the following:

83 indicates RX Packet: 16-bit Address I/O frame (0x83).

00 00 indicates 16-bit source address.

00 indicates RSSI (does not apply).

00 indicates options.

01 indicates the number of samples.

03 3E mask to indicate which lines are sampled (A0, D8, D5, D4, D3, D2, and D1).

01 2A digital sample that indicates that D8 is high, D5 is high, D4 is low, D3 is high, D2 is low, and D1 is high.

02 10 indicates that A0 has input voltage nearly half of capacity, where 03 FF would indicate the full voltage of 1.2 V = 1200 mV.

For a remote **IS** command sent to the device listed above with the same configuration, the output is:

7E 00 16 97 01 00 13 A2 00 40 E3 C0 15 00 00 49 53 00 01 03 3E 01 2A 02 10 9F

In this example, note the following:

97 indicates Remote AT Command Response frame (0x97).

01 is the frame ID.

00 13 A2 00 40 E3 C0 15 is the 64-bit source address.

00 00 indicates 16-bit source address.

49 53 (IS) indicates command response to the **IS** command.

00 indicates the status is OK.

01 indicates the number of samples.

03 3E mask to indicate which lines are sampled (A0, D8, D5, D4, D3, D2, and D1).

01 2A digital sample that indicates that D8 is high, D5 is high, D4 is low, D3 is high, D2 is low, and D1 is high.

02 10 indicates that A0 has input voltage about half of capacity, where 03 FF would indicate full voltage of 1.2 V = 1200 mV.

I/O data format

I/O data begins with a header. The first byte of the header defines the number of samples forthcoming. The last two bytes of the header (Channel Indicator) define which inputs are active. Each bit represents either a DIO line or ADC channel. The following figure illustrates the bits in the header.

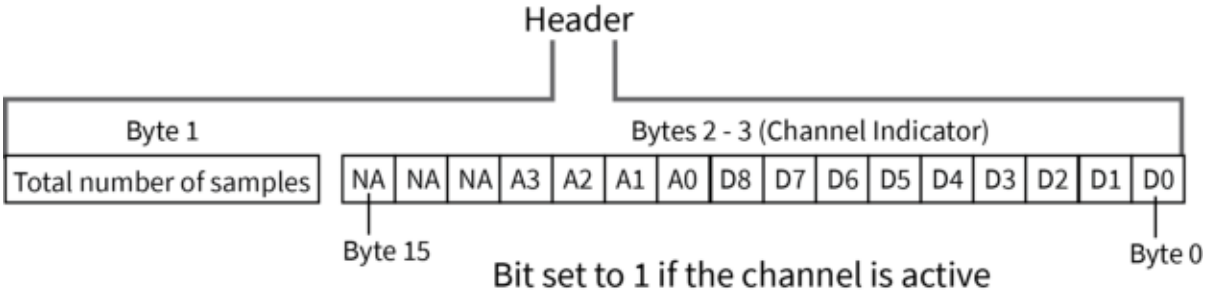

Sample data follows the header and the channel indicator frame determines how to read the sample data. If any of the DIO lines are enabled, the first two bytes are the DIO sample. The ADC data follows. ADC channel data is represented as an unsigned 10-bit value right-justified on a 16- bit boundary. The following figure illustrates the sample data bits.

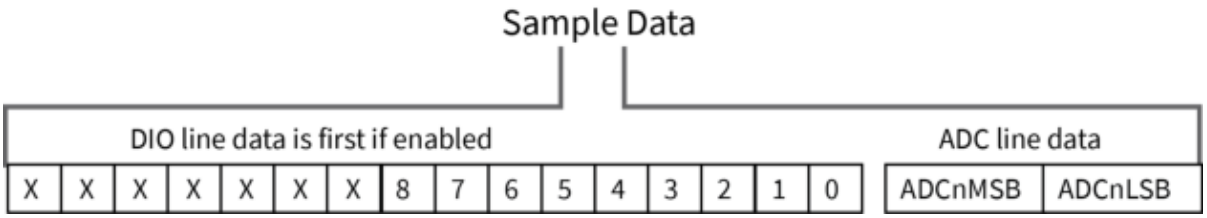

Multiple samples per packet

The **IT** parameter specifies how many I/O samples can be transmitted in a single OTA packet. Any single-byte value (0 - 0xFF) is accepted for input. However, the value is adjusted downward based on how many I/O samples can fit into a maximum size packet; see Maximum payload. A query of the **IT** parameter after changes are applied tells how many I/O samples actually occur.

Since **MM** must be 0 or 3 to send I/O samples, the maximum payload in the best of conditions (short source address, short destination address, and no encryption) is 114 bytes. Seven of those bytes are used by the command header and the I/O header, leaving 107 bytes for I/O samples. The minimum I/O sample is 2 bytes. Therefore the maximum possible usable value for **IT** is 53 (or 0x35).

API support

I/O data is sent out the UART using an API frame. All other data can be sent and received using Transparent Operation or API frames if API mode is enabled (**AP** > 0).

API Operations support two RX (Receive) frame identifiers for I/O data (set 16-bit address to 0xFFFE and the device does 64-bit addressing):

- 0x82 for RX Packet: 64-bit Address I/O
- 0x83 for RX Packet: 16-bit Address I/O

The API command header is the same as shown in 64-bit Receive Packet - 0x80 and 16-bit I/O Sample Indicator - 0x83. RX data follows the format described in I/O data format.

Periodic I/O sampling

Periodic I/O sampling is done by periodically gathering samples on the source node and sending the samples to the destination node to output on its serial port.

Source node

On the source node, the **IR** parameter specifies how many milliseconds between samples. The **IT** parameter specifies how many samples will be sent OTA in a single packet, and the **DH**/**DL** parameters designate the node that will receive the samples. In addition **MM** must be 0 or 3 for I/O samples to be sent.

The maximum value of **IR** is 0xFFFF. If **IR** is 0, periodic I/O sampling is disabled. Otherwise, **IR** specifies the number of milliseconds between samples.

If **IT** is 0, than an I/O sample is sent every **IR** milliseconds. If **IR** is greater than 0, then an I/O sample is sent every **IR***IT milliseconds. Any single-byte value (0 - 0xFF) is accepted for input. However, the value is adjusted downward based on how many I/O samples can fit into a maximum size packet. A query of the **IT** parameter after changes are applied tells how many I/O samples will actually occur. Since **MM** must be 0 or 3 to send I/O samples, the maximum payload in the best of conditions (short source address, short destination address, and no encryption) is 114 bytes. Seven of those bytes are used by the command header and the I/O header, leaving 107 bytes for I/O samples. The minimum I/O sample is 2 bytes. Therefore the maximum possible usable value for **IT** is 53 (or 0x35).

Although samples may be taken every millisecond, **IR*IT** should be at least 20 milliseconds. This allows time for OTA transmission and output on the serial port of the receiving module.

Destination node

On the destination node, the **IU** parameter enables the serial port to output I/O samples it receives. **IU** is set to 1 by default. If **IU** is set and the destination node is not in Command mode, it displays samples it receives on its serial port in API format. The **AP** parameter is ignored in this case.

Data format

The I/O sample is formatted as follows:

IT	Mask	Samples
1 byte	2 bytes	2 * number of samples

The **IT** field is described above.

The Mask is a bit field formatted as follows:

Reserved	A3 - A0	D8 - D0
3 bits	4 analog bits	9 digital bits

If you set any of the digital bits, then a digital sample follows the Mask.

For every analog bit that is set, there is a 10-bit sample using two bytes where **A0** is included first and **A3** is included last.

The number of samples indicated by the mask is repeated **IT** times. The mask is not repeated.

The sending node sends I/O samples to the address specified by **DH**/**DL**. The receiving node displays the samples as described above, providing API mode is enabled, the node is not in Command mode, and the **IU** parameter is 1 (**IU** is 1 by default). If any of these are false, the I/O sample is discarded without being displayed.

Change Detect I/O sampling

When you use the IC (DIO Change Detect) command to enable DIO Change Detect, DIO lines 0 - 7 are monitored. When a change is detected on a DIO line, the following occurs:

1. This packet does not contain DIO8 and does not contain any analog samples. However, it does contain a digital reading of the D0 - D7 pins configured for input or output, whether or not all those bits are set in **IC**.
2. Any queued samples are transmitted before the change detect data. This may result in receiving a packet with less than **IT** (Samples before TX) samples.

Change detect does not affect Pin Sleep wake-up. The D8 pin (DI8/SLEEP_RQ/$\overline{\text{DTR}}$) is the only line that wakes a device from Pin Sleep. If not all samples are collected, the device still enters Sleep mode after a change detect packet is sent.

Change detect is only supported when the **Dx** (DIOx Configuration) parameter equals 3, 4 or 5.

Wakeup I/O sampling

Bit 2 of the **SO** parameter specifies whether or not the device automatically samples the ADC/DIO lines on wakeup. On the receiving side the I/O sample may go to the I/O pins, the serial port, both, or neither based on the settings of the **IA** (I/O Input Address) and **IU** (I/O Output Enable) parameters.

For more information, see SO (Sleep Options), IA (I/O Input Address), and IU (I/O Output Enable).

Sample rate (interval)

The Sample Rate (Interval) feature allows enabled ADC and DIO pins to be read periodically on devices that are not configured to operate in Sleep Mode. When one of the Sleep Modes is enabled and the IR (Sample Rate) parameter is set, the device stays awake until IT (Samples before TX) samples have been collected.

Once a particular pin is enabled, the appropriate sample rate must be chosen. The maximum sample rate that can be achieved while using one A/D line is 1 sample/ms or 1 kHz. The device cannot keep up with transmission when **IR** and **IT** are equal to 1 and we do not recommend configuring the device to sample at rates greater than once every 20 ms.

I/O line passing

You can configure XBee/XBee-PRO S2C 802.15.4 RF Modules to perform analog and digital line passing. When a device receives an RF I/O sample data packet, you can set up the receiving device to update any enabled outputs (PWM and DIO) based on the data it receives.

Digital I/O lines are mapped in pairs; pins configured as digital input on the transmitting device affect the corresponding digital output pin on the receiving device. For example: DI5 (pin 25) can only update DO5 (pin 25).

No I/O line passing occurs if the receiving device does not have the corresponding pins set for output.

For Analog Line Passing, the XBee/XBee-PRO S2C 802.15.4 RF Module has two PWM output pins that simulate the voltage measured by the ADC lines AD0 and AD1. For example, when configured as an ADC, AD0 (pin 33) updates PWM0 (pin 7); AD1 (pin 32) updates PWM1 (pin 8).

The default setup is for outputs to not be updated. Instead, a device sends I/O sample data out the serial interface in API mode, even if the destination node is not configured for API mode. You can use the **IU** command to disable sample data output.

To enable updating the outputs, set the **IA** (I/O Input Address) parameter with the address of the device that has the appropriate inputs enabled. This effectively binds the outputs to a particular device's input. This does not affect the ability of the device to receive I/O line data from other devices - only its ability to update enabled outputs. Set the **IA** parameter to 0xFFFF (broadcast address) to set up the device to accept I/O data for output changes from any device on the network.

For line passing to function, the device configured with inputs must generate sample data.

When outputs are changed from their configured state, the device can be setup to return the output level to its configured state after a timer expires. The timers are set using the **T*n*** (**D*n*** Output Timer) and **PT** (PWM Output Timeout) commands. The timers are reset every time the device receives a valid I/O sample packet with a matching **IA** address. You can adjust the **IT** (Samples before TX) and **IR** (Sample Rate) parameters on the transmitting device to keep the outputs set to their active output if the system needs more time than the timers can handle. Alternatively, the timers can be set to 0xFF, which prevents them from expiring (in other words, the outputs remain in the state specified by the input device indefinitely).

I/O line passing details

The same message is received for both I/O sampling and for I/O line passing. But I/O line passing only occurs if **IA** matches the short or long address of the sending node or if **IA** is 0xFFFF to match a sample from any node. The default value of **IA** is 0xFFFFFFFF, which prevents I/O line passing from occurring on the node because no node has that address. Additionally, the receiving device must have a matching value for output. For example, if an ADC0 sample is received, then **P0** must be configured with 2 for PWM output. Otherwise, the analog signal will not be reflected with a matching PWM signal. Likewise, if the sample indicates that D2 is high, but **D2** is not set to 4 or 5 on the receiving device, then the D2 pin will not be affected by I/O line passing.

When a digital output pin is set to something different than its configured value, that pin may return to its configured value after the time specified for the corresponding timer. **T0** specifies how long D0 will hold its non-configured value and **T1** specifies how long D1 will hold its non-configured value. A value of 0xFF indicates that a pin holds the value of the input of the corresponding device indefinitely and a value less than 0xFF specifies how many tenth second units the pin holds the non-configured value.

For PWM outputs, PT timer applies to both PWM0 and PWM1. A value of 0xFF allows the PWM pin to output a duty cycle reflective of the analog input indefinitely and a smaller value indicates how many 10th second units before PWM output reverts to the duty cycle specified by **M0** or **M1**.

Output control

The **IO** (Digital Output Level) command controls the output levels of D0 through D7 that are configured as output pins (either 4 or 5). These values override the configured output levels of the pins until they are changed again (the pins do not automatically revert to their configured values after a timeout.) You can use the **IO** command to trigger a sample on change detect.

Sleep support

Set SO (Sleep Options) bit 1 to suppress automatic wake-up sampling.

When a device wakes, it always performs a sample based on any active ADC or DIO lines. This allows sampling based on the sleep cycle whether it be Cyclic Sleep (**SM** = 4 or 5) or Pin Sleep (**SM** = 1). Set the IR (Sample Rate) parameter to gather more samples when awake.

For Cyclic Sleep modes: If the **IR** parameter is set, the device stays awake until the IT (Samples before TX) parameter is met. The device stays awake for ST (Time before Sleep).

Sleep modes

Sleep modes enable the device to enter states of low-power consumption when not in use. In order to enter Sleep mode, one of the following conditions must be met (in addition to the device having a non-zero **SM** parameter value):

- SLEEP_RQ/$\overline{\text{DTR}}$ (TH pin 9/SMT pin 10) is asserted and the device is in a pin sleep mode (**SM** = 1, or 5)
- The device is idle (no data transmission or reception) for the amount of time defined by the **ST** (Time before Sleep) parameter.

Note **ST** is only active when **SM** = 4 or 5.

The following table shows the sleep mode configurations.

Sleep mode	Description
SM 0	No sleep
SM 1	Pin sleep
SM 4	Cyclic sleep
SM 5	Cyclic sleep with pin wake-up

Pin Sleep mode (SM = 1)

Pin Sleep mode minimizes quiescent power (power consumed when in a state of rest or inactivity). This mode is voltage level-activated; when Sleep_RQ (TH pin 9/SMT pin 10) is asserted, the device finishes any transmit, receive or association activities, enters Idle mode, and then enters a state of sleep. The device does not respond to either serial or RF activity while in pin sleep.

To wake a sleeping device operating in Pin Sleep mode, de-assert Sleep_RQ. The device wakes when Sleep_RQ is de-asserted and is ready to transmit or receive when the $\overline{\text{CTS}}$ line is low. When waking the device, the pin must be de-asserted at least two 'byte times' after $\overline{\text{CTS}}$ goes low. This assures that there is time for the data to enter the DI buffer.

Cyclic Sleep mode (SM = 4)

The Cyclic Sleep modes allow devices to periodically check for RF data. When the **SM** parameter is set to 4, the XBee/XBee-PRO S2C 802.15.4 RF Module is configured to sleep, then wakes once per cycle to check for data from a coordinator. The Cyclic Sleep Remote sends a poll request to the coordinator at a specific interval set by the **SP** (Cyclic Sleep Period) parameter. The coordinator transmits any queued data addressed to that specific remote upon receiving the poll request.

ON_SLEEP goes high and $\overline{\text{CTS}}$ goes low each time the remote wakes, allowing for communication initiated by the remote host if desired.

Cyclic Sleep with Pin Wake-up mode (SM = 5)

Use this mode to wake a sleeping remote device through either the RF interface or by de-asserting SLEEP_RQ for event-driven communications. The cyclic sleep mode works as described previously with the addition of a pin-controlled wake-up at the remote device. The SLEEP_RQ pin is level-triggered. The device wakes when a low is detected then set $\overline{\text{CTS}}$ low as soon as it is ready to transmit or receive.

Any activity resets the **ST** (Time before Sleep) timer, so the device goes back to sleep only after there is no activity for the duration of the timer. Once the device wakes (pin-controlled), it ignores further pin activity. The device transitions back into sleep according to the **ST** time regardless of the state of the pin.

Sleep parameters

The following AT commands are associated with the sleep modes. See the linked commands for the parameter's description, range and default values.

- SM (Sleep Mode)
- SO (Sleep Options)
- A1 (End Device Association)
- ST (Time before Sleep)

- SP (Cyclic Sleep Period)
- DP (Disassociated Cyclic Sleep Period)

Sleep current

The following table shows the sleep current during the XBee/XBee-PRO S2C 802.15.4 RF Module sleep modes.

Sleep mode	SM command setting	Sleep current
Pin sleep	1	<1 µA @ 25ºC
Cyclic sleep	4	<1 µA @ 25ºC
Cyclic sleep with pin wake-up	5	<1 µA @ 25ºC

You can make devices use low sleep current by driving PWM outputs high during sleep and by using internal pull-ups/pull-downs on disabled/unused pins. The sleep pins are set up for sleeping as specified in Sleep pins. Additionally, pins that are outputs (other than PWM outputs) continue to output the same levels during sleep. Normally, this means that pins configured for output high or low will output high or low accordingly. However, if the output is overridden by I/O line passing, then the overridden output level is maintained during the sleep time.

Sleep pins

The following table describes the three external device pins associated with sleep. For more details about the pins, see Pin signals.

Pin name	Pin number	Description
SLEEP_RQ	TH pin 9/SMT pin 10	For **SM** = 1, high puts the device to sleep and low wakes it up. For **SM** = 5, a high to low transition wakes the device up for **ST** time. The device ignores a low to high transition in **SM** = 5.
$\overline{\text{CTS}}$	TH pin 12/SMT pin 25	If **D7** = 1, high indicates that the device is asleep and low indicates that it is awake and ready to receive serial data.
ON_$\overline{\text{SLEEP}}$	TH pin 13/SMT pin 26	Low indicates that the device is asleep and high indicates that it is awake and ready to receive serial data. For the XBee/XBee-PRO S2C 802.15.4 RF Module, this pin cannot be configured to anything different.

Direct and indirect transmission

There are two methods to transmit data:

- Direct transmission: data is transmitted immediately to the Destination Address
- Indirect transmission: a packet is retained for a period of time and is only transmitted after the destination device (source address = destination address) requests the data.

Indirect transmissions can only occur on a Coordinator. Thus, if all nodes in a network are End Devices, only direct transmissions occurs. Indirect transmissions are useful to ensure packet delivery to a sleeping node. The Coordinator currently is able to retain up to five two indirect messages.

Direct transmission

A Coordinator can be configured to use only direct transmission by setting the **SP** (Cyclic Sleep Period) parameter to 0. Also, a Coordinator using indirect transmissions reverts to direct transmission if it knows the destination device is awake.

To enable this behavior, the **ST** (Time before Sleep) value of the Coordinator must be set to match the **ST** value of the End Device. Once the End Device either transmits data to the Coordinator or polls the Coordinator for data, the Coordinator uses direct transmission for all subsequent data transmissions to that device address until **ST** time occurs with no activity (at which point it reverts to using indirect transmissions for that device address). "No activity" means no transmission or reception of messages with a specific address. Broadcast messages do not reset the **ST** timer.

Indirect transmission

To configure Indirect Transmissions in a Personal Area Network (PAN), the **SP** (Cyclic Sleep Period) parameter value on the Coordinator must be set to match the longest sleep value of any End Device. The sleep period value on the Coordinator determines how long (time or number of beacons) the Coordinator retains an indirect message before discarding it.

An End Device must poll the Coordinator once it wakes from Sleep to determine if the Coordinator has an indirect message for it. For Cyclic Sleep Modes, this is done automatically every time the device wakes (after **SP** time). For Pin Sleep Modes, the **A1** (End Device Association) parameter value must be set to enable Coordinator polling on pin wake-up (set in bit 3). Alternatively, an End Device can use the **FP** (Force Poll) command to poll the Coordinator as needed.

Acknowledgment

If the transmission is not a broadcast message, the device expects to receive an acknowledgment from the destination node. If an acknowledgment is not received, the packet is resent up to three more times. If the acknowledgment is not received after all transmissions, an ACK failure is recorded.

Node discovery

Node discovery has three variations as shown in the following table:

Commands	Syntax	Description
Node Discovery	**ND**	Seeks to discover all nodes in the network (on the current PAN ID).
Directed Node Discovery	**ND** <NI String>	Seeks to discover if a particular node named <NI String> is found in the network.
Destination Node	**DN** <NI String>	Sets **DH**/**DL** to point to the MAC address of the node whose <NI String> matches.

Node discovery

The node discovery command (without an NI string designated) sends out a broadcast to every node in the PAN ID. Each node in the PAN sends a response back to the requesting node.

When the node discovery command is issued in AT command mode, all other AT commands are inhibited until the node discovery command times out, as specified by the **NT** parameter. After the timeout, an extra CRLF is output to the terminal window, indicating that new AT commands can be entered. This is the behavior whether or not there were any nodes that responded to the broadcast.

When the node discovery command is issued in API mode, the behavior is the same except that the response is output in API mode. If no nodes respond, there will be no responses at all to the node discover command. The requesting node is not able to process a new AT command until **NT** times out.

Node discovery in compatibility mode

Node discovery (without an **NI** string parameter) in compatibility mode operates the same in compatibility mode as it does outside of compatibility mode with one minor exception:

If **C8** bit 1 is set and if requesting node is operating in API mode and if no responses are received by the time **NT** times out, then an API AT command response of OK (API frame type 0x88) is sent out the serial port rather than giving no response at all, which would happen if **C8** bit 1 is not set.

Directed node discovery

The directed node discovery command (**ND** with an **NI** string parameter) sends out a broadcast to find a node in the network with a matching NI string. If such a node exists, it sends a response with its information back to the requesting node.

In Transparent mode, the requesting node will output an extra CRLF following the response from the designated node and the command will terminate, being ready to accept a new AT command. In the event that the requested node does not exist or is too slow to respond, the requesting node outputs an ERROR response after **NT** expires.

In API mode, the response from the requesting node will be output in API mode and the command will terminate immediately. If no response comes from the requested node, the requesting node outputs an error response in API mode after NT expires.

Directed node discovery in compatibility mode

The behavior of the Legacy 802.15.4 module (S1 hardware) varies with the default behavior described above for the directed node discovery command. The Legacy module does not complete the command until **NT** expires, even if the requested node responds immediately. After **NT** expires, it gives a successful response, even if the requested node did not respond. To enable this behavior to be equivalent to the Legacy 802.15.4 module, set bit 1 of the **C8** parameter.

Destination Node

The Destination Node command (**DN** with an **NI** string parameter) sends out a broadcast containing the **NI** string being requested. The responding node with a matching **NI** string sends its information back to the requesting node. The local node then sets **DH**/**DL** to match the address of the responding node. As soon as this response occurs, the command terminates successfully. If operating in AT command mode, an OK string is output and command mode exits. In API mode another AT command may be entered.

If an NI string parameter is not provided, the **DN** command terminates immediately with an error. If a node with the given NI string doesn't respond, the **DN** command terminates with an error after **NT** times out.

Unlike **ND** (with or without an **NI** string), **DN** does not cause the information from the responding node to be output; rather it simply sets **DH**/**DL** to the address of the responding node. If the responding node has a short address, then **DH**/**DL** is set to that short address (with **DH** at 0 and the

ms 16 bits of **DL** at 0). If the responding node has a long address (**MY** is FFFE), then **DH**/**DL** are set to the **SH**/**SL** of the responding node.

Remote configuration commands

The API firmware has provisions to send configuration commands to remote devices using the Remote AT Command Request frame (0x17); see Remote AT Command Request - 0x17. You can use this frame to send commands to a remote device to read or set command parameters.

CAUTION! It is important to set the short address to 0xFFFE when sending to a long address. Any other value causes the long address to be ignored. This is particularly problematic in the case where nodes are set up with default addresses of 0 and the 16-bit address is erroneously left at 0. In that case, even with a correct long address the remote command goes out to all devices with the default short address of 0, potentially resulting in harmful consequences, depending on the command.

Send a remote command

To send a remote command populate the Remote AT Command Request frame (0x17) with:

1. The 64-bit address and of the remote device.
2. The correct command options value.
3. The command and parameter data (optional). If and only if all nodes in the PAN have unique short addresses, then remote configuration commands can be sent to 16-bit short addresses by setting the short address in the API frame for Remote AT commands. In that case, the 64-bit address is unused and does not matter.

Apply changes on remote devices

Any changes you make to the configuration command registers using AT commands do not take effect until you apply the changes. For example, if you send the **BD** command to change the baud rate, the actual baud rate does not change until you apply the changes. To apply changes:

1. Set the Apply Changes option bit in the Remote AT Command Request frame (0x17).
2. Issue an **AC** (Apply Changes) command to the remote device.
3. Issue a **WR** + **FR** command to the remote device to save changes and reset the device.

Remote command responses

If the remote device receives a remote command request transmission, and the API frame ID is non-zero, the remote sends a remote command response transmission back to the device that sent the remote command. When a remote command response transmission is received, a device sends a remote command response API frame out its serial port. The remote command response indicates the status of the command (success, or reason for failure), and in the case of a command query, it includes the register value. The device that sends a remote command will not receive a remote command response frame if either of the following conditions exist:

- The destination device could not be reached.
- The frame ID in the remote command request is set to 0.

AT commands

Special commands 82
Networking and security commands 82
RF interfacing commands 98
Sleep commands 100
Serial interfacing commands 102
I/O settings commands 105
I/O line passing commands 116
Diagnostic commands 119
Command mode options 121

Special commands

The following commands are special commands.

WR (Write)

This command applies to the XBee/XBee-PRO S2C 802.15.4 RF Module.

Writes parameter values to non-volatile memory so that parameter modifications persist through subsequent resets.

Writing parameters to non-volatile memory does not apply the changes immediately. However, since the device uses non-volatile memory to determine initial configuration following reset, the written parameters are applied following a reset.

Note Once you issue a **WR** command, do not send any additional characters to the device until after you receive the **OK** response.

Parameter range

N/A

Default

N/A

RE (Restore Defaults)

This command applies to the XBee/XBee-PRO S2C 802.15.4 RF Module.

Restore device parameters to factory defaults. Does not exit out of Command mode.

Parameter range

N/A

Default

N/A

FR (Software Reset)

This command applies to the XBee/XBee-PRO S2C 802.15.4 RF Module.

Resets the device. The device responds immediately with an **OK** and performs a reset 100 ms later.

If you issue **FR** while the device is in Command Mode, the reset effectively exits Command mode.

Parameter range

N/A

Default

N/A

Networking and security commands

The following AT commands are networking and security commands.

C8 (802.15.4 Compatibility)

This command applies to the XBee/XBee-PRO S2C 802.15.4 RF Module.

Sets or displays the operational compatibility with the Legacy 802.15.4 module (S1 hardware).

Parameter range

0 - 3

Bit field:

Bit	Meaning	Setting	Description
0[1]	TX compatibility	0	Transmissions are optimized as follows: 1. Maximum transmission size is affected by multiple factors (**MM**, **MY**, **DH**, **DL**, and **EE**). See Maximum payload rules. In the best case, with no app header, short source and destination addresses, and no encryption, the maximum transmission size is 116 bytes. 2. Multiple messages can be present simultaneously on the active queue, providing they are all destined for different addresses. This improves performance.
		1	Transmissions operate like the Legacy 802.15.4 module, which means the following: 1. Maximum transmission size is 95 bytes for encrypted packets and 100 bytes for un-encrypted packets. These maximum transmission sizes are not adjusted upward for short addresses or for lack of an APP header. 2. Only one transmission message can be active at a time, even if other messages in the queue would go to a different destination address.
1	Node Discovery compatibility	0	Node discovery operates like other XBee devices and not like the Legacy 802.15.4 module. This means the following: 1. A directed **ND** request terminates after the single response arrives. This allows the device to process other commands without waiting for the **NT** to time out. 2. The device outputs an error response to the directed **ND** request if no response occurs within the time out.
		1	The module operates like the Legacy 802.15.4 module, which has the following effect: 1. When the expected response arrives, the command remains active until **NT** times out. (**NT** defaults to 2.5

[1]This bit does not normally need to be set. However, when the XBee/XBee-PRO S2C 802.15.4 RF Module is streaming broadcasts in transparent mode to a Legacy 802.15.4 module (S1 hardware), and **RR** > 0, then this bit does need to be set to avoid a watchdog reset on the Legacy 802.15.4 module.

Bit	Meaning	Setting	Description
			seconds.) This prevents the device from processing any other AT command, even if the desired response occurs immediately. 2. When the timeout occurs, the command silently terminates and indicates success, whether or not a response occurred within the **NT** timeout.

Default

0

CH (Operating Channel)

This command applies to the XBee/XBee-PRO S2C 802.15.4 RF Module.

Set or read the operating channel devices used to transmit and receive data. The channel is one of three addressing configurations available to the device. The other configurations are the PAN ID (**ID** command) and destination addresses (**DL** and **DH** commands).

In order for devices to communicate with each other, they must share the same channel number. A network can use different channels to prevent devices in one network from listening to the transmissions of another. Adjacent channel rejection is 23 dB.

The command uses 802.15.4 channel numbers. Center frequency = 2405 MHz + (**CH** - 11 decimal) * 5 MHz.

Parameter range

0xB - 0x1A (XBee)

0x0C - 0x17 (XBee-PRO)

Default

0xC (12 decimal)

ID (Network ID)

This command applies to the XBee/XBee-PRO S2C 802.15.4 RF Module.

Set or read the user network identifier.

Devices must have the same network identifier to communicate with each other.

Devices can only communicate with other devices that have the same network identifier and channel configured.

Setting the **ID** parameter to **0xFFFF** indicates a global transmission for all PANs. It does not indicate a global receive.

Parameter range

0 - 0xFFFF

Default

0x3332 (13106 decimal)

DH (Destination Address High)

This command applies to the XBee/XBee-PRO S2C 802.15.4 RF Module.

Set or read the upper 32 bits of the 64-bit destination address. When you combine **DH** with **DL**, it defines the destination address that the device uses for transmissions in Transparent mode.

The destination address is also used for I/O sampling in both Transparent and API modes.

To transmit using a 16-bit address, set **DH** to 0 and **DL** less than 0xFFFF.

0x000000000000FFFF is the broadcast address. It is also used as the polling address when the device functions as end device.

Parameter range

0 - 0xFFFFFFFF

Default

0

DL (Destination Address Low)

This command applies to the XBee/XBee-PRO S2C 802.15.4 RF Module.

Set or display the lower 32 bits of the 64-bit destination address. When you combine **DH** with **DL**, it defines the destination address that the device uses for transmissions in Transparent mode.

The destination address is also used for I/O sampling in both Transparent and API modes.

0x000000000000FFFF is the broadcast address. It is also used as the polling address when the device functions as end device.

Parameter range

0 - 0xFFFFFFFF

Default

0

MY (Source Address)

This command applies to the XBee/XBee-PRO S2C 802.15.4 RF Module.

Sets or displays the device's 16-bit source address. Set **MY** = 0xFFFF to disable reception of packets with 16-bit addresses. Regardless of **MY**, messages addressed to the 64-bit long address of the device are always delivered.

Parameter range

0 - 0xFFFF

Default

0

SH (Serial Number High)

This command applies to the XBee/XBee-PRO S2C 802.15.4 RF Module.

Displays the upper 32 bits of the unique IEEE 64-bit extended address assigned to the product family in the factory.

The 64-bit source address is always enabled. This value is read-only and it never changes.

Parameter range

0 - 0xFFFFFFFF [read-only]

Default

Set in the factory

SL (Serial Number Low)

This command applies to the XBee/XBee-PRO S2C 802.15.4 RF Module.

Displays the lower 32 bits of the unique IEEE 64-bit RF extended address assigned to the product family in the factory.

The device's serial number is set at the factory and is read-only.

Parameter range

0 - 0xFFFFFFFF [read-only]

Default

Set in the factory

MM (MAC Mode)

This command applies to the XBee/XBee-PRO S2C 802.15.4 RF Module.

The **MM** command is used to set and read the MAC Mode value. The **MM** command disables/enables the use of a Digi header contained in the 802.15.4 RF packet. By default (**MM** = 0), Digi Mode is enabled and the module adds an extra header to the data portion of the 802.15.4 packet. This enables the following features:

- **ND** and **DN** command support
- Duplicate packet detection when using ACKs
- Remote command support
- **RR** command
- DIO/AIO sampling support
- OTA firmware updates

The **MM** command allows users to turn off the use of the extra header. Modes 1 and 2 are strict 802.15.4 modes. If the Digi header is disabled, the features above are also disabled.

When **MM** = **1** or **3**, MAC retries are not supported.

When the Digi header is disabled, encrypted data that is not valid will be sent out of the UART and not filtered out.

Parameter range

0 - 3

Parameter	Configuration
0	Digi Mode (802.15.4 + Digi header)
1	802.15.4 (no ACKs)
2	802.15.4 (with ACKs)
3	Digi Mode (no ACKs)

Default

0

RR (XBee Retries)

This command applies to the XBee/XBee-PRO S2C 802.15.4 RF Module.

Set or reads the maximum number of retries the device executes in addition to the three retries provided by the 802.15.4 MAC. For each device retry, the 802.15.4 MAC can execute up to three retries.

The following applies for broadcast messages: If **RR** = **0**, only one packet is broadcast. If **RR** is > **0**, **RR** + 2 packets are sent on each broadcast. No acknowledgments are returned on a broadcast.

This value does not need to be set on all devices for retries to work. If retries are enabled, the transmitting device sets a bit in the Digi RF Packet header that requests the receiving device to send an ACK. If the transmitting device does not receive an ACK within 200 ms, it re-sends the packet within a random period up to 48 ms. Each device retry can potentially result in the MAC sending the packet four times (one try plus three retries). Retries are not attempted for indirect messages that are purged.

Parameter range

0 - 6

Default

0

RN (Random Delay Slots)

This command applies to the XBee/XBee-PRO S2C 802.15.4 RF Module.

Sets or displays the minimum value of the back-off exponent in the CSMA-CA algorithm. The Carrier Sense Multiple Access - Collision Avoidance (CSMA-CA) algorithm was engineered for collision avoidance(random delays are inserted to prevent data loss caused by data collisions.

If **RN** = 0, there is no delay between a request to transmit and the first iteration of CSMA-CA.

Unlike CSMA-CD, which reacts to network transmissions after collisions have been detected, CSMA-CA acts to prevent data collisions before they occur. As soon as a device receives a packet that is to be transmitted, it checks if the channel is clear (no other device is transmitting). If the channel is clear, the packet is sent over-the-air. If the channel is not clear, the device waits for a randomly selected period of time, then checks again to see if the channel is clear. After a time, the process ends and the data is lost.

Parameter range

0 - 3 (exponent)

Default

0

ND (Network Discovery)

This command applies to the XBee/XBee-PRO S2C 802.15.4 RF Module.

Discovers and reports all devices found in the network. For each discovered device, the following information is returned after a jittered time delay:

Node discover response when issued in Command mode:

MY<CR> (2 bytes) (always 0xFFFE)

SH<CR> (4 bytes)

SL<CR> (4 bytes)

DB<CR> (Contains the detected signal strength of the response in negative dBm units)

NI <CR> (variable, 0-20 bytes plus 0x00 character)

PARENT_NETWORK ADDRESS<CR> (2 bytes)

DEVICE_TYPE<CR> (1 byte: **0** = Coordinator, **1** = Router, **2** = End Device)

STATUS<CR> (1 byte: reserved)

PROFILE_ID<CR> (2 bytes)

MANUFACTURER_ID<CR> (2 bytes)

DIGI DEVICE TYPE<CR> (4 bytes. Optionally included based on **NO** settings.)

RSSI OF LAST HOP<CR> (1 byte. Optionally included based on **NO** settings.)

A second carriage return will indicate the network discovery timeout (**NT**) has expired.

When operating in API mode and a Network Discovery is issued as a 0x08 or 0x09 frame, the response will contain binary data except for the **NI** string in the following format:

2 bytes for Short Source Address

4 bytes for Upper Long Address

4 bytes for Lower Long Address

1 byte for the signal strength in -dBm (two's compliment representation)

NULL-terminated string for **NI (Node Identifier)** value (maximum 20 bytes without NULL terminator)

Each device that responds to the request will generate a separate Local AT Command Response - 0x88.

Broadcast an **ND** command to the network. If the command includes an optional node identifier string parameter, only those devices with a matching **NI** string respond without a random offset delay. If the command does not include a node identifier string parameter, all devices respond with a random offset delay.

The **NT** setting determines the maximum timeout (13 seconds by default), this value is sent along with the discovery broadcast and determines the random delay the remote nodes use to prevent the responses from colliding.

For more information about options that affect the behavior of the **ND** command Refer to the description of the **NO** command for options which affect the behavior of the **ND** command.

WARNING! If the **NT** setting is small relative to the number of devices on the network, responses may be lost due to channel congestion. Regardless of the **NT** setting, because the random offset only mitigates transmission collisions, getting responses from all devices in the network is not guaranteed.

Parameter range

20-byte printable ASCII string

Default

N/A

NT (Node Discover Timeout)

This command applies to the XBee/XBee-PRO S2C 802.15.4 RF Module.

Sets the amount of time a base node waits for responses from other nodes when using the **ND** (Node Discover) command. The **NT** value is transmitted with the **ND** command.

Remote nodes set up a random hold-off time based on this time. Once the **ND** command has ended, the base discards any response it receives.

Parameter range

0x1 - 0xFC (x 100 ms)

Default

0x19 (2.5 decimal seconds)

NO (Node Discovery Options)

This command applies to the XBee/XBee-PRO S2C 802.15.4 RF Module.

Use **NO** to suppress or include a self-response to **ND** (Node Discover) commands. When **NO** bit 1 = 1, a device performing a Node Discover includes a response entry for itself.

Parameter range

0 - 1

Default

0x0

DN (Discover Node)

This command applies to the XBee/XBee-PRO S2C 802.15.4 RF Module.

Resolves an **NI** (Node identifier) string to a physical address (case sensitive).

The following events occur after **DN** discovers the destination node:

When **DN** is sent in Command mode :

1. The device sets **DL** and **DH** to the address of the device with the matching **NI** string.
   The address selected (either 16-bit short address or 64-bit extended address) is chosen based on the destination device's **MY** command configuration.
2. The receiving device returns **OK** (or **ERROR**).
3. The device exits Command mode to allow for immediate communication. If an ERROR is received, then Command mode does not exit.

When **DN** is sent as a local AT Command API frame:

1. The receiving device returns the 16-bit network and 64-bit extended addresses in an API Command Response frame.
2. If there is no response from a module within (**NT*** 100) milliseconds or you do not specify a parameter (by leaving it blank), the receiving device returns an ERROR message. In the case of an ERROR, the device does not exit command mode. Set the radius of the **DN** command using the **BH** command.

When **DN** is sent as a local Local AT Command Request - 0x08:

1. The receiving device returns a success response in a Local AT Command Response - 0x88.
2. If there is no response from a module within (**NT** * 100) milliseconds or you do not specify a parameter (by leaving it blank), the receiving device returns an ERROR message.

Parameter range

20-byte ASCII string

Default

N/A

CE (Coordinator Enable)

This command applies to the XBee/XBee-PRO S2C 802.15.4 RF Module.

The routing and messaging mode of the device.

Parameter range

0 - 1

Parameter	Description
0	End Device
1	Coordinator

Default

0

SC (Scan Channels)

This command applies to the XBee/XBee-PRO S2C 802.15.4 RF Module.

Sets or displays the list of channels to scan for all Active and Energy Scans as a bit field. This affects scans initiated in the **AS** (Active Scan) and **ED** (Energy Scan) commands in Command mode and during End Device Association and Coordinator startup.

Parameter range

0 - 0xFFFF (bit field)

Bit field mask:

Bit	Parameter
0	0x0B (not available on XBee-PRO)
1	0x0C
2	0x0D
3	0x0E
4	0x0F
5	0x10
6	0x11
7	0x12
8	0x13
9	0x14
10	0x15
11	0x16
12	0x17
13	0x18 (not available on XBee-PRO)
14	0x19 (not available on XBee-PRO)
15	0x1A (not available on XBee-PRO)

Default

0x1FFE

SD (Scan Duration)

This command applies to the XBee/XBee-PRO S2C 802.15.4 RF Module.

Sets or displays the scan duration exponent.

Coordinator: If you set the **ReassignPANID** option on the coordinator (refer to A2 (Coordinator Association)), **SD** determines the length of time the coordinator scans channels to locate existing PANs. If you set the **ReassignChannel** option, **SD** determines how long the coordinator performs an Energy Scan to determine which channel it will operate on.

End Device: Duration of Active Scan during Association. In a Beacon system, set **SD**=**BE** of the coordinator. **SD** must be set at least to the highest **BE** parameter of any Beaconing Coordinator with which an end device or coordinator wants to discover.

Scan Time is measured as:

([# of channels to scan] * (2 ^**SD**) * 15.36 ms) + (38 ms * [# of channels to scan]) + 20 ms

Use the **SC** (Scan Channels) command to set the number of channels to scan. The XBee can scan up to 16 channels (**SC** = 0xFFFF). The XBee-PRO can scan up to 13 channels (**SC**= 0x1FFE).

SD influences the time the MAC listens for beacons or runs an energy scan on a given channel.

Example

The following table shows the results for a thirteen channel scan.

SD setting	Time
0	0.18 s
2	0.74 s
4	2.95 s
6	11.80 s
8	47.19 s
10	3.15 min
12	12.58 min
14	50.33 min

Parameter range

0 - 0x0F (exponent)

Default

4

A1 (End Device Association)

This command applies to the XBee/XBee-PRO S2C 802.15.4 RF Module.

Sets or displays the End Device association options.

Parameter range

0 - 0x0F (bit field)

Bit field:

Bit	Meaning	Setting	Description
0	Allow PanId reassignment	0	Only associates with Coordinator operating on PAN ID that matches device ID.
		1	May associate with Coordinator operating on any PAN ID.
1	Allow Channel reassignment	0	Only associates with Coordinator operating on matching **CH** channel setting.
		1	May associate with Coordinator operating on any channel.
2	Auto Associate	0	Device will not attempt association.
		1	Device attempts association until success.
3	Poll coordinator on pin wake	0	Pin Wake does not poll the Coordinator for indirect (pending) data.

Bit	Meaning	Setting	Description
		1	Pin Wake sends Poll Request to Coordinator to extract any pending data.
4 - 7	Reserved		

Default

0

A2 (Coordinator Association)

This command applies to the XBee/XBee-PRO S2C 802.15.4 RF Module.

Sets or displays the Coordinator association options.

Parameter range

0 - 7 (bit field)

Bit field:

Bit	Meaning	Setting	Description
0	Allow Pan ID reassignment	0	Coordinator will not perform Active Scan to locate available PAN ID. It operates on ID (PAN ID).
		1	Coordinator performs an Active Scan to determine an available **ID** (PAN ID). If a PAN ID conflict is found, the **ID** parameter will change.
1	Allow Channel reassignment	0	Coordinator will not perform Energy Scan to determine free channel. It operates on the channel determined by the **CH** parameter.
		1	Coordinator performs an Energy Scan to find the quietest channel, then operates on that channel.
2	Allow Association	0	Coordinator will not allow any devices to associate to it.
		1	Coordinator allows devices to associate to it.
3 - 7	Reserved		

The binary equivalent of the default value (0x06) is 00000110. ‘Bit 0’ is the last digit of the sequence.

Default

0

AI (Association Indication)

This command applies to the XBee/XBee-PRO S2C 802.15.4 RF Module.

Reads the Association status code to monitor association progress. The following table provides the status codes and their meanings.

Status code	Meaning
0x00	Coordinator successfully started, End device successfully associated, or operating in peer to peer mode where no association is needed.
0x03	Active Scan found a PAN coordinator, but it isn't currently accepting associations.
0x04	Active Scan found a PAN coordinator in a beacon-enabled network, which is not a supported feature.
0x05	Active Scan found a PAN, but the PAN ID doesn't match the configured PAN ID on the requesting end device and bit 0 of **A1** is not set to allow reassignment of PAN ID.
0x06	Active Scan found a PAN on a channel that does not match the configured channel on the requesting end device and bit 1 of **A1** is not set to allow reassignment of the channel.
0x0C	Association request failed to get a response.
0x13	End device is disassociated or is in the process of disassociating.
0xFF	Initialization time; no association status has been determined yet.

Parameter range

0 - 0x13 [read-only]

Default

N/A

DA (Force Disassociation)

This command applies to the XBee/XBee-PRO S2C 802.15.4 RF Module.

Causes the End Device to immediately disassociate from a Coordinator (if associated) and re-attempt to associate.

Parameter range

-

Default

-

FP (Force Poll)

This command applies to the XBee/XBee-PRO S2C 802.15.4 RF Module.

The **FP** command is deferred until changes are applied. This prevents indirect messages from arriving at the end device while it is operating in Command mode.

Parameter range

N/A

Default

N/A

AS (Active Scan)

This command applies to the XBee/XBee-PRO S2C 802.15.4 RF Module.

Sends a Beacon Request to a Broadcast address (**0xFFFF**) and Broadcast PAN (**0xFFFF**) on every channel in **SC**. **SD** determines the amount of time the device listens for Beacons on each channel. A PanDescriptor is created and returned for every Beacon received from the scan. Each PanDescriptor contains the following information:

CoordAddress (**SH** + **SL** parameters)<CR>

Note If **MY** on the coordinator is set less than 0xFFFF, the **MY** value is displayed.

CoordPanID (**ID** parameter)<CR>

CoordAddrMode <CR>

0x02 = 16-bit Short Address

0x03 = 64-bit Long Address

Channel (**CH** parameter) <CR>

SecurityUse<CR> - will always report 0x00

ACLEntry<CR> - will always report 0x00

SecurityFailure<CR> - will always report 0x00

SuperFrameSpec<CR> (2 bytes):

bit 15 - Association Permitted (MSB) - depending on bit 3 of A2 (Coordinator Association)

bit 14 - PAN Coordinator

bit 13 - Reserved

bit 12 - Battery Life Extension

bits 8-11 - Final CAP Slot

bits 4-7 - Superframe Order

bits 0-3 - Beacon Order

GtsPermit<CR>

RSSI<CR> (- RSSI is returned as -dBm)

TimeStamp<CR> (3 bytes)

<CR> (A carriage return <CR> is sent at the end of the **AS** command)

The Active Scan is capable of returning up to five PanDescriptors in a scan. The actual scan time on each channel is measured as:

Time = [(2 ^ (**SD** Parameter)) * 15.36] ms.

Total scan time is this time multiplied by the number of channels to be scanned (as determined by the **SC** parameter).

Refer to the scan table in SD (Scan Duration) to determine scan times. If using API Mode, no <CR>'s are returned in the response. For more information, see Operate in API mode. If no PANs are discovered during the scan, only one carriage return is printed.

Parameter range

0 - 6

Default

N/A

ED (Energy Detect)

This command applies to the XBee/XBee-PRO S2C 802.15.4 RF Module.

Starts an energy detect scan. This command accepts an argument to specify the time in milliseconds to scan all channels. The device loops through all the available channels until the time elapses. It returns the maximal energy on each channel, a comma follows each value, and the list ends with a carriage return. The values returned reflect the energy level that **ED** detects in -dBm units.

Parameter range

0 - 6

Default

N/A

EE (Encryption Enable)

This command applies to the XBee/XBee-PRO S2C 802.15.4 RF Module.

Enables or disables Advanced Encryption Standard (AES) encryption.

Set this command parameter the same on all devices in a network.

The firmware uses the 802.15.4 Default Security protocol and uses AES encryption with a 128-bit key. AES encryption dictates that all devices in the network use the same key, and that the maximum RF packet size is 95 bytes if Tx compatibility is enabled (you set bit 0 of **C8**). If **C8**, bit 0 is not set, see Maximum payload.

When encryption is enabled, the device always uses its 64-bit long address as the source address for RF packets. This does not affect how the **MY** (Source Address), **DH** (Destination Address High) and **DL** (Destination Address Low) parameters work.

If **MM** (MAC Mode) is set to 1 or 2 and **AP** (API Enable) parameter > 0:

> With encryption enabled and a 16-bit short address set, receiving devices can only issue RX (Receive) 64-bit indicators. This is not an issue when **MM** = 0 or 3.

If a device with a non-matching key detects RF data, but has an incorrect key:

When encryption is enabled, non-encrypted RF packets received are rejected and are not sent out the UART.

Parameter range

0 - 1

Parameter	Description
0	Encryption Disabled
1	Encryption Enabled

Default

0

KY (AES Encryption Key)

This command applies to the XBee/XBee-PRO S2C 802.15.4 RF Module.

Sets the 128-bit network security key value that the device uses for encryption and decryption.

This command is write-only. If you attempt to read **KY**, the device returns an **OK** status.

Set this command parameter the same on all devices in a network.

The entire payload of the packet is encrypted using the key and the CRC is computed across the ciphertext.

Parameter range

128-bit value (up to 16 bytes)

Default

0

NI (Node Identifier)

This command applies to the XBee/XBee-PRO S2C 802.15.4 RF Module.

Stores the node identifier string for a device, which is a user-defined name or description of the device. This can be up to 20 ASCII characters.

- XCTU prevents you from exceeding the string limit of 20 characters for this command. If you are using another software application to send the string, you can enter longer strings, but the software on the device returns an error.

Use the **ND** (Network Discovery) command with this string as an argument to easily identify devices on the network.

The **DN** command also uses this identifier.

Parameter range

A string of case-sensitive ASCII printable characters from 1 to 20 bytes in length. The string cannot start with the space character. A carriage return or a comma automatically ends the command.

Default

0x20 (an ASCII space character)

NP (Maximum Packet Payload Bytes)

This command applies to the XBee/XBee-PRO S2C 802.15.4 RF Module.

Reads the maximum number of RF payload bytes that you can send in a transmission.

NP is based on multiple factors including the length of the source address, the length of the destination address, the length of the APP header, and whether or not encryption is enabled.

For the purposes of this command, it always assumes a long destination address. This means that if you select a short destination address, you will be able to send up to **NP** + 6 bytes in a single packet.

Note **NP** returns a hexadecimal value. For example, if **NP** returns 0x66, this is equivalent to 102 bytes.

Parameter range

0 - 0xFFFF (bytes) [read-only]

Default

N/A

RF interfacing commands

The following AT commands are RF interfacing commands.

PL (TX Power Level)

This command applies to the XBee/XBee-PRO S2C 802.15.4 RF Module.

Sets or displays the power level at which the device transmits conducted power. Power levels are approximate.

For XBee-PRO, **PL**= **4** is calibrated and the remaining power levels are approximate. The device recalibrates its power setting every 15 seconds based on factory calibration settings and the current temperature.

For XBee, **PL** = **4**, **PM** = **1** is tested at the time of manufacturing. Other power levels are approximate. On channel 26, transmitter power will not exceed -5 dBm.

Parameter range

0 - 4

The following table shows the TX power versus the **PL** setting.

XBee modules

PL setting	PM setting	Channel(s)	TX power* (dBm)
4	1	11 to 25	8
4	0	11 to 25	5
3	1	11 to 25	6
3	0	11 to 25	3
2	1	11 to 25	4
2	0	11 to 25	1
1	1	11 to 25	2
1	0	11 to 25	-1
0	1	11 to 25	-2
0	0	11 to 25	-5
X	1	26	-5
X	0	26	-8
* Highest power level is tested during manufacturing. Other power levels are approximate.			

XBee-PRO modules

PL setting	Channel(s)	TX power* (dBm)
0	12 to 23	0

PL setting	Channel(s)	TX power* (dBm)
1	12 to 23	12
2	12 to 23	15
3	12 to 23	16
4	12 to 23	18
* Highest power level is tested during manufacturing. Other power levels are approximate.		

Default

4

PM (Power Mode)

This command applies to the XBee/XBee-PRO S2C 802.15.4 RF Module.

Set or read the power mode of the device. Enabling boost mode improves the receive sensitivity by 2dB and increase the transmit power by 3dB.

Parameter range

0 - 1

Setting	Meaning
0	Boost mode disabled
1	Boost mode enabled

Default

1

CA (CCA Threshold)

This command applies to the XBee/XBee-PRO S2C 802.15.4 RF Module.

Set or read the Clear Channel Assessment (CCA) threshold. Prior to transmitting a packet, the device performs a CCA to detect energy on the channel. If the device detects energy above the CCA threshold, it will not transmit the packet.

The **CA** parameter is measured in units of -dBm.

Note If device is operating in Europe, this value must be set to 0x34 to comply with EN 300 328 Listen Before Talk requirements. Alternatively the device can be set to **PL3** as explained in Europe (CE).

Parameter range

0x28 - 0x50

Default

0x2C (-44 decimal dBm)

Sleep commands

The following AT commands are sleep commands.

SM (Sleep Mode)

This command applies to the XBee/XBee-PRO S2C 802.15.4 RF Module.

Sets or displays the sleep mode of the device.

By default, Sleep Modes are disabled (**SM** = **0**) and the device remains in Idle/Receive mode. When in this state, the device is constantly ready to respond to either serial or RF activity.

Parameter range

0, 1, 4, 5

Parameter	Description
0	No sleep (disabled)
1	Pin sleep
2	Reserved
3	Reserved
4	Cyclic Sleep Remote
5	Cyclic Sleep Remote with pin wakeup

Default

0

ST (Time before Sleep)

This command applies to the XBee/XBee-PRO S2C 802.15.4 RF Module.

Sets or displays the wake time of the device.

The **ST** parameter is only valid for end devices configured with Cyclic Sleep settings (**SM** = 4 - 5) and for coordinators.

Coordinator and End Device **ST** values must be equal.

Parameter range

1 - 0xFFFF (x 1 ms)

Default

0x1388 (5 seconds)

SP (Cyclic Sleep Period)

This command applies to the XBee/XBee-PRO S2C 802.15.4 RF Module.

Sets and reads the duration of time that a remote device sleeps. After the cyclic sleep period is over, the device wakes and checks for data. If data is not present, the device goes back to sleep.

The **SP** parameter is only valid if you configure the end device to operate in Cyclic Sleep (**SM** = **4**-**5**). Coordinator and End Device **SP** values should always be equal.

To send direct messages on a coordinator, set **SP** = **0**.

End Device: **SP** determines the sleep period for cyclic sleeping remotes.

Coordinator: If non-zero, **SP** determines the time to hold an indirect message before discarding it. A Coordinator discards indirect messages after a period of (2.5 * **SP**).

Parameter range

0 - 0x15F900 (x 10 ms) (4 hours)

Default

0

DP (Disassociated Cyclic Sleep Period)

This command applies to the XBee/XBee-PRO S2C 802.15.4 RF Module.

Sets or displays the sleep period for cyclic sleeping remotes that are configured for Association but that are not associated to a Coordinator. For example, if a device is configured to associate and is configured as a Cyclic Sleep remote, but does not find a Coordinator, it sleeps for **DP** time before reattempting association.

Parameter range

1 - 0xFFFF

Default

0x3E8 (10 seconds)

SO (Sleep Options)

This command applies to the XBee/XBee-PRO S2C 802.15.4 RF Module.

Set or read the sleep options bit field of a device. This command is a bitmask.

You can set or clear any of the available sleep option bits.

Parameter range

0 - 0x3

Bit field:

Bit	Setting	Meaning	Description
0x01	0	Normal operations	A device configured for cyclic sleep will poll for data on waking
	1	Disable wakeup poll	A device configured for cyclic sleep will not poll for data on waking
0x02	0	Normal operations	A device configured in a sleep mode with ADC/DIO sampling enabled will automatically perform a sampling on wakeup
	1	Suppress sample on wakeup	A device configured in a sleep mode with ADC/DIO sampling enabled will not automatically sample on wakeup
Set all other option bits to 0.			

Default

0

Serial interfacing commands

The following AT commands are serial interfacing commands.

BD (Interface Data Rate)

This command applies to the XBee/XBee-PRO S2C 802.15.4 RF Module.

To request non-standard baud rates with values between 1200 b/s and 250,000 b/s (0x4B0 and 0x3D090), you can use the Serial Console toolbar in XCTU to configure the serial connection (if the console is connected), or click the **Connect** button (if the console is not yet connected).

When you send non-standard baud rates to a device, it stores the closest interface data rate represented by the number in the **BD** register. Read the **BD** command by sending **ATBD** without a parameter value, and the device returns the value stored in the **BD** register.

The RF data rate is not affected by the **BD** parameter.

Non-standard interface data rates

The firmware interprets any value from 0x4B0 through 0x3D090 as an actual baud rate. When the firmware cannot configure the exact rate specified, it configures the closest approximation to that rate. For example, to set a rate of 57600 b/s send the following command line: **ATBDE100**. Then, to find out the closest approximation, send **ATBD** to the console window. It sends back a response of 0xE0D1, which is the closest approximation to 57600 b/s attainable by the hardware.

Note When using XCTU, you can only set and read non-standard interface data rates using the XCTU **Terminal** tab. You cannot access non-standard rates through the **Modem Configuration** tab.

When you send the **BD** command with a non-standard interface data rate, the UART adjusts to accommodate the interface rate you request. In most cases, the clock resolution causes the stored **BD** parameter to vary from the sent parameter. Sending **ATBD** without an associated parameter value returns the value actually stored in the device's **BD** register.

The following table provides the parameters sent versus the parameters stored.

BD parameter sent (HEX)	Interface data rate (b/s)	BD parameter stored (HEX)
0	1200	0
4	19,200	4
7	115,200	7
E100	57,600	E0D1
1C200	115,200	1C2B8

Parameter range

Standard baud rates: 0x0 - 0x8

Parameter	Description
0x0	1200 b/s
0x1	2400 b/s
0x2	4800 b/s
0x3	9600 b/s
0x4	19200 b/s
0x5	38400 b/s
0x6	57600
0x7	115200 b/s
0x8	230400 b/s

Default

0x03 (9600 b/s)

NB (Parity)

This command applies to the XBee/XBee-PRO S2C 802.15.4 RF Module.

Set or read the serial parity settings for UART communications.

The device does not actually calculate and check the parity. It only interfaces with devices at the configured parity and stop bit settings.

Parameter range

0x00 - 0x04

Parameter	Description
0x00	No parity
0x01	Even parity
0x02	Odd parity
0x03	Mark parity (forced high)

Default

0x00

RO (Packetization Timeout)

This command applies to the XBee/XBee-PRO S2C 802.15.4 RF Module.

Set or read the number of character times of inter-character silence required before transmission begins when operating in Transparent mode.

RF transmission will also commence when the maximum payload—see Maximum payload—is received in the DI buffer.

Set **RO** to **0** to transmit characters as they arrive instead of buffering them into one RF packet.

Parameter range

0 - 0xFF (x character times)

Default

3

D7 (DIO7/CTS)

This command applies to the XBee/XBee-PRO S2C 802.15.4 RF Module.
Sets or displays the DIO7/$\overline{\text{CTS}}$ configuration (TH pin 12/SMT pin 25).

Parameter range

0, 1, 3 - 7

Parameter	Description
0	Disabled
1	$\overline{\text{CTS}}$ flow control
2	N/A
3	Digital input
4	Digital output, low
5	Digital output, high
6	RS-485 Tx enable, low Tx (0 V on transmit, high when idle)
7	RS-485 Tx enable high, high Tx (high on transmit, 0 V when idle)

Default

0x1

D6 (DIO6/RTS)

This command applies to the XBee/XBee-PRO S2C 802.15.4 RF Module.
Sets or displays the DIO6/$\overline{\text{RTS}}$ configuration (TH pin 16/SMT pin 29).

Parameter range

0, 1, 3 - 5

Parameter	Description
0	Disabled
1	$\overline{\text{RTS}}$ flow control
2	N/A
3	Digital input

Parameter	Description
4	Digital output, low
5	Digital output, high

Default

0

AP (API Enable)

This command applies to the XBee/XBee-PRO S2C 802.15.4 RF Module.

Set or read the API mode setting. The device can format the RF packets it receives into API frames and send them out the serial port.

When you enable API, you must format the serial data as API frames because Transparent operating mode is disabled.

Enables API Mode.

Parameter range

0 - 2

Parameter	Description
0	Transparent mode, API mode is off. All UART input and output is raw data and the device uses the **RO** parameter to delineate packets.
1	API Mode Without Escapes. The device packetizes all UART input and output data in API format, without escape sequences.
2	API Mode With Escapes. The device is in API mode and inserts escaped sequences to allow for control characters. When XON (0x11), XOFF (0x13), Escape (0x7D), and start delimiter 0x7E are data, these bytes are escaped so that they never appear in the data and so that they can always be interpreted with their special meanings.

Default

0

I/O settings commands

The following AT commands are I/O settings commands.

D0 (DIO0/AD0)

This command applies to the XBee/XBee-PRO S2C 802.15.4 RF Module.

Sets or displays the DIO0/AD0 configuration (TH pin 20/SMT pin 33).

Parameter range

0, 2 - 5

Parameter	Description
0	Disabled
0	Unmonitored digital input
1	N/A
2	ADC
3	Digital input
4	Digital output, low
5	Digital output, high

Default

0

D1 (DIO1/AD1)

This command applies to the XBee/XBee-PRO S2C 802.15.4 RF Module.
Sets or displays the DIO1/AD1 configuration (TH pin 19/SMT pin 32).

Parameter range

0 - 5

Parameter	Description
0	Disabled
1	Commissioning button
1	SPI_$\overline{\text{ATTN}}$ for the through-hole device
2	ADC
3	Digital input
4	Digital output, low
5	Digital output, high

Default

0

D2 (DIO2/AD2)

This command applies to the XBee/XBee-PRO S2C 802.15.4 RF Module.
Sets or displays the DIO2/AD2 configuration (TH pin 18/SMT pin 31).

Parameter range

0 - 5

Parameter	Description
0	Disabled
1	SPI_CLK for through-hole devices
2	ADC
3	Digital input
4	Digital output, low
5	Digital output, high

Default

0

D3 (DIO3/AD3)

This command applies to the XBee/XBee-PRO S2C 802.15.4 RF Module.
Sets or displays the DIO3/AD3 configuration (TH pin 17/SMT pin 30).

Parameter range

0 - 5

Parameter	Description
0	Disabled
0	Unmonitored digital input
1	SPI_$\overline{\text{SSEL}}$ for the through-hole device
1	SPI slave select
2	ADC
3	Digital input
4	Digital output, low
5	Digital output, high

Default

0

D4 (DIO4)

This command applies to the XBee/XBee-PRO S2C 802.15.4 RF Module.
Sets or displays the DIO4 configuration (TH pin 11/SMT pin 24).

Parameter range

0, 1, 3 - 5

Parameter	Description
0	Disabled
0	Unmonitored digital input
1	SPI_MOSI for the through-hole device
2	N/A
3	Digital input
4	Digital output, low
5	Digital output, high

Default

0

D5 (DIO5/ASSOCIATED_INDICATOR)

This command applies to the XBee/XBee-PRO S2C 802.15.4 RF Module.

Sets or displays the DIO5/ASSOCIATED_INDICATOR configuration (TH pin 15/SMT pin 28).

Parameter range

0, 1, 3 - 5

Parameter	Description
0	Disabled
1	Associate LED indicator - blinks when associated
2	N/A
3	Digital input
4	Digital output, default low
5	Digital output, default high

Default

1

D8 (DIO8/SLEEP_REQUEST)

This command applies to the XBee/XBee-PRO S2C 802.15.4 RF Module.

Sets or displays the DI8/$\overline{\text{DTR}}$/SLP_RQ configuration (TH pin 9/SMT pin 10).

This line is also used with Pin Sleep, but pin sleep ignores the **D8** configuration. It is always used to control pin sleep, regardless of configuration of **D8**.

Note When using Pin sleep, the internal pull up/down resistor is not used

Parameter range

0, 3

Parameter	Description
0	Disabled
1	N/A
2	N/A
3	Digital input
4	N/A
5	N/A

Default

0

P0 (RSSI/PWM0 Configuration)

This command applies to the XBee/XBee-PRO S2C 802.15.4 RF Module.

Sets or displays the RSSI/PWM0 configuration ().

This command enables the option of translating incoming data to a PWM so that the output can be translated back into analog form.

If the **IA** (I/O Input Address) parameter is correctly set and **P0** is configured as PWM0 output, incoming AD0 samples automatically modify the PWM0 value.

Parameter range

0 - 2

Parameter	Description
0	Disabled
1	RSSI PWM0 output
2	PWM0 output

Default

1

P1 (PWM1 Configuration)

This command applies to the XBee/XBee-PRO S2C 802.15.4 RF Module.

Sets or displays the PWM1 configuration (TH pin 7/SMT pin 8).

If **IA** (I/O Input Address) is correctly set and **P1** is configured as PWM1 output, incoming AD0 samples automatically modify the PWM1 value.

Parameter range

0, 2

Parameter	Description
0	Disabled
2	PWM1 output

Default

0

P2 (SPI_MISO)

This command applies to the XBee/XBee-PRO S2C 802.15.4 RF Module.

Sets or displays the SPI_MISO configuration (TH pin 4/SMT pin 17). This only applies to through-hole devices.

Parameter range

0 - 1

Parameter	Description
0	Disabled
1	SPI_MISO

Default

0

M0 (PWM0 Duty Cycle)

This command applies to the XBee/XBee-PRO S2C 802.15.4 RF Module.

The duty cycle of the PWM0 line (TH pin 6/SMT pin 7).

Use the **P0** command to configure the line as a PWM output.

If the **IA** (I/O Input Address) parameter is correctly set and **P0** is configured as PWM0 output, incoming AD0 samples automatically modify the PWM0 value.

Before setting the line as an output:

1. Enable PWM0 output (**P0** = **2**).
2. Apply settings (use **CN** or **AC**).

To configure the duty cycle of PWM0:

The PWM period is 64 µs and there are 0x03FF (1023 decimal) steps within this period. When **M0** = **0** (0% PWM), 0x01FF (50% PWM), 0x03FF (100% PWM), and so forth.

Parameter range

0 - 0x3FF

Default

0

M1 (PWM1 Duty Cycle)

This command applies to the XBee/XBee-PRO S2C 802.15.4 RF Module.
The duty cycle of the PWM1 line (TH pin 7/SMT pin 8).
Use the **P1** command to configure the line as a PWM output.
Before setting the line as an output:

1. Enable PWM1 output (**P1** = **2**).
2. Apply settings (use **CN** or **AC**)

Parameter range

0 - 0x3FF

Default

0

P5 (SPI_MISO)

This command applies to the XBee/XBee-PRO S2C 802.15.4 RF Module.
Sets or displays the SPI_MISO configuration.
This only applies to surface-mount devices.

Parameter range

0, 1

Parameter	Description
0	Disabled
1	SPI_MISO

Default

1

P6 (SPI_MOSI Configuration)

This command applies to the XBee/XBee-PRO S2C 802.15.4 RF Module.
Sets or displays the SPI_MOSI configuration.
This only applies to surface-mount devices.

Parameter range

0, 1

Parameter	Description
0	Disabled
1	SPI_MOSI

Default

1

P7 (SPI_SSEL)

This command applies to the XBee/XBee-PRO S2C 802.15.4 RF Module.
Sets or displays the SPI_$\overline{\text{SSEL}}$ configuration.
This only applies to surface-mount devices.

Parameter range

1, 2

Parameter	Description
0	Disabled
1	SPI_$\overline{\text{SSEL}}$

Default

1

P8 (SPI_SCLK)

This command applies to the XBee/XBee-PRO S2C 802.15.4 RF Module.
Sets or displays the DIO18/SPI_CLK configuration.
This only applies to surface-mount devices.

Parameter range

1, 2

Parameter	Description
0	Disabled
1	SPI_SCLK

Default

1

P9 (SPI_ATTN)

This command applies to the XBee/XBee-PRO S2C 802.15.4 RF Module.
Sets or displays the SPI_$\overline{\text{ATTN}}$ configuration (pin 12).
This only applies to surface-mount devices.

Parameter range

1, 2

Parameter	Description
0	Disabled
1	SPI_$\overline{\text{ATTN}}$

Default

1

PR (Pull-up/Down Resistor Enable)

This command applies to the XBee/XBee-PRO S2C 802.15.4 RF Module.
The bit field that configures the internal pull-up/down resistor status for the I/O lines.

- If you set a **PR** bit to 1, it enables the pull-up/down resistor
- If you set a **PR** bit to 0, it specifies no internal pull-up/down resistor.

The **PD** (Pull Direction) parameter determines the direction of the internal pull-up/down resistor.

Note When using Pin sleep, the internal pull up/down resistor is not used

PR and **PD** only affect lines that are configured as digital inputs or disabled.
The following table defines the bit-field map for **PR** and **PD** commands.

Bit	I/O line
0	DIO4 (pin 11)
1	AD3/DIO3 (pin 17)
2	AD2/DIO2 (pin 18)
3	AD1/DIO1 (pin 19)
4	AD0/DIO0 (pin 20)
5	$\overline{\text{RTS}}$/DIO6 (pin 16)
6	DI8/SLEEP_RQ (pin 9)
7	DIN/CONFIG (pin 3)

Parameter range

0 - 0xFF (bit field)

Default

0xFF

Example

Sending the command **ATPR 6F** turn bits 0, 1, 2, 3, 5 and 6 ON, and bits 4 and 7 OFF. The binary equivalent of **0x6F** is **01101111**. Bit 0 is the last digit in the bit field.

PD (Pull Up/Down Direction)

This command applies to the XBee/XBee-PRO S2C 802.15.4 RF Module.

The resistor pull direction bit field (1 = pull-up, 0 = pull-down) for corresponding I/O lines that are set by the **PR** command.

See PR (Pull-up/Down Resistor Enable) for the bit mappings.

Parameter range

0x0 - 0xFF

Default

0xFF

IU (I/O Output Enable)

This command applies to the XBee/XBee-PRO S2C 802.15.4 RF Module.

The **IU** command disables or enables I/O UART output. When enabled (**IU** = 1), received I/O line data packets are sent out the UART. The data is sent using an API frame regardless of the current **AP** parameter value.

Parameter range

0 - 1

Parameter	Description
0	Disabled
1	Enabled

Default

1

IT (Samples before TX)

This command applies to the XBee/XBee-PRO S2C 802.15.4 RF Module.

Sets or displays the number of samples to collect before transmitting data. The maximum number of samples is dependent on the number of enabled I/O lines and the maximum payload available.

If **IT** is set to a number too big to fit in the maximum payload, it is reduced such that it will fit. A query of **IT** after setting it reports the actual number of samples in a packet.

Parameter range

0x1 - 0xFF

Default

1

IS (Force Sample)

This command applies to the XBee/XBee-PRO S2C 802.15.4 RF Module.

Forces a read of all enabled digital and analog input lines. The data is returned through the UART or SPI.

When operating in Transparent mode (**AP** = 0), the data is returned in the following format:

All bytes are converted to ASCII:

number of samples<CR>

channel mask<CR>

DIO data<CR> (If DIO lines are enabled)

ADC channel Data<CR> (This will repeat for every enabled ADC channel)

<CR> (end of data noted by extra <CR>)

When operating in API mode (**AP** = 1), the command immediately returns an **OK** response. The data follows in the normal API format for DIO data.

Parameter range

N/A

Default

N/A

IO (Digital Output Level)

This command applies to the XBee/XBee-PRO S2C 802.15.4 RF Module.

Sets digital output levels. This allows DIO lines setup as outputs to be changed through Command mode.

Parameter range

8-bit bit map; each bit represents the level of an I/O line set up as an output

Default

N/A

IC (DIO Change Detect)

This command applies to the XBee/XBee-PRO S2C 802.15.4 RF Module.

Set or read the digital I/O pins to monitor for changes in the I/O state.

Each bit enables monitoring of DIO0 - DIO7 for changes. If detected, data is transmitted with DIO data only. Any samples queued waiting for transmission is sent first.

Set unused bits to 0.

Parameter range

0 - 0xFFFF (bit field)

Default

0

IR (Sample Rate)

This command applies to the XBee/XBee-PRO S2C 802.15.4 RF Module.

Set or read the I/O sample rate to enable periodic sampling. When set, this parameter causes the device to sample all enabled DIO and ADC at a specified interval.

To enable periodic sampling, set **IR** to a non-zero value, and enable the analog or digital I/O functionality of at least one device pin (see D0 (DIO0/AD0) -D8 (DIO8/SLEEP_REQUEST), P0 (RSSI/PWM0 Configuration) -P2 (SPI_MISO).

WARNING! If you set **IR** to 1 or 2, the device will not keep up and many samples will be lost.

Parameter range

0 - 0xFFFF (x 1 ms)

Default

0

RP (RSSI PWM Timer)

This command applies to the XBee/XBee-PRO S2C 802.15.4 RF Module.

The PWM timer expiration in 0.1 seconds. **RP** sets the duration of pulse width modulation (PWM) signal output on the RSSI pin. The signal duty cycle updates with each received packet and shuts off when the timer expires.

When **RP** = **0xFF**, the output is always on.

Parameter range

0 - 0xFF (x 100 ms)

Default

0x28 (four seconds)

I/O line passing commands

The following AT commands are I/O line passing commands.

I/O Line Passing allows the digital and analog inputs of a remote device to affect the corresponding outputs of the local device.

You can perform Digital Line Passing on any of the Digital I/O lines. Digital Inputs directly map to Digital Outputs of each digital pin.

Analog Line Passing can be performed only on the first two ADC lines:

- ADC0 corresponds with PWM0
- ADC1 corresponds with PWM1

IA (I/O Input Address)

This command applies to the XBee/XBee-PRO S2C 802.15.4 RF Module.

The source address of the device to which outputs are bound. Setting all bytes to 0xFF disables I/O line passing. Setting **IA** to 0xFFFF allows any I/O packet addressed to this device (including broadcasts) to change the outputs.

The source address of the device to which outputs are bound. If an I/O sample is received from the address specified, any pin that is configured as a digital output or PWM changes its state to match that of the I/O sample.

Set **IA** to 0xFFFFFFFFFFFFFFFF to disable I/O line passing.

Set **IA** to 0xFFFF to allow any I/O packet addressed to this device (including broadcasts) to change the outputs.

Parameter range

0 - 0xFFFF FFFF FFFF FFFF

Default

0xFFFFFFFFFFFFFFFF (I/O line passing disabled)

T0 (D0 Timeout)

This command applies to the XBee/XBee-PRO S2C 802.15.4 RF Module.

Specifies how long pin D0 holds a given value before it reverts to configured value. If set to 0, there is no timeout.

Parameter range

0 - 0xFF (x 100 ms)

Default

0xFF

T1 (D1 Output Timeout)

This command applies to the XBee/XBee-PRO S2C 802.15.4 RF Module.

Specifies how long pin D1 holds a given value before it reverts to configured value. If set to 0, there is no timeout.

Parameter range

0 - 0xFF (x 100 ms)

Default

0xFF

T2 (D2 Output Timeout)

This command applies to the XBee/XBee-PRO S2C 802.15.4 RF Module.

Specifies how long pin D2 holds a given value before it reverts to configured value. If set to 0, there is no timeout.

Parameter range

0 - 0xFF (x 100 ms)

Default

0xFF

T3 (D3 Output Timeout)

This command applies to the XBee/XBee-PRO S2C 802.15.4 RF Module.

Specifies how long pin D3 holds a given value before it reverts to configured value. If set to 0, there is no timeout.

Parameter range

0 - 0xFF (x 100 ms)

Default

0xFF

T4 (D4 Output Timeout)

This command applies to the XBee/XBee-PRO S2C 802.15.4 RF Module.

Specifies how long pin D4 holds a given value before it reverts to configured value. If set to 0, there is no timeout.

Parameter range

0 - 0xFF (x 100 ms)

Default

0xFF

T5 (D5 Output Timeout)

This command applies to the XBee/XBee-PRO S2C 802.15.4 RF Module.

Specifies how long pin D5 holds a given value before it reverts to configured value. If set to 0, there is no timeout.

Parameter range

0 - 0xFF (x 100 ms)

Default

0xFF

T6 (D6 Output Timeout)

This command applies to the XBee/XBee-PRO S2C 802.15.4 RF Module.

Specifies how long pin D6 holds a given value before it reverts to configured value. If set to 0, there is no timeout.

Parameter range

0 - 0xFF (x 100 ms)

Default

0xFF

T7 (D7 Output Timeout)

This command applies to the XBee/XBee-PRO S2C 802.15.4 RF Module.

Specifies how long pin D7 holds a given value before it reverts to configured value. If set to 0, there is no timeout.

Parameter range

0 - 0xFF (x 100 ms)

Default

0xFF

PT (PWM Output Timeout)

This command applies to the XBee/XBee-PRO S2C 802.15.4 RF Module.

Specifies how long both PWM outputs (**P0**, **P1**) output a given PWM signal before it reverts to the configured value (**M0**/**M1**). If set to 0, there is no timeout. This timeout only affects these pins when they are configured as PWM output.

Parameter range

0 - 0xFF (x 100 ms)

Default

0xFF

Diagnostic commands

The following AT commands are diagnostic commands. Diagnostic commands are typically volatile and will not persist across a power cycle.

VR (Firmware Version)

This command applies to the XBee/XBee-PRO S2C 802.15.4 RF Module.

Reads the firmware version on a device.

Firmware version numbers have four significant digits. The reported number shows three or four numbers in hexadecimal notation. A version is reported as **ABCD**. Digits ABC are the main release number and D is the revision number from the main release. **D** is not required and if it is not present, a zero is assumed for **D**. **B** is a variant designator.

Parameter range

0x2000 - 0x20FF

Default

Set in the factory

VL (Version Long)

This command applies to the XBee/XBee-PRO S2C 802.15.4 RF Module.

Shows detailed version information including the application build date and time.

Parameter range

N/A

Default

N/A

HV (Hardware Version)

This command applies to the XBee/XBee-PRO S2C 802.15.4 RF Module.

Display the hardware version number of the device.

Parameter range

0 - 0xFFFF [read-only]

Default

Set in firmware

DB (Last Packet RSSI)

This command applies to the XBee/XBee-PRO S2C 802.15.4 RF Module.

Reports the RSSI in -dBm of the last received RF data packet. **DB** returns a hexadecimal value for the -dBm measurement.

For example, if **DB** returns 0x60, then the RSSI of the last packet received was -96 dBm.

If the XBee/XBee-PRO S2C 802.15.4 RF Module has been reset and has not yet received a packet, **DB** reports **0**.

This value is volatile—the value does not persist in the device's memory after a power-up sequence.

Parameter range

0 - 0xFF [read-only]

Default

N/A

EC (CCA Failures)

This command applies to the XBee/XBee-PRO S2C 802.15.4 RF Module.

Resets or displays the count of Clear Channel Assessment (CCA) failures. This register increments when the device does not transmit a packet because it detected energy above the CCA threshold level set with **CA** command. This count saturates at its maximum value. Set the count to zero to reset the count.

Parameter range

0 - 0xFFFF

Default

N/A

EA (ACK Failures)

This command applies to the XBee/XBee-PRO S2C 802.15.4 RF Module.

Resets or displays the count of acknowledgment failures. This register increments when the device expires the retries without receiving an ACK on a packet transmission. This count saturates at its maximum value. Set the count to zero to reset the count.

Parameter range

0 - 0xFFFF

Default

N/A

DD (Device Type Identifier)

This command applies to the XBee/XBee-PRO S2C 802.15.4 RF Module.

Stores the Digi device type identifier value. Use this value to differentiate between multiple XBee devices.

Parameter range

0 - 0xFFFFFFFF

Default

0x10000

Command mode options

The following commands are Command mode option commands.

CT (Command mode Timeout)

This command applies to the XBee/XBee-PRO S2C 802.15.4 RF Module.

Sets or displays the Command mode timeout parameter. If a device does not receive any valid commands within this time period, it returns to Idle mode from Command mode.

Parameter range

2 - 0x1770 (x 100 ms)

Default

0x64 (10 seconds)

CN (Exit Command mode)

This command applies to the XBee/XBee-PRO S2C 802.15.4 RF Module.

Exits Command mode and returns the product family to Idle mode.

Parameter range

N/A

Default

N/A

AC (Apply Changes)

This command applies to the XBee/XBee-PRO S2C 802.15.4 RF Module.

Immediately applies new settings without exiting Command mode.

Applying changes means that the device is re-initialized based on changes made to its parameter values. Once changes are applied, the device immediately operates according to the new parameter values.

This behavior is in contrast to issuing the **WR** (Write) command. The **WR** command saves parameter values to non-volatile memory, but the device still operates according to previously saved values until the device is rebooted or the **CN** (Exit AT Command Mode) or **AC** commands are issued. For more information, see Queue Local AT Command Request - 0x09.

Parameter range

N/A

Default

N/A

GT (Guard Times)

This command applies to the XBee/XBee-PRO S2C 802.15.4 RF Module.

Set the required period of silence before and after the command sequence characters of the Command mode sequence (**GT** + **CC** + **GT**). The period of silence prevents inadvertently entering Command mode.

Parameter range

0x2 - 0xCE4 (x 1 ms)

Default

0x3E8 (one second)

CC (Command Character)

This command applies to the XBee/XBee-PRO S2C 802.15.4 RF Module.

The character value the device uses to enter Command mode.

The default value (**0x2B**) is the ASCII code for the plus (**+**) character. You must enter it three times within the guard time to enter Command mode. To enter Command mode, there is also a required period of silence before and after the command sequence characters of the Command mode sequence (**GT** + **CC** + **GT**). The period of silence prevents inadvertently entering Command mode.

Parameter range

0 - 0xFF

Default

0x2B (the ASCII plus character: **+**)

Operate in API mode

API mode overview 124
API frame specifications 124
Escaped characters in API frames 127
Frame descriptions 128

API mode overview

As an alternative to Transparent operating mode, you can use API operating mode. API mode provides a structured interface where data is communicated through the serial interface in organized packets and in a determined order. This enables you to establish complex communication between devices without having to define your own protocol. The API specifies how commands, command responses and device status messages are sent and received from the device using the serial interface or the SPI interface.

We may add new frame types to future versions of firmware, so build the ability to filter out additional API frames with unknown frame types into your software interface.

API frame specifications

The firmware supports two API operating modes: without escaped characters and with escaped characters. Use the **AP** command to enable either mode. To configure a device to one of these modes, set the following **AP** parameter values:

AP command setting	Description
AP = 0	Transparent operating mode, UART serial line replacement with API modes disabled. This is the default option.
AP = 1	API operation.
AP = 2	API operation with escaped characters (only possible on UART).

The API data frame structure differs depending on what mode you choose.

The firmware silently discards any data it receives prior to the start delimiter. If the device does not receive the frame correctly or if the checksum fails, the device discards the frame.

API operation (AP parameter = 1)

We recommend this API mode for most applications. The following table shows the data frame structure when you enable this mode:

Frame fields	Byte	Description
Start delimiter	1	0x7E
Length	2 - 3	Most Significant Byte, Least Significant Byte
Frame data	4 - n	API-specific structure
Checksum	n + 1	1 byte

API operation-with escaped characters (AP parameter = 2)

Set API to 2 to allow escaped control characters in the API frame. Due to its increased complexity, we only recommend this API mode in specific circumstances. API 2 may help improve reliability if the serial interface to the device is unstable or malformed frames are frequently being generated.

When operating in API 2, if an unescaped 0x7E byte is observed, it is treated as the start of a new API frame and all data received prior to this delimiter is silently discarded. For more information on using this API mode, refer to the following knowledge base article:

http://knowledge.digi.com/articles/Knowledge_Base_Article/Escaped-Characters-and-API-Mode-2

The following table shows the structure of an API frame with escaped characters:

Frame fields	Byte	Description	
Start delimiter	1	0x7E	
Length	2 - 3	Most Significant Byte, Least Significant Byte	Characters escaped if needed
Frame data	4 - n	API-specific structure	
Checksum	n + 1	1 byte	

Escape characters

When sending or receiving a UART data frame, you must escape (flag) specific data values so they do not interfere with the data frame sequencing. To escape an interfering data byte, insert 0x7D and follow it with the byte to be escaped XOR'd with 0x20. If not escaped, 0x11 and 0x13 are sent as is.

Data bytes that need to be escaped:

- 0x7E – Frame delimiter
- 0x7D – Escape
- 0x11 – XON
- 0x13 – XOFF

Example - Raw UART data frame (before escaping interfering bytes): 0x7E 0x00 0x02 0x23 0x11 0xCB

0x11 needs to be escaped which results in the following frame: 0x7E 0x00 0x02 0x23 0x7D 0x31 0xCB

Note In the previous example, the length of the raw data (excluding the checksum) is 0x0002 and the checksum of the non-escaped data (excluding frame delimiter and length) is calculated as:
0xFF - (0x23 + 0x11) = (0xFF - 0x34) = 0xCB.

Start delimiter

This field indicates the beginning of a frame. It is always 0x7E. This allows the device to easily detect a new incoming frame.

Length

The length field specifies the total number of bytes included in the frame's data field. Its two-byte value excludes the start delimiter, the length, and the checksum.

Frame data

This field contains the information that a device receives or will transmit. The structure of frame data depends on the purpose of the API frame:

Start delimiter	Length		Frame data								Checksum
			Frame type	Data							
1	2	3	4	5	6	7	8	9	...	n	n+1
0x7E	MSB	LSB	API frame type	Data							Single byte

- **Frame type** is the API frame type identifier. It determines the type of API frame and indicates how the Data field organizes the information.
- **Data** contains the data itself. This information and its order depend on the what type of frame that the Frame type field defines.

Checksum

Checksum is the last byte of the frame and helps test data integrity. It is calculated by taking the hash sum of all the API frame bytes that came before it, except the first three bytes (start delimiter and length).

The device does not process frames sent through the serial interface with incorrect checksums, and ignores their data.

Calculate and verify checksums

To calculate the checksum of an API frame:

1. Add all bytes of the packet, except the start delimiter 0x7E and the length (the second and third bytes).
2. Keep only the lowest 8 bits from the result.
3. Subtract this quantity from 0xFF.

To verify the checksum of an API frame:

1. Add all bytes including the checksum; do not include the delimiter and length.
2. If the checksum is correct, the last two digits on the far right of the sum equal 0xFF.

Example

Consider the following sample data packet: **7E 00 0A 01 01 50 01 00 48 65 6C 6C 6F B8**

Byte(s)	Description
7E	Start delimiter
00 0A	Length bytes
01	API identifier
01	API frame ID
50 01	Destination address low
00	Option byte

Byte(s)	Description
48 65 6C 6C 6F	Data packet
B8	Checksum

To calculate the check sum you add all bytes of the packet, excluding the frame delimiter **7E** and the length (the second and third bytes):

7E 00 0A 01 01 50 01 00 48 65 6C 6C 6F B8

Add these hex bytes:

01 + 01 + 50 + 01 + 00 + 48 + 65 + 6C + 6C + 6F = 247

Now take the result of 0x247 and keep only the lowest 8 bits which, in this example, is 0x47 (the two far right digits). Subtract 0x47 from 0xFF and you get 0xB8 (0xFF - 0x47 = 0xB8). 0xB8 is the checksum for this data packet.

If an API data packet is composed with an incorrect checksum, the XBee/XBee-PRO S2C 802.15.4 RF Module will consider the packet invalid and will ignore the data.

To verify the check sum of an API packet add all bytes including the checksum (do not include the delimiter and length) and if correct, the last two far right digits of the sum will equal FF.

01 + 01 + 50 + 01 + 00 + 48 + 65 + 6C + 6C + 6F + B8 = 2FF

Escaped characters in API frames

If operating in API mode with escaped characters (**AP** parameter = 2), when sending or receiving a serial data frame, specific data values must be escaped (flagged) so they do not interfere with the data frame sequencing. To escape an interfering data byte, insert 0x7D and follow it with the byte to be escaped (XOR'ed with 0x20).

The following data bytes need to be escaped:

- 0x7E: start delimiter
- 0x7D: escape character
- 0x11: XON
- 0x13: XOFF

To escape a character:

1. Insert 0x7D (escape character).
2. Append it with the byte you want to escape, XOR'ed with 0x20.

In API mode with escaped characters, the length field does not include any escape characters in the frame and the firmware calculates the checksum with non-escaped data.

Frame descriptions

The following sections describe the API frames.

64-bit Transmit Request - 0x00

Response frame: Transmit Status - 0x89

Description

This frame type is used to send serial payload data as an RF packet to a remote device with a corresponding 64-bit IEEE address.

Note This frame format is deprecated and should only be used by customers who require compatibility with legacy Digi RF products. For new designs, we encourage you to use Transmit Request frame - 0x10 to initiate API transmissions.

Format

The following table provides the contents of the frame. For details on frame structure, see API frame format.

Offset	Size	Frame Field	Description
0	8-bit	Start Delimiter	Indicates the start of an API frame.
1	16-bit	Length	Number of bytes between the length and checksum.
3	8-bit	**Frame type**	64-bit Transmit Request - **0x00**
4	8-bit	**Frame ID**	Identifies the data frame for the host to correlate with a subsequent response. If set to **0**, the device will not emit a response frame.
5	64-bit	**Destination address**	Set to the 64-bit IEEE address of the destination device. If set to **0x000000000000FFFF**, the broadcast address is used.
13	8-bit	**Options**	A bit field of options that affect the outgoing transmission: ▪ **Bit 0**: Disable MAC ACK [**0x01**] ▪ Bit 1: Reserved (set to 0) ▪ **Bit 2**: Send packet with Broadcast PAN ID [**0x04**] • 802.15.4 firmwares only **Note** Option values may be combined. Set all unused bits to 0.
14-n	variable	**RF data**	The serial data to be sent to the destination. Use **NP** to query the maximum payload size that can be supported based on current settings.
EOF	8-bit	Checksum	0xFF minus the 8-bit sum of bytes from offset 3 to this byte (between length and checksum).

Examples

Each example is written without escapes (**AP** = **1**) and all bytes are represented in hex format. For brevity, the start delimiter, length, and checksum fields have been excluded.

64-bit unicast

Sending a unicast transmission to a device with the 64-bit address of **0013A20012345678** with the serial data "**TxData**".

The corresponding Transmit Status - 0x89 response with a matching Frame ID will indicate whether the transmission succeeded.

```
7E 00 11 00 52 00 13 A2 00 12 34 56 78 00 54 78 44 61 74 61 9E
```

Frame type	Frame ID	64-bit dest address	Tx options	RF data
0x00	0x52	0x0013A200 12345678	0x00	0x547844617461
Input	*Matches response*			*"TxData"*

64-bit broadcast

Sending a broadcast transmission of the serial data "**Broadcast**" and suppressing the corresponding response by setting Frame ID to **0**.

```
7E 00 14 00 00 00 00 00 00 00 00 FF FF 00 42 72 6F 61 64 63 61 73 74 6E
```

Frame type	Frame ID	64-bit dest address	Tx options	RF data
0x00	0x00	0x00000000 0000FFFF	0x00	0x42726F616463617374
Input	*Suppress response*	*Broadcast address*		*"Broadcast"*

16-bit Transmit Request - 0x01

Response frame: Transmit Status - 0x89

Description

This frame type is used to send serial payload data as an RF packet to a remote device with a corresponding 16-bit network address.

Note This frame format is deprecated and should only be used by customers who require compatibility with legacy Digi RF products. For new designs, we encourage you to use Transmit Request - 0x10 to initiate API transmissions.

Format

The following table provides the contents of the frame. For details on frame structure, see API frame format.

Offset	Size	Frame Field	Description
0	8-bit	Start Delimiter	Indicates the start of an API frame.
1	16-bit	Length	Number of bytes between the length and checksum.
3	8-bit	**Frame type**	16-bit Transmit Request - **0x01**
4	8-bit	**Frame ID**	Identifies the data frame for the host to correlate with a subsequent response. If set to **0**, the device will not emit a response frame.
5	16-bit	**Destination address**	Set to the 16-bit network address of the destination device. If set to **0xFFFF**, the broadcast address is used.
7	8-bit	**Options**	A bit field of options that affect the outgoing transmission: ■ **Bit 0**: Disable MAC ACK [**0x01**] ■ Bit 1: Reserved (set to 0) ■ **Bit 2**: Send packet with Broadcast PAN ID [**0x04**] • 802.15.4 firmwares only **Note** Option values may be combined. Set all unused bits to 0.
8-n	variable	**RF data**	The serial data to be sent to the destination. Use **NP** to query the maximum payload size that can be supported based on current settings.
EOF	8-bit	Checksum	0xFF minus the 8-bit sum of bytes from offset 3 to this byte (between length and checksum).

Examples

Each example is written without escapes (**AP** = **1**) and all bytes are represented in hex format. For brevity, the start delimiter, length, and checksum fields have been excluded.

16-bit unicast

Sending a unicast transmission to a device with the 16-bit address of **1234** with the serial data "**TxData**".

The corresponding Transmit Status - 0x89 response with a matching Frame ID will indicate whether the transmission succeeded.

```
7E 00 0B 01 87 12 34 00 54 78 44 61 74 61 EB
```

Frame type	Frame ID	16-bit dest address	Tx options	RF data
0x01	0x87	0x1234	0x00	0x547844617461
Input	*Matches response*			*"TxData"*

16-bit broadcast

Sending a broadcast transmission of the serial data "**Broadcast**" and suppressing the corresponding response by setting Frame ID to **0**.

```
7E 00 0E 01 00 FF FF 00 42 72 6F 61 64 63 61 73 74 6D
```

Frame type	Frame ID	16-bit dest address	Tx options	RF data
0x01	0x00	0xFFFF	0x00	0x42726F616463617374
Input	*Suppress response*	*Broadcast address*		*"Broadcast"*

Local AT Command Request - 0x08

Response frame: Local AT Command Response - 0x88

Description

This frame type is used to query or set command parameters on the local device. Any parameter that is set with this frame type will apply the change immediately. If you wish to queue multiple parameter changes and apply them later, use the Queue Local AT Command Request - 0x09 instead.

When querying parameter values, this frame behaves identically to Queue Local AT Command Request - 0x09: You can query parameter values by sending this frame with a command but no parameter value field—the two-byte AT command is immediately followed by the frame checksum. When an AT command is queried, a Local AT Command Response - 0x88 frame is populated with the parameter value that is currently set on the device. The Frame ID of the 0x88 response is the same one set by the command in the 0x08 request frame.

Format

The following table provides the contents of the frame. For details on frame structure, see API frame format.

Offset	Size	Frame Field	Description
0	8-bit	Start Delimiter	Indicates the start of an API frame.
1	16-bit	Length	Number of bytes between the length and checksum.
3	8-bit	**Frame type**	Local AT Command Request - **0x08**
4	8-bit	**Frame ID**	Identifies the data frame for the host to correlate with a subsequent response. If set to**0**, the device will not emit a response frame.
5	16-bit	**AT command**	The two ASCII characters that identify the AT Command.
7-n	variable	**Parameter value (optional)**	If present, indicates the requested parameter value to set the given register. If no characters are present, it queries the current parameter value and returns the result in the response.
EOF	8-bit	Checksum	0xFF minus the 8-bit sum of bytes from offset 3 to this byte (between length and checksum).

Examples

Each example is written without escapes (**AP** = **1**) and all bytes are represented in hex format. For brevity, the start delimiter, length, and checksum fields have been excluded.

Set the local command parameter

Set the **NI** string of the radio to "**End Device**".

The corresponding Local AT Command Response - 0x88 with a matching Frame ID will indicate whether the parameter change succeeded.

```
7E 00 0E 08 A1 4E 49 45 6E 64 20 44 65 76 69 63 65 38
```

Frame type	Frame ID	AT command	Parameter value
0x08	0xA1	0x4E49	0x456E6420446576696365
Request	*Matches response*	*"NI"*	*"End Device"*

Query local command parameter

Query the temperature of the module—**TP** command.

The corresponding Local AT Command Response - 0x88 with a matching Frame ID will return the temperature value.

```
7E 00 04 08 17 54 50 3C
```

Frame type	Frame ID	AT command	Parameter value
0x08	0x17	0x5450	(omitted)
Request	*Matches response*	*"TP"*	*Query the parameter*

Queue Local AT Command Request - 0x09

Response frame: Local AT Command Response - 0x88

Description

This frame type is used to query or set queued command parameters on the local device. In contrast to Local AT Command Request - 0x08, this frame queues new parameter values and does not apply them until you either:

- Issue a Local AT Command using the 0x08 frame
- Issue an **AC** command—queued or otherwise

When querying parameter values, this frame behaves identically to Local AT Command Request - 0x08: You can query parameter values by sending this frame with a command but no parameter value field—the two-byte AT command is immediately followed by the frame checksum. When an AT command is queried, a Local AT Command Response - 0x88 frame is populated with the parameter value that is currently set on the device. The Frame ID of the 0x88 response is the same one set by the command in the 0x09 request frame.

Format

The following table provides the contents of the frame. For details on frame structure, see API frame specifications.

Offset	Size	Frame Field	Description
0	8-bit	Start Delimiter	Indicates the start of an API frame.
1	16-bit	Length	Number of bytes between the length and checksum.
3	8-bit	**Frame type**	Queue Local AT Command Request - **0x09**
4	8-bit	**Frame ID**	Identifies the data frame for the host to correlate with a subsequent response. If set to**0**, the device will not emit a response frame.
5	16-bit	**AT command**	The two ASCII characters that identify the AT Command.
7-n	variable	**Parameter value (optional)**	If present, indicates the requested parameter value to set the given register at a later time. If no characters are present, it queries the current parameter value and returns the result in the response.
EOF	8-bit	Checksum	0xFF minus the 8-bit sum of bytes from offset 3 to this byte (between length and checksum).

Examples

Each example is written without escapes (**AP** = **1**) and all bytes are represented in hex format. For brevity, the start delimiter, length, and checksum fields have been excluded.

Queue setting local command parameter

Set the UART baud rate to 115200, but do not apply changes immediately.

The device will continue to operate at the current baud rate until the change is applied with a subsequent **AC** command.

The corresponding Local AT Command Response - 0x88 with a matching Frame ID will indicate whether the parameter change succeeded.

```
7E 00 05 09 53 42 44 07 16
```

Frame type	Frame ID	AT command	Parameter value
0x09	0x53	0x4244	0x07
Request	*Matches response*	*"BD"*	*7 = 115200 baud*

Query local command parameter

Query the temperature of the module (**TP** command).

The corresponding Local AT Command Response - 0x88 frame with a matching Frame ID will return the temperature value.

```
7E 00 04 09 17 54 50 3B
```

Frame type	Frame ID	AT command	Parameter value
0x09	0x17	0x5450	(omitted)
Request	*Matches response*	*"TP"*	*Query the parameter*

Remote AT Command Request - 0x17

Response frame: Remote AT Command Response- 0x97

Description

This frame type is used to query or set AT command parameters on a remote device.

For parameter changes on the remote device to take effect, you must apply changes, either by setting the **Apply Changes** options bit, or by sending an **AC** command to the remote.

When querying parameter values you can query parameter values by sending this framewith a command but no parameter value field—the two-byte AT command is immediately followed by the frame checksum. When an AT command is queried, a Remote AT Command Response- 0x97 frame is populated with the parameter value that is currently set on the device. The Frame ID of the 0x97 response is the same one set by the command in the 0x17 request frame.

Note Remote AT Command Requests should only be issued as unicast transmissions to avoid potential network disruption. Broadcasts are not acknowledged, so there is no guarantee all devices will receive the request. Responses are returned immediately by all receiving devices, which can cause congestion on a large network.

Format

The following table provides the contents of the frame. For details on frame structure, see API frame specifications.

Offset	Size	Frame Field	Description
0	8-bit	Start Delimiter	Indicates the start of an API frame.
1	16-bit	Length	Number of bytes between the length and checksum.
3	8-bit	**Frame type**	Remote AT Command Request - **0x17**.
4	8-bit	**Frame ID**	Identifies the data frame for the host to correlate with a subsequent response. If set to **0**, the device will not emit a response frame.
5	64-bit	**64-bit destination address**	Set to the 64-bit IEEE address of the destination device.
13	16-bit	**Reserved**	Unused, but this field is typically set to **0xFFFE**.
15	8-bit	**Remote command options**	Bit field of options that apply to the remote AT command request: ▪ **Bit 0**: Disable ACK [**0x01**] ▪ **Bit 1**: Apply changes on remote [**0x02**] • If not set, changes will not applied until the device receives an **AC** command or a subsequent command change is received with this bit set

Offset	Size	Frame Field	Description
			■ Bit 2: Reserved (set to 0) ■ Bit 3: Reserved (set to 0) ■ **Bit 4**: Send the remote command securely [**0x10**] **Note** Option values may be combined. Set all unused bits to 0.
16	16-bit	**AT command**	The two ASCII characters that identify the AT Command.
18-n	variable	**Parameter value (optional)**	If present, indicates the requested parameter value to set the given register. If no characters are present, it queries the current parameter value and returns the result in the response.
EOF	8-bit	Checksum	0xFF minus the 8-bit sum of bytes from offset 3 to this byte (between length and checksum).

Examples

Each example is written without escapes—**AP** = **1**—and all bytes are represented in hex format. For brevity, the start delimiter, length, and checksum fields have been excluded.

Set remote command parameter

Set the **NI** string of a device with the 64-bit address of **0013A20012345678** to "**Remote**" and apply the change immediately.

The corresponding Remote AT Command Response- 0x97 with a matching Frame ID will indicate success.

```
7E 00 15 17 27 00 13 A2 00 12 34 56 78 FF FE 02 4E 49 52 65 6D 6F 74 65 F6
```

Frame type	Frame ID	64-bit dest	Reserved	Command options	AT command	Parameter value
0x17	0x27	0x0013A200 12345678	0xFFFE	0x02	0x4E49	0x52656D6F7465
Request	*Matches response*		*Unused*	*Apply Change*	*"NI"*	*"Remote"*

Queue remote command parameter change

Change the PAN ID of a remote device so it can migrate to a new PAN, since this change would cause network disruption, the change is queued so that it can be made active later with a subsequent **AC** command or written to flash with a queued **WR** command so the change will be active after a power cycle.

The corresponding Remote AT Command Response- 0x97 with a matching Frame ID will indicate success.

```
7E 00 11 17 68 00 13 A2 00 12 34 56 78 FF FE 00 49 44 04 51 D8
```

Frame type	Frame ID	64-bit dest	Reserved	Command options	AT command	Parameter value
0x17	0x68	0x0013A200 12345678	0xFFFE	0x00	0x4944	0x0451
Request	*Matches response*		*Unused*	*Queue Change*	*"ID"*	

Query remote command parameter

Query the temperature of a remote device—**TP** command.

The corresponding Remote AT Command Response- 0x97 with a matching Frame ID will return the temperature value.

```
7E 00 0F 17 FA 00 13 A2 00 12 34 56 78 FF FE 00 54 50 84
```

Frame type	Frame ID	64-bit dest	Reserved	Command options	AT command	Parameter value
0x17	0xFA	0x0013A200 12345678	0xFFFE	0x00	0x5450	(omitted)
Request	*Matches response*		*Unused*	*N/A*	*"TP"*	*Query the parameter*

64-bit Receive Packet - 0x80

Request frames:

- Transmit Request - 0x10
- 64-bit Transmit Request - 0x00
- 16-bit Transmit Request - 0x01

Description

This frame type is emitted when a device configured with legacy API output— = **2**—receives an RF data packet from a device configured to use 64-bit source addressing—**MY** = **0xFFFE**.

Note This frame format is deprecated and should only be used by customers who require compatibility with legacy Digi RF products. For new designs, we encourage you to use Receive Packet - 0x90 for reception of API transmissions.

Format

The following table provides the contents of the frame. For details on frame structure, see API frame specifications.

Offset	Size	Frame Field	Description
0	8-bit	Start Delimiter	Indicates the start of an API frame.
1	16-bit	Length	Number of bytes between the length and checksum.
3	8-bit	**Frame type**	64-bit Receive Packet - **0x80**
4	64-bit	**64-bit source address**	The sender's 64-bit IEEE address.
12	8-bit	**RSSI**	Received Signal Strength Indicator. The Hexadecimal equivalent of (-dBm) value. For example if RX signal strength is -40 dBm, then 0x28 (40 decimal) is returned.
13	8-bit	**Options**	Bit field of options that apply to the received message: ■ Bit 0: Reserved ■ **Bit 1**: Packet was sent as a broadcast [**0x02**] ■ **Bit 2**: 802.15.4 only - Packet was broadcast across all PANs [**0x04**] **Note** Option values may be combined.
14-n	variable	**RF data**	The RF payload data that the device receives.
EOF	8-bit	Checksum	0xFF minus the 8-bit sum of bytes from offset 3 to this byte (between length and checksum).

Examples

Each example is written without escapes (**AP** = **1**) and all bytes are represented in hex format. For brevity, the start delimiter, length, and checksum fields have been excluded.

64-bit unicast

A device with the 64-bit address of **0013A20087654321** sent a unicast transmission to a specific device with the payload of "**TxData**". The following frame is emitted if the destination is configured with **AO** = **2**.

```
7E 00 11 80 00 13 A2 00 12 34 56 78 5E 01 54 78 44 61 74 61 11
```

Frame type	64-bit source	RSSI	Rx options	Received data
0x80	0x0013A200 87654321	0x5E	0x01	0x547844617461
Output		*-94 dBm*	*ACK was sent*	*"TxData"*

16-bit Receive Packet - 0x81

Request frames:

- Transmit Request - 0x10
- 64-bit Transmit Request - 0x00
- 16-bit Transmit Request - 0x01

Description

This frame type is emitted when a device configured with legacy API output— = **2**—receives an RF data packet from a device configured to use 16-bit source addressing—**MY** < **0xFFFE**.

Note This frame format is deprecated and should only be used by customers who require compatibility with legacy Digi RF products. For new designs, we encourage you to use Receive Packet frame - 0x90 for reception of API transmissions.

Format

The following table provides the contents of the frame. For details on frame structure, see API frame specifications.

Offset	Size	Frame Field	Description
0	8-bit	Start Delimiter	Indicates the start of an API frame.
1	16-bit	Length	Number of bytes between the length and checksum.
3	8-bit	**Frame type**	16-bit Receive Packet - **0x81**
4	16-bit	**16-bit source address**	The sender's 16-bit network address.
6	8-bit	**RSSI**	Received Signal Strength Indicator. The Hexadecimal equivalent of (-dBm) value. For example if RX signal strength is -40 dBm, then 0x28 (40 decimal) is returned.
7	8-bit	**Options**	Bit field of options that apply to the received message: ▪ Bit 0: Reserved ▪ **Bit 1**: Packet was sent as a broadcast [**0x02**] ▪ **Bit 2**: 802.15.4 only - Packet was broadcast across all PANs [**0x04**] **Note** Option values may be combined.
8-n	variable	**RF data**	The RF payload data that the device receives.
EOF	8-bit	Checksum	0xFF minus the 8-bit sum of bytes from offset 3 to this byte (between length and checksum).

Examples

Each example is written without escapes (**AP** = **1**) and all bytes are represented in hex format. For brevity, the start delimiter, length, and checksum fields have been excluded.

64-bit unicast

A device with the 16-bit address of **1234** sent a unicast transmission to a specific device with the payload of "**TxData**". The following frame is emitted if the destination is configured with **AO** = **2**.

```
7E 00 0B 81 12 34 5E 01 54 78 44 61 74 61 93
```

Frame type	64-bit source	RSSI	Rx options	Received data
0x80	0x1234	0x5E	0x01	0x547844617461
Output		*-94 dBm*	*ACK was sent*	*"TxData"*

64-bit I/O Sample Indicator - 0x82

Description

This frame type is emitted when a device configured with legacy API output— = **2**— receives an I/O sample frame from a remote device configured to use 64-bit source addressing—**MY** = **0xFFFE**. Only devices running in API mode will send I/O samples out the serial port.

Note This frame format is deprecated and should only be used by customers who require compatibility with legacy Digi RF products. For new designs, we encourage you to use I/O Sample Indicator - 0x92 for reception of I/O samples.

Format

The following table provides the contents of the frame. For details on frame structure, see API frame specifications.

Offset	Size	Frame Field	Description
0	8-bit	Start Delimiter	Indicates the start of an API frame.
1	16-bit	Length	Number of bytes between the length and checksum.
3	8-bit	**Frame type**	64-bit I/O Sample Indicator - **0x82**
4	64-bit	**64-bit source address**	The sender's 64-bit IEEE address.
12	8-bit	**RSSI**	Received Signal Strength Indicator. The Hexadecimal equivalent of (-dBm) value. For example if RX signal strength is -40 dBm, then 0x28 (40 decimal) is returned.
13	8-bit	**Options**	Bit field of options that apply to the received message: ▪ Bit 0: Reserved ▪ **Bit 1**: Packet was sent as a broadcast [**0x02**] ▪ **Bit 2**: 802.15.4 only - Packet was broadcast across all PANs [**0x04**] **Note** Option values may be combined.
14	8-bit	**Number of samples**	The number of sample sets included in the payload.
15	16-bit	**Sample mask**	Bit field that indicates which I/O lines on the remote are configured as inputs, if any: **bit 0**: DIO0 **bit 1**: DIO1

Offset	Size	Frame Field	Description
			bit 2: DIO2 **bit 3**: DIO3 **bit 4**: DIO4 **bit 5**: DIO5 **bit 6**: DIO6 **bit 7**: DIO7 **bit 8**: DIO8 **bit 9**: ADC0 **bit 10**: ADC1 **bit 11**: ADC2 **bit 12**: ADC3 bit 13: N/A bit 14: N/A bit 15: N/A Each bit represents either a DIO line or ADC channel. Bit set to 1 if channel is active.
17	16-bit	**Digital samples (if included)**	If the sample set includes any digital I/O lines—**Digital channel mask** > **0**—this field contain samples for all enabled digital I/O lines. If no digital lines are configured as inputs or outputs, this field will be omitted. DIO lines that do not have sampling enabled return 0. Bits in this field are arranged the same as they are in the channel mask field.
19	16-bit variable	**Analog samples (if included)**	If the sample set includes any analog I/O lines, each enabled analog input returns a 16-bit value indicating the ADC measurement of that input. Analog samples are ordered sequentially from AD0 to AD3.
EOF	8-bit	Checksum	0xFF minus the 8-bit sum of bytes from offset 3 to this byte (between length and checksum).

16-bit I/O Sample Indicator - 0x83

Description

This frame type is emitted when a device configured with legacy API output— = **2**— receives an I/O sample frame from a remote device configured to use 64-bit source addressing—**MY** = **0xFFFE**. Only devices running in API mode will send I/O samples out the serial port.

Note This frame format is deprecated and should only be used by customers who require compatibility with legacy Digi RF products. For new designs, we encourage you to use I/O Data Sample Rx Indicator frame - 0x92 for reception of I/O samples.

Format

The following table provides the contents of the frame. For details on frame structure, see API frame specifications.

Offset	Size	Frame Field	Description
0	8-bit	Start Delimiter	Indicates the start of an API frame.
1	16-bit	Length	Number of bytes between the length and checksum.
3	8-bit	**Frame type**	16-bit I/O Sample Indicator - **0x83**
4	16-bit	**16-bit source address**	The sender's 16-bit network address.
6	8-bit	**RSSI**	Received Signal Strength Indicator. The Hexadecimal equivalent of (-dBm) value. For example if RX signal strength is -40 dBm, then 0x28 (40 decimal) is returned.
7	8-bit	**Options**	Bit field of options that apply to the received message: ▪ Bit 0: Reserved ▪ **Bit 1**: Packet was sent as a broadcast [**0x02**] ▪ **Bit 2**: 802.15.4 only - Packet was broadcast across all PANs [**0x04**] **Note** Option values may be combined.
8	8-bit	**Number of samples**	The number of sample sets included in the payload.
9	16-bit	**Sample mask**	Bit field that indicates which I/O lines on the remote are configured as inputs, if any: **bit 0**: DIO0 **bit 1**: DIO1 **bit 2**: DIO2

Offset	Size	Frame Field	Description
			bit 3: DIO3 **bit 4**: DIO4 **bit 5**: DIO5 **bit 6**: DIO6 **bit 7**: DIO7 **bit 8**: DIO8 **bit 9**: ADC0 **bit 10**: ADC1 **bit 11**: ADC2 **bit 12**: ADC3 bit 13: N/A bit 14: N/A bit 15: N/A Each bit represents either a DIO line or ADC channel. Bit set to 1 if channel is active.
11	16-bit	**Digital samples (if included)**	If the sample set includes any digital I/O lines—**Digital channel mask** > **0**— this field contain samples for all enabled digital I/O lines. If no digital lines are configured as inputs or outputs, this field will be omitted. DIO lines that do not have sampling enabled return 0. Bits in this field are arranged the same as they are in the channel mask field.
13	16-bit variable	**Analog samples (if included)**	If the sample set includes any analog I/O lines, each enabled analog input returns a 16-bit value indicating the ADC measurement of that input. Analog samples are ordered sequentially from AD0 to AD3.
EOF	8-bit	Checksum	0xFF minus the 8-bit sum of bytes from offset 3 to this byte (between length and checksum).

Local AT Command Response - 0x88

Request frames:

- Local AT Command Request - 0x08
- Queue Local AT Command Request - 0x09

Description

This frame type is emitted in response to a local AT Command request. Some commands send back multiple response frames; for example, ND (Network Discovery). Refer to individual AT command descriptions for details on API response behavior.

This frame is only emitted if the Frame ID in the request is non-zero.

Format

The following table provides the contents of the frame. For details on frame structure, see API frame specifications.

Offset	Size	Frame Field	Description
0	8-bit	Start Delimiter	Indicates the start of an API frame.
1	16-bit	Length	Number of bytes between the length and checksum.
3	8-bit	**Frame type**	Local AT Command Response - **0x88**
4	8-bit	**Frame ID**	Identifies the data frame for the host to correlate with a prior request.
5	16-bit	**AT command**	The two ASCII characters that identify the AT Command.
7	8-bit	**Command status**	Status code for the host's request: **0** = OK **1** = ERROR **2** = Invalid command **3** = Invalid parameter
8-n	variable	**Command data (optional)**	If the host requested a command parameter change, this field will be omitted. If the host queried a command by omitting the parameter value in the request, this field will return the value currently set on the device.
EOF	8-bit	Checksum	0xFF minus the 8-bit sum of bytes from offset 3 to this byte (between length and checksum).

Examples

Each example is written without escapes (**AP** = **1**) and all bytes are represented in hex format. For brevity, the start delimiter, length, and checksum fields have been excluded.

Set local command parameter

Host set the NI string of the local device to "**End Device**" using a 0x08 request frame.

The corresponding Local AT Command Response - 0x88 with a matching Frame ID is emitted as a response:

```
7E 00 05 88 01 4E 49 00 DF
```

Frame type	Frame ID	AT command	Command Status	Command data
0x88	0xA1	0x4E49	0x00	(omitted)
Response	*Matches request*	*"NI"*	*Success*	*Parameter changes return no data*

Query local command parameter

Host queries the temperature of the local device—**TP** command—using a 0x08 request frame.

The corresponding Local AT Command Response - 0x88 with a matching Frame ID is emitted with the temperature value as a response:

```
7E 00 07 88 01 54 50 00 FF FE D5
```

Frame type	Frame ID	AT command	Command Status	Command data
0x88	0x17	0x5450	0x00	0xFFFE
Response	*Matches request*	*"TP"*	*Success*	*-2 °C*

Transmit Status - 0x89

Request frames:

- 64-bit Transmit Request - 0x00
- 16-bit Transmit Request - 0x01

Description

This frame type is emitted when a transmit request completes. The status field of this frame indicates whether the request succeeded or failed and the reason.

This frame is only emitted if the Frame ID in the request is non-zero.

Note Broadcast transmissions are not acknowledged and always return a status of **0x00**, even if the delivery failed.

Format

The following table provides the contents of the frame. For details on frame structure, see API frame specifications.

Offset	Size	Frame Field	Description
0	8-bit	Start Delimiter	Indicates the start of an API frame.
1	16-bit	Length	Number of bytes between the length and checksum.
3	8-bit	**Frame type**	Transmit Status - **0x89**
4	8-bit	**Frame ID**	Identifies the data frame for the host to correlate with a prior request.
5	8-bit	**Delivery status**	Complete list of delivery statuses: **0x00** = Success **0x01** = No ACK received **0x02** = CCA failure **0x03** = Indirect message unrequested **0x04** = Transceiver was unable to complete the transmission **0x21** = Network ACK failure **0x22** = Not joined to network **0x2C** = Invalid frame values (check the phone number) **0x31** = Internal error **0x32** = Resource error - lack of free buffers, timers, etc. **0x34** = No Secure Session Connection **0x35** = Encryption Failure **0x74** = Message too long **0x76** = Socket closed unexpectedly **0x78** = Invalid UDP port **0x79** = Invalid TCP port **0x7A** = Invalid host address

Offset	Size	Frame Field	Description
			0x7B = Invalid data mode **0x7C** = Invalid interface. **0x7D** = Interface not accepting frames. **0x7E** = A modem update is in progress. Try again after the update is complete. **0x80** = Connection refused **0x81** = Socket connection lost **0x82** = No server **0x83** = Socket closed **0x84** = Unknown server **0x85** = Unknown error **0x86** = Invalid TLS configuration (missing file, and so forth) **0x87** = Socket not connected **0x88** = Socket not bound Refer to the tables below for a filtered list of status codes that are appropriate for specific devices.
EOF	8-bit	Checksum	0xFF minus the 8-bit sum of bytes from offset 3 to this byte (between length and checksum).

Delivery status codes

Protocol-specific status codes follow

XBee 802.15.4

0x00 = Success

0x01 = No ACK received

0x02 = CCA failure

0x03 = Indirect message unrequested

0x04 = Transceiver was unable to complete the transmission

0x21 = Network ACK failure

0x22 = Not joined to network

0x31 = Internal error

0x32 = Resource error - lack of free buffers, timers, etc.

0x74 = Message too long

Examples

Each example is written without escapes (**AP** = **1**) and all bytes are represented in hex format. For brevity, the start delimiter, length, and checksum fields have been excluded.

Successful transmission

Host sent a unicast transmission to a remote device using a 64-bit Transmit Request - 0x00 frame.

The corresponding 0x89 Transmit Status with a matching Frame ID is emitted as a response to the request:

```
7E 00 03 89 52 00 24
```

Frame type	Frame ID	Delivery status
0x89	0x52	0x00
Response	*Matches request*	*Success*

Modem Status - 0x8A

Description

This frame type is emitted in response to specific conditions. The status field of this frame indicates the device behavior.

Format

Offset	Size	Frame Field	Description
0	8-bit	Start Delimiter	Indicates the start of an API frame.
1	16-bit	Length	Number of bytes between the length and checksum.
3	8-bit	**Frame type**	Modem Status - **0x8A**
4	8-bit	**Modem status**	Complete list of modem statuses: **0x00** = Hardware reset or power up **0x01** = Watchdog timer reset **0x02** = Joined network **0x03** = Left network **0x06** = Coordinator started **0x07** = Network security key was updated **0x0B** = Network woke up **0x0C** = Network went to sleep **0x0D** = Voltage supply limit exceeded **0x0E** = Digi Remote Manager connected **0x0F** = Digi Remote Manager disconnected **0x11** = Modem configuration changed while join in progress **0x12** = Access fault **0x13** = Fatal error **0x3B** = Secure session successfully established **0x3C** = Secure session ended **0x3D** = Secure session authentication failed **0x3E** = Coordinator detected a PAN ID conflict but took no action **0x3F** = Coordinator changed PAN ID due to a conflict **0x32** = BLE Connect **0x33** = BLE Disconnect **0x34** = Bandmask configuration failed **0x35** = Cellular component update started **0x36** = Cellular component update failed **0x37** = Cellular component update completed **0x38** = XBee firmware update started **0x39** = XBee firmware update failed **0x3A** = XBee firmware update applying **0x40** = Router PAN ID was changed by coordinator due to a conflict **0x42** = Network Watchdog timeout expired **0x80** through **0xFF** = Stack error Refer to the tables below for a filtered list of status codes that are

Offset	Size	Frame Field	Description
			appropriate for specific devices.
EOF	8-bit	Checksum	0xFF minus the 8-bit sum of bytes from offset 3 to this byte (between length and checksum).

Modem status codes

Statuses for specific modem types are listed here.

XBee 802.15.4

0x00 = Hardware reset or power up

0x01 = Watchdog timer reset

0x02 = End device successfully associated with a coordinator

0x03 = End device disassociated from coordinator or coordinator failed to form a new network

0x06 = Coordinator formed a new network

0x0D = Voltage supply limit exceeded

0x3B = XBee 3 - Secure session successfully established

0x3C = XBee 3 - Secure session ended

0x3D = XBee 3 - Secure session authentication failed

0x32 = XBee 3 - BLE Connect

0x33 = XBee 3 - BLE Disconnect

0x34 = XBee 3 - No Secure Session Connection

Examples

Each example is written without escapes (**AP** = **1**) and all bytes are represented in hex format. For brevity, the start delimiter, length, and checksum fields have been excluded.

Boot status

When a device powers up, it returns the following API frame:

```
7E 00 02 8A 00 75
```

Frame type	Modem Status
0x8A	0x00
Status	*Hardware Reset*

Remote AT Command Response- 0x97

Request frame: Remote AT Command Request - 0x17

Description

This frame type is emitted in response to a Remote AT Command Request - 0x17. Some commands send back multiple response frames; for example, the **ND** command. Refer to individual AT command descriptions for details on API response behavior.

This frame is only emitted if the Frame ID in the request is non-zero.

Format

The following table provides the contents of the frame. For details on frame structure, see API frame specifications.

Offset	Size	Frame Field	Description
0	8-bit	Start Delimiter	Indicates the start of an API frame.
1	16-bit	Length	Number of bytes between the length and checksum.
3	8-bit	**Frame type**	Remote AT Command Response - **0x97**
4	8-bit	**Frame ID**	Identifies the data frame for the host to correlate with a prior request.
5	64-bit	**64-bit source address**	The sender's 64-bit address.
13	16-bit	**Reserved**	Unused, but this field is typically set to **0xFFFE**.
15	16-bit	**AT command**	The two ASCII characters that identify the AT Command.
17	8-bit	**Command status**	Status code for the host's request: **0x00** = OK **0x01** = ERROR **0x02** = Invalid command **0x03** = Invalid parameter **0x04** = Transmission failure **0x0C** = Encryption error
18-n	variable	**Parameter value (optional)**	If the host requested a command parameter change, this field will be omitted. If the host queried a command by omitting the parameter value in the request, this field will return the value currently set on the device.
EOF	8-bit	Checksum	0xFF minus the 8-bit sum of bytes from offset 3 to this byte (between length and checksum).

Examples

Each example is written without escapes (**AP** = **1**) and all bytes are represented in hex format. For brevity, the start delimiter, length, and checksum fields have been excluded.

Set remote command parameter

Host set the **NI** string of a remote device to "**Remote**" using a Remote AT Command Request - 0x17.

The corresponding 0x97 Remote AT Command Response with a matching Frame ID is emitted as a response:

```
7E 00 0F 97 27 00 13 A2 00 12 34 56 78 12 7E 4E 49 00 51
```

Frame type	Frame ID	64-bit source	Reserved	AT command	Command Status	Command data
0x97	0x27	0x0013A200 12345678	0x127E	0x4E49	0x00	(omitted)
Response	*Matches request*		*Unused*	*"NI"*	*Success*	*Parameter changes return no data*

Transmission failure

Host queued the the PAN ID change of a remote device using a Remote AT Command Request - 0x17. Due to existing network congestion, the host will retry any failed attempts.

The corresponding 0x97 Remote AT Command Response with a matching Frame ID is emitted as a response:

```
7E 00 0F 97 27 00 13 A2 00 12 34 56 78 FF FE 49 44 04 EA
```

Frame type	Frame ID	64-bit source	Reserved	AT command	Command Status	Command data
0x97	0x27	0x0013A200 12345678	0xFFFE	0x4944	0x04	(omitted)
Response	*Matches request*		*Unused*	*"ID"*	*Transmission failure*	*Parameter changes return no data*

Query remote command parameter

Query the temperature of a remote device—.

The corresponding 0x97 Remote AT Command Response with a matching Frame ID is emitted with the temperature value as a response:

```
7E 00 11 97 27 00 13 A2 00 12 34 56 78 FF FE 54 50 00 00 2F A8
```

Frame type	Frame ID	64-bit source	Reserved	AT command	Command Status	Command data
0x97	0x27	0x0013A200 12345678	0x0013A200 12345678	0x4944	0x00	0x002F
Response	*Matches request*		*Unused*	*"TP"*	*Success*	*+47 °C*

Regulatory information

United States (FCC) 159
Europe (CE) 174
ISED (Innovation, Science and Economic Development Canada) 176
Australia (RCM) 178
South Korea 178
IFETEL (Mexico) 182

United States (FCC)

XBee/XBee-PRO S2C 802.15.4 RF Modules comply with Part 15 of the FCC rules and regulations. Compliance with the labeling requirements, FCC notices and antenna usage guidelines is required.

To fulfill FCC Certification, the OEM must comply with the following regulations:

1. The system integrator must ensure that the text on the external label provided with this device is placed on the outside of the final product.
2. RF Modules may only be used with antennas that have been tested and approved for use with the modules.

OEM labeling requirements

WARNING! As an Original Equipment Manufacturer (OEM) you must ensure that FCC labeling requirements are met. You must include a clearly visible label on the outside of the final product enclosure that displays the following content:

Required FCC Label for OEM products containing the XBee-PRO S2C SMT RF Module

Contains FCC ID: MCQ-PS2CSM

This device complies with Part 15 of the FCC Rules. Operation is subject to the following two conditions: (1.) this device may not cause harmful interference and (2.) this device must accept any interference received, including interference that may cause undesired operation.

Required FCC Label for OEM products containing the XBee S2C TH RF Module

Contains FCC ID: MCQ-S2CTH

This device complies with Part 15 of the FCC Rules. Operation is subject to the following two conditions: (1.) this device may not cause harmful interference and (2.) this device must accept any interference received, including interference that may cause undesired operation.

Required FCC Label for OEM products containing the XBee-PRO S2C TH RF Module

Contains FCC ID: MCQ-PS2CTH

This device complies with Part 15 of the FCC Rules. Operation is subject to the following two conditions: (1.) this device may not cause harmful interference and (2.) this device must accept any interference received, including interference that may cause undesired operation.

FCC notices

IMPORTANT: XBee/XBee-PRO S2C 802.15.4 RF Modules have been certified by the FCC for use with other products without any further certification (as per FCC section 2.1091). Modifications not expressly approved by Digi could void the user's authority to operate the equipment.

IMPORTANT: OEMs must test final product to comply with unintentional radiators (FCC section 15.107 & 15.109) before declaring compliance of their final product to Part 15 of the FCC Rules.

IMPORTANT: The RF module has been certified for remote and base radio applications. If the module will be used for portable applications, the device must undergo SAR testing.

This equipment has been tested and found to comply with the limits for a Class B digital device, pursuant to Part 15 of the FCC Rules. These limits are designed to provide reasonable protection against harmful interference in a residential installation. This equipment generates, uses and can

radiate radio frequency energy and, if not installed and used in accordance with the instructions, may cause harmful interference to radio communications. However, there is no guarantee that interference will not occur in a particular installation.

If this equipment does cause harmful interference to radio or television reception, which can be determined by turning the equipment off and on, the user is encouraged to try to correct the interference by one or more of the following measures: Re-orient or relocate the receiving antenna, Increase the separation between the equipment and receiver, Connect equipment and receiver to outlets on different circuits, or Consult the dealer or an experienced radio/TV technician for help.

FCC-approved antennas (2.4 GHz)

The XBee and XBee-PRO RF Modules can be installed using antennas and cables constructed with non-standard connectors (RPSMA, RPTNC, etc.) An adapter cable may be necessary to attach the XBee connector to the antenna connector.

The modules are FCC approved for fixed base station and mobile applications for the channels indicated in the tables below. If the antenna is mounted at least 25 cm (10 in) from nearby persons, the application is considered a mobile application. Antennas not listed in the table must be tested to comply with FCC Section 15.203 (Unique Antenna Connectors) and Section 15.247 (Emissions).

The antennas in the tables below have been approved for use with this module. Cable loss is required when using gain antennas as shown in the tables. Digi does not carry all of these antenna variants. Contact Digi Sales for available antennas.

All antenna part numbers followed by an asterisk (*) are not available from Digi. Consult with an antenna manufacturer for an equivalent option.

XBee S2C SMT RF module

The following table shows the antennas approved for use with the XBee S2C SMT RF module.

Part number	Type (description)	Gain (dBi)	Application*	Min. separation	Required antenna cable loss (dB)		
					Channels 11-24	Channel 25	Channel 26
Integral antennas							
29000313	Integral PCB antenna	0.0	Fixed/Mobile	25 cm	N/A	N/A	N/A
A24-QI	Monopole (Integrated whip)	1.5	Fixed/Mobile	25 cm	N/A	N/A	N/A
Dipole antennas							
A24-HASM-450	Dipole (Half-wave articulated RPSMA - 4.5”)	2.1	Fixed	25 cm	N/A	N/A	N/A
A24-HABSM*	Dipole (Articulated RPSMA)	2.1	Fixed	25 cm	N/A	N/A	N/A
29000095	Dipole (Half-wave articulated RPSMA - 4.5”)	2.1	Fixed/Mobile	25 cm	N/A	N/A	N/A
A24-HABUF-P5I	Dipole (Half-wave articulated bulkhead mount U.FL. w/ 5” pigtail)	2.1	Fixed/Mobile	25 cm	N/A	N/A	N/A

Part number	Type (description)	Gain (dBi)	Application*	Min. separation	Required antenna cable loss (dB)		
					Channels 11-24	Channel 25	Channel 26
A24-HASM-525	Dipole (Half-wave articulated RPSMA - 5.25")	2.1	Fixed	25 cm	N/A	N/A	N/A
Omni-directional antennas							
A24-F2NF	Omni-directional (Fiberglass base station)	2.1	Fixed/Mobile	25 cm	N/A	N/A	N/A
A24-F3NF	Omni-directional (Fiberglass base station)	3.0	Fixed/Mobile	25 cm	N/A	N/A	N/A
A24-F5NF	Omni-directional (Fiberglass base station)	5.0	Fixed	25 cm	N/A	N/A	N/A
A24-F8NF	Omni-directional (Fiberglass base station)	8.0	Fixed	2 m	N/A	N/A	0.1
A24-F9NF	Omni-directional (Fiberglass base station)	9.5	Fixed	2 m	N/A	N/A	1.6
A24-F10NF	Omni-directional (Fiberglass base station)	10.0	Fixed	2 m	N/A	N/A	2.1
A24-F12NF	Omni-directional (Fiberglass base station)	12.0	Fixed	2 m	N/A	N/A	4.1
A24-W7NF	Omni-directional (Fiberglass base station)	7.2	Fixed	2 m	N/A	N/A	N/A
A24-M7NF	Omni-directional (Mag-mount base station)	7.2	Fixed	2 m	N/A	N/A	N/A
A24-F15NF	Omni-directional (Fiberglass base station)	15.0	Fixed	2 m	1.1	1.1	7.1
Panel antennas							
A24-P8SF	Flat Panel	8.5	Fixed	2 m	N/A	N/A	6.1
A24-P8NF	Flat Panel	8.5	Fixed	2 m	N/A	N/A	6.1
A24-P13NF	Flat Panel	13.0	Fixed	2 m	N/A	3.1	10.6
A24-P14NF	Flat Panel	14.0	Fixed	2 m	N/A	4.1	11.6
A24-P15NF	Flat Panel	15.0	Fixed	2 m	N/A	5.1	12.6
A24-P16NF	Flat Panel	16.0	Fixed	2 m	N/A	6.1	13.6

Part number	Type (description)	Gain (dBi)	Application*	Min. separation	Required antenna cable loss (dB)		
					Channels 11-24	Channel 25	Channel 26
A24-P19NF	Flat Panel	19.0	Fixed	2 m	1.1	9.1	16.6
Yagi antennas							
A24-Y6NF	Yagi (6-element)	8.8	Fixed	2 m	N/A	N/A	3.9
A24-Y7NF	Yagi (7-element)	9.0	Fixed	2 m	N/A	N/A	4.1
A24-Y9NF	Yagi (9-element)	10.0	Fixed	2 m	N/A	N/A	5.1
A24-Y10NF	Yagi (10-element)	11.0	Fixed	2 m	N/A	0.6	6.1
A24-Y12NF	Yagi (12-element)	12.0	Fixed	2 m	N/A	1.6	7.1
A24-Y13NF	Yagi (13-element)	12.0	Fixed	2 m	N/A	1.6	7.1
A24-Y15NF	Yagi (15-element)	12.5	Fixed	2 m	N/A	2.1	7.6
A24-Y16NF	Yagi (16-element)	13.5	Fixed	2 m	N/A	3.1	8.6
A24-Y16RM	Yagi (16-element, RPSMA connector)	13.5 dBi	Fixed	2 m	N/A	3.1	8.6
A24-Y18NF	Yagi (18-element)	15.0	Fixed	2 m	1.1	4.6	10.1

XBee S2C TH RF Module

The following table shows the antennas approved for use with the XBee S2C TH RF Module.

Part number	Type (description)	Gain (dBi)	Application*	Min. separation	Required antenna cable loss (dB)		
					Channels 11-24	Channel 25	Channel 26
Integral antennas							
29000294	Integral PCB antenna	-0.5	Fixed/Mobile	25 cm	N/A	N/A	N/A
A24-QI	Monopole (Integrated whip)	1.5	Fixed/Mobile	25 cm	N/A	N/A	N/A
Dipole antennas							
A24-HASM-450	Dipole (Half-wave articulated RPSMA - 4.5”)	2.1	Fixed	25 cm	N/A	N/A	N/A
A24-HABSM	Dipole (Articulated RPSMA)	2.1	Fixed	25 cm	N/A	N/A	N/A
29000095	Dipole (Half-wave articulated RPSMA - 4.5”)	2.1	Fixed/Mobile	25 cm	N/A	N/A	N/A
A24-HABUF-P5I	Dipole (Half-wave articulated bulkhead mount U.FL. w/ 5” pigtail)	2.1	Fixed/Mobile	25 cm	N/A	N/A	N/A
A24-HASM-525	Dipole (Half-wave articulated RPSMA - 5.25")	2.1	Fixed	25 cm	N/A	N/A	N/A
Omni-directional antennas							
A24-F2NF	Omni-directional (Fiberglass base station)	2.1	Fixed/Mobile	25 cm	N/A	N/A	N/A
A24-F3NF	Omni-directional (Fiberglass base station)	3.0	Fixed/Mobile	25 cm	N/A	N/A	N/A
A24-F5NF	Omni-directional (Fiberglass base station)	5.0	Fixed	25 cm	N/A	N/A	N/A
A24-F8NF	Omni-directional (Fiberglass base station)	8.0	Fixed	2 m	N/A	N/A	N/A

Part number	Type (description)	Gain (dBi)	Application*	Min. separation	Required antenna cable loss (dB)		
					Channels 11-24	Channel 25	Channel 26
A24-F9NF	Omni-directional (Fiberglass base station)	9.5	Fixed	2 m	N/A	N/A	0.9
A24-F10NF	Omni-directional (Fiberglass base station)	10.0	Fixed	2 m	N/A	N/A	1.4
A24-F12NF	Omni-directional (Fiberglass base station)	12.0	Fixed	2 m	N/A	N/A	3.4
A24-W7NF	Omni-directional (Fiberglass base station)	7.2	Fixed	2 m	N/A	N/A	N/A
A24-M7NF	Omni-directional (Mag-mount base station)	7.2	Fixed	2 m	N/A	N/A	N/A
A24-F15NF	Omni-directional (Fiberglass base station)	15.0	Fixed	2 m	0.4	0.4	6.4
Panel antennas							
A24-P8SF	Flat Panel	8.5	Fixed	2 m	N/A	N/A	4.9
A24-P8NF	Flat Panel	8.5	Fixed	2 m	N/A	N/A	4.9
A24-P13NF	Flat Panel	13.0	Fixed	2 m	N/A	3.4	9.4
A24-P14NF	Flat Panel	14.0	Fixed	2 m	N/A	4.4	10.4
A24-P15NF	Flat Panel	15.0	Fixed	2 m	N/A	5.4	11.4
A24-P16NF	Flat Panel	16.0	Fixed	2 m	N/A	6.4	12.4
A24-P19NF	Flat Panel	19.0	Fixed	2 m	0.4	9.4	15.4
Yagi antennas							
A24-Y6NF	Yagi (6-element)	8.8	Fixed	2 m	N/A	N/A	4.7
A24-Y7NF	Yagi (7-element)	9.0	Fixed	2 m	N/A	N/A	4.9
A24-Y9NF	Yagi (9-element)	10.0	Fixed	2 m	N/A	0.4	5.9
A24-Y10NF	Yagi (10-element)	11.0	Fixed	2 m	N/A	1.4	6.9

Part number	Type (description)	Gain (dBi)	Application*	Min. separation	Required antenna cable loss (dB)		
					Channels 11-24	Channel 25	Channel 26
A24-Y12NF	Yagi (12-element)	12.0	Fixed	2 m	N/A	2.4	7.9
A24-Y13NF	Yagi (13-element)	12.0	Fixed	2 m	N/A	2.4	7.9
A24-Y15NF	Yagi (15-element)	12.5	Fixed	2 m	N/A	2.9	8.4
A24-Y16NF	Yagi (16-element)	13.5	Fixed	2 m	N/A	3.9	9.4
A24-Y16RM	Yagi (16-element, RPSMA connector)	13.5	Fixed	2 m	N/A	3.9	9.4
A24-Y18NF	Yagi (18-element)	15.0	Fixed	2 m	0.4	5.4	10.9

XBee-PRO S2C SMT RF Module

The following table shows the antennas approved for use with the XBee-PRO S2C SMT RF Module.

Part Number	Type (Description)	Gain (dBi)	Application*	Min Separation	Required antenna cable loss (dB)	
					Channels 11-23†	Channel 24†
Internal antennas						
29000313	Integral PCB antenna	0.0	Fixed/Mobile	25 cm	N/A	N/A
A24-QI	Monopole (Integrated whip)	1.5	Fixed/Mobile	25 cm	N/A	N/A
Dipole antennas						
A24-HASM-450	Dipole (Half-wave articulated RPSMA - 4.5”)	2.1	Fixed	25 cm	N/A	N/A
A24-HABSM	Dipole (Articulated RPSMA)	2.1	Fixed	25 cm	N/A	N/A
29000095	Dipole (Half-wave articulated RPSMA - 4.5”)	2.1	Fixed/Mobile	25 cm	N/A	N/A
A24-HABUF-P5I	Dipole (Half-wave articulated bulkhead mount U.FL. w/ 5” pigtail)	2.1	Fixed/Mobile	25 cm	N/A	N/A
A24-HASM-525	Dipole (Half-wave articulated RPSMA - 5.25")	2.1	Fixed	25 cm	N/A	N/A
Omni-directional antennas						
A24-F2NF	Omni-directional (Fiberglass base station)	2.1	Fixed/Mobile	25 cm	N/A	N/A
A24-F3NF	Omni-directional (Fiberglass base station)	3.0	Fixed/Mobile	25 cm	N/A	N/A
A24-F5NF	Omni-directional (Fiberglass base station)	5.0	Fixed	25 cm	N/A	N/A
A24-F8NF	Omni-directional (Fiberglass base station)	8.0	Fixed	2 m	N/A	N/A

Part Number	Type (Description)	Gain (dBi)	Application*	Min Separation	Required antenna cable loss (dB)	
					Channels 11-23†	Channel 24†
A24-F9NF	Omni-directional (Fiberglass base station)	9.5	Fixed	2 m	N/A	N/A
A24-F10NF	Omni-directional (Fiberglass base station)	10	Fixed	2 m	N/A	N/A
A24-F12NF	Omni-directional (Fiberglass base station)	12	Fixed	2 m	N/A	1.6
A24-W7NF	Omni-directional (Fiberglass base station)	7.2	Fixed	2 m	N/A	N/A
A24-M7NF	Omni-directional (Mag-mount base station)	7.2	Fixed	2 m	N/A	N/A
A24-F15NF	Omni-directional (Fiberglass base station)	15.0	Fixed	2 m	1.1	4.6
Panel antennas						
A24-P8SF	Flat Panel	8.5	Fixed	2 m	N/A	2.1
A24-P8NF	Flat Panel	8.5	Fixed	2 m	N/A	2.1
A24-P13NF	Flat Panel	13.0	Fixed	2 m	2.7	6.6
A24-P14NF	Flat Panel	14.0	Fixed	2 m	3.7	7.6
A24-P15NF	Flat Panel	15.0	Fixed	2 m	4.7	8.6
A24-P16NF	Flat Panel	16.0	Fixed	2 m	5.7	9.6
A24-P19NF	Flat Panel	19.0	Fixed	2 m	8.7	12.6
Yagi antennas						
A24-Y6NF	Yagi (6-element)	8.8	Fixed	2 m	N/A	1.9
A24-Y7NF	Yagi (7-element)	9.0	Fixed	2 m	N/A	2.1
A24-Y9NF	Yagi (9-element)	10.0	Fixed	2 m	N/A	3.1
A24-Y10NF	Yagi (10-element)	11.0	Fixed	2 m	0.6	4.1

Part Number	Type (Description)	Gain (dBi)	Application*	Min Separation	Required antenna cable loss (dB)	
					Channels 11-23†	Channel 24†
A24-Y12NF	Yagi (12-element)	12.0	Fixed	2 m	1.6	5.1
A24-Y13NF	Yagi (13-element)	12.0	Fixed	2 m	1.6	5.1
A24-Y15NF	Yagi (15-element)	12.5	Fixed	2 m	2.1	5.6
A24-Y16NF	Yagi (16-element)	13.5	Fixed	2 m	3.1	6.6
A24-Y16RM	Yagi (16-element, RPSMA connector)	13.5	Fixed	2 m	3.1	6.6
A24-Y18NF	Yagi (18-element)	15.0	Fixed	2 m	4.6	8.1

XBee-PRO S2C TH RF Module

The following table shows the antennas approved for use with the XBee-PRO S2C TH RF Module.

Part number	Type (description)	Gain (dBi)	Application*	Min. separation	Required antenna cable loss (dB)	
					Channels 11-23†	Channel 24†
Integral antennas						
29000294	Integral PCB antenna	-0.5	Fixed/Mobile	25 cm	N/A	N/A
A24-QI	Monopole (Integrated whip)	1.5	Fixed/Mobile	25 cm	N/A	N/A
Dipole antennas						
A24-HASM-450	Dipole (Half-wave articulated RPSMA - 4.5”)	2.1	Fixed/Mobile	25 cm	N/A	N/A
A24-HABSM	Dipole (Articulated RPSMA)	2.1	Fixed	25 cm	N/A	N/A
29000095	Dipole (Half-wave articulated RPSMA - 4.5”)	2.1	Fixed/Mobile	25 cm	N/A	N/A
A24-HABUF-P5I	Dipole (Half-wave articulated bulkhead mount U.FL. w/ 5” pigtail)	2.1	Fixed	25 cm	N/A	N/A
A24-HASM-525	Dipole (Half-wave articulated RPSMA - 5.25")	2.1	Fixed/ Mobile	25 cm	N/A	N/A
Omni-directional antennas						
A24-F2NF	Omni-directional (Fiberglass base station)	2.1	Fixed/Mobile	25 cm	N/A	N/A
A24-F3NF	Omni-directional (Fiberglass base station)	3.0	Fixed/Mobile	25 cm	N/A	N/A
A24-F5NF	Omni-directional (Fiberglass base station)	5.0	Fixed	25 cm	N/A	N/A
A24-F8NF	Omni-directional (Fiberglass base station)	8.0	Fixed	2 m	N/A	N/A

Part number	Type (description)	Gain (dBi)	Application*	Min. separation	Required antenna cable loss (dB)	
					Channels 11-23†	Channel 24†
A24-F9NF	Omni-directional (Fiberglass base station)	9.5	Fixed	2 m	N/A	N/A
A24-F10NF	Omni-directional (Fiberglass base station)	10.0	Fixed	2 m	N/A	N/A
A24-F12NF	Omni-directional (Fiberglass base station)	12.0	Fixed	2 m	N/A	1.4
A24-W7NF	Omni-directional (base station)	7.2	Fixed	2 m	N/A	N/A
A24-M7NF	Omni-directional (Mag-mount base station)	7.2	Fixed	2 m	N/A	N/A
A24-F15NF	Omni-directional (Fiberglass base station)	15.0	Fixed	2 m	0.4	4.4
Panel antennas						
A24-P8SF	Flat Panel	8.5	Fixed	2 m	N/A	0.4
A24-P8NF	Flat Panel	8.5	Fixed	2 m	N/A	0.4
A24-P13NF	Flat Panel	13	Fixed	2 m	2.4	4.9
A24-P14NF	Flat Panel	14	Fixed	2 m	3.4	5.9
A24-P15NF	Flat Panel	15.0	Fixed	2 m	4.4	6.9
A24-P16NF	Flat Panel	16.0	Fixed	2 m	5.4	7.9
A24-19NF	Flat Panel	19.0	Fixed	2 m	8.4	10.9
Yagi antennas						
A24-Y6NF	Yagi (6-element)	8.8	Fixed	2 m	N/A	1.2
A24-Y7NF	Yagi (7-element)	9.0	Fixed	2 m	N/A	1.4
A24-Y9NF	Yagi (9-element)	10.0	Fixed	2 m	N/A	2.4
A24-Y10NF	Yagi (10-element)	11.0 dBi	Fixed	2 m	0.4	3.4

Part number	Type (description)	Gain (dBi)	Application*	Min. separation	Required antenna cable loss (dB)	
					Channels 11-23†	Channel 24†
A24-Y12NF	Yagi (12-element)	12.0	Fixed	2 m	1.4	4.4
A24-Y13NF	Yagi (13-element)	12.0	Fixed	2 m	1.4	4.4
A24-Y15NF	Yagi (15-element)	12.5	Fixed	2 m	1.9	4.9
A24-Y16NF	Yagi (16-element)	13.5	Fixed	2 m	2.9	5.9
A24-Y16RM	Yagi (16-element, RPSMA connector)	13.5	Fixed	2 m	2.9	5.9
A24-Y18NF	Yagi (18-element)	15.0	Fixed	2 m	4.4	7.4

* If using the RF module in a portable application (for example - if the module is used in a handheld device and the antenna is less than 25 cm from the human body when the device is in operation): The integrator is responsible for passing additional SAR (Specific Absorption Rate) testing based on FCC rules 2.1091 and FCC Guidelines for Human Exposure to Radio Frequency Electromagnetic Fields, OET Bulletin and Supplement C. The testing results will be submitted to the FCC for approval prior to selling the integrated unit. The required SAR testing measures emissions from the module and how they affect the person.

† Although certified to operate on channels 11-24, currently this product only supports channels 12-23.

RF exposure

If you are an integrating the XBee into another product, you must include the following Caution statement in OEM product manuals to alert users of FCC RF exposure compliance:

CAUTION! To satisfy FCC RF exposure requirements for mobile transmitting devices, a separation distance of 20 cm or more should be maintained between the antenna of this device and persons during device operation. To ensure compliance, operations at closer than this distance are not recommended. The antenna used for this transmitter must not be co-located in conjunction with any other antenna or transmitter.

FCC publication 996369 related information

In publication 996369 section D03, the FCC requires information concerning a module to be presented by OEM manufacturers. This section assists in answering or fulfilling these requirements.

2.1 General

No requirements are associated with this section.

2.2 List of applicable FCC rules

This module conforms to FCC Part 15.247.

2.3 Summarize the specific operational use conditions

Certain approved antennas require attenuation for operation. For the XBee/XBee-PRO S2C 802.15.4 RF Module, see FCC-approved antennas (2.4 GHz).

Host product user guides should include the antenna table if end customers are permitted to select antennas.

2.4 Limited module procedures

Not applicable.

2.5 Trace antenna designs

While it is possible to build a trace antenna into the host PCB, this requires at least a Class II permissive change to the FCC grant which includes significant extra testing and cost. If an embedded trace antenna is desired, select the XBee module variant with the preferred antenna.

2.6 RF exposure considerations

For RF exposure considerations see RF exposure and FCC-approved antennas (2.4 GHz).

Host product manufacturers need to provide end-users a copy of the “RF Exposure” section of the manual: RF exposure.

2.7 Antennas

A list of approved antennas is provided for the XBee/XBee-PRO S2C 802.15.4 RF Modules. See FCC-approved antennas (2.4 GHz).

2.8 Label and compliance information

Host product manufacturers need to follow the sticker guidelines outlined in OEM labeling requirements.

2.9 Information on test modes and additional testing requirements

Contact a Digi sales representative for information on how to configure test modes for the XBee/XBee-PRO S2C 802.15.4 RF Module.

2.10 Additional testing, Part 15 Subpart B disclaimer

All final host products must be tested to be compliant to FCC Part 15 Subpart B standards. While the XBee/XBee-PRO S2C 802.15.4 module was tested to be complaint to FCC unintentional radiator standards, FCC Part 15 Subpart B compliance testing is still required for the final host product. This testing is required for all end products, and XBee/XBee-PRO S2C 802.15.4 module Part 15 Subpart B compliance does not affirm the end product's compliance.

See FCC notices for more details.

Europe (CE)

The XBee/XBee-PRO S2C 802.15.4 RF Modules (non-PRO variants) have been tested for use in several European countries. For a complete list, refer to www.digi.com/resources/certifications.

If XBee/XBee-PRO S2C 802.15.4 RF Modules are incorporated into a product, the manufacturer must ensure compliance of the final product with articles 3.1a and 3.1b of the Radio Equipment Directive. A Declaration of Conformity must be issued for each of these standards and kept on file as described in the Radio Equipment Directive.

Furthermore, the manufacturer must maintain a copy of the XBee/XBee-PRO S2C 802.15.4 RF Module user guide documentation and ensure the final product does not exceed the specified power ratings, antenna specifications, and/or installation requirements as specified in the user guide.

Maximum power and frequency specifications

For the through-hole device:

- Maximum power: 9.82 mW (9.92 dBm) Equivalent Isotropically Radiated Power (EIRP) at normal condition.
- Frequencies: 5 MHz channel spacing, beginning at 2405 MHz and ending at 2480 MHz.

For the surface-mount device:

- Maximum power: 12.65 mW (11.02 dBm) EIRP.
- Frequencies: 5 MHz channel spacing, beginning at 2405 MHz and ending at 2480 MHz.

CE and UKCA OEM labeling requirements

The CE and UKCA markings must be clearly visible and legible when you affix it to the product. If this is not possible, you must attach these marks to the packaging (if any) or accompanying documents.

CE labeling requirements

The "CE" marking must be affixed to a visible location on the OEM product. The following figure shows CE labeling requirements.

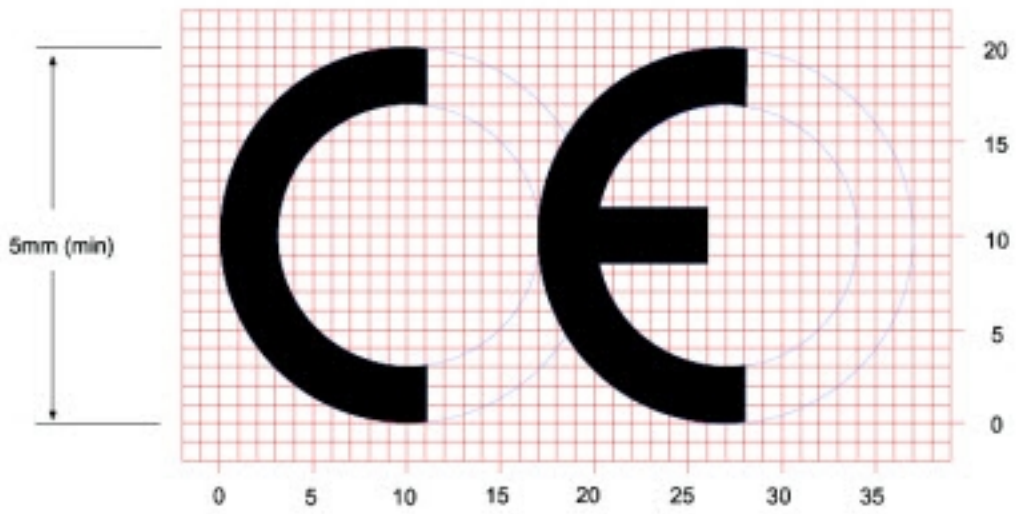

The CE mark shall consist of the initials “CE” taking the following form:

- If the CE marking is reduced or enlarged, the proportions given in the above graduated drawing must be respected.
- The CE marking must have a height of at least 5 mm except where this is not possible on account of the nature of the apparatus.
- The CE marking must be affixed visibly, legibly, and indelibly.

UK Conformity Assessed (UKCA) labeling requirements

See guidance/using-the-ukca-marking for further details.

You must make sure that:

- if you reduce or enlarge the size of your marking, the letters forming the UKCA marking must be in proportion to the version set out below
- the UKCA marking is at least 5 mm in height – unless a different minimum dimension is specified in the relevant legislation
- the UKCA marking is easily visible, legible (from 1 January 2023 it must be permanently attached)
- the UKCA marking can take different forms (for example, the colour does not have to be solid), as long as it remains visible, legible and maintains the required proportions.

Important note

Digi customers assume full responsibility for learning and meeting the required guidelines for each country in their distribution market. Refer to the radio regulatory agency in the desired countries of operation for more information.

Listen Before Talk requirement

The XBee/XBee-PRO S2C 802.15.4 RF Module must be configured to comply with the Listen Before Talk (LBT) requirements in the EN 300 328 standard. This can be accomplished by one of the following options:

1. Set the **PL** command to 3 (6 dBm) or lower, which ensures that the maximum transmitter power is under the limit at which LBT is required.
   or
2. Set the **CA** command as described in CA (CCA Threshold) to enable LBT at the required noise threshold level.

Declarations of conformity

Digi has issued Declarations of Conformity for the XBee RF Modules concerning emissions, EMC, and safety. For more information, see www.digi.com/resources/certifications.

Antennas

The following antennas have been tested and approved for use with the XBee/XBee-PRO S2C 802.15.4 RF Module:

All antenna part numbers followed by an asterisk (*) are not available from Digi. Consult with an antenna manufacturer for an equivalent option.

- Dipole (2.1 dBi, Omni-directional, Articulated RPSMA, Digi part number A24-HABSM)
- PCB Antenna (0.0 dBi)
- Monopole Whip (1.5 dBi)

ISED (Innovation, Science and Economic Development Canada)

Labeling requirements

Labeling requirements for Industry Canada are similar to those of the FCC. A clearly visible label on the outside of the final product enclosure must display the following text:

For XBee/XBee-PRO S2C 802.15.4 RF Module

Contains Model PS2CSM Radio, IC: 1846A-PS2CSM

The integrator is responsible for its product to comply with IC ICES-003 & FCC Part 15, Sub. B - Unintentional Radiators. ICES-003 is the same as FCC Part 15 Sub. B and Industry Canada accepts FCC test report or CISPR 22 test report for compliance with ICES-003.

For XBee S2C surface-mount

Contains Model XBee S2C Radio, IC: 1846A-XBS2C

The integrator is responsible for its product to comply with IC ICES-003 & FCC Part 15, Sub. B - Unintentional Radiators. ICES-003 is the same as FCC Part 15 Sub. B and Industry Canada accepts FCC test report or CISPR 22 test report for compliance with ICES-003.

For XBee-PRO S2C surface-mount

Contains Model PS2CSM Radio, IC: 1846A-PS2CSM

The integrator is responsible for its product to comply with IC ICES-003 & FCC Part 15, Sub. B - Unintentional Radiators. ICES-003 is the same as FCC Part 15 Sub. B and Industry Canada accepts FCC test report or CISPR 22 test report for compliance with ICES-003.

For XBee S2C through-hole

Contains Model S2CTH Radio, IC: 1846A-S2CTH

The integrator is responsible for its product to comply with IC ICES-003 & FCC Part 15, Sub. B - Unintentional Radiators. ICES-003 is the same as FCC Part 15 Sub. B and Industry Canada accepts FCC test report or CISPR 22 test report for compliance with ICES-003.

For XBee-PRO S2C through-hole

Contains Model PS2CTH Radio, IC: 1846A-PS2CTH

The integrator is responsible for its product to comply with IC ICES-003 & FCC Part 15, Sub. B - Unintentional Radiators. ICES-003 is the same as FCC Part 15 Sub. B and Industry Canada accepts FCC test report or CISPR 22 test report for compliance with ICES-003.

Transmitters for detachable antennas

This radio transmitter has been approved by Industry Canada to operate with the antenna types listed in the tables in FCC-approved antennas (2.4 GHz) with the maximum permissible gain and required antenna impedance for each antenna type indicated. Antenna types not included in this list, having a gain greater than the maximum gain indicated for that type, are strictly prohibited for use with this device. The required antenna impedance is 50 ohms.

Le présent émetteur radio a été approuvé par Industrie Canada pour fonctionner avec les types d'antenne énumérés et ayant un gain admissible maximal et l'impédance requise pour chaque type d'antenne. Les types d'antenne non inclus dans cette liste, ou dont le gain est supérieur au gain maximal indiqué, sont strictement interdits pour l'exploitation de l'émetteur.

Detachable antenna

Under Industry Canada regulations, this radio transmitter may only operate using an antenna of a type and maximum (or lesser) gain approved for the transmitter by Industry Canada. To reduce

potential radio interference to other users, the antenna type and its gain should be so chosen that the equivalent isotropically radiated power (EIRP) is not more than that necessary for successful communication.

Conformément à la réglementation d'Industrie Canada, le présent émetteur radio peut fonctionner avec une antenne d'un type et d'un gain maximal (ou inférieur) approuvé pour l'émetteur par Industrie Canada. Dans le but de réduire les risques de brouillage radioélectrique à l'intention des autres utilisateurs, il faut choisir le type d'antenne et son gain de sorte que la puissance isotrope rayonnée équivalente (p.i.r.e.) ne dépasse pas l'intensité nécessaire àl'établissement d'une communication satisfaisante.

Firmware Version Identification number (FVIN)

XBee S2C 802.15.4 firmware versions are 2xxx or 9xxx. FVIN can be read electronically by sending the ATVR command to the device.

Australia (RCM)

XBee S2C 802.15.4 and XBee-PRO S2C 802.15.4 modules comply with requirements to be used in end products in Australia and New Zealand. All products with EMC and radio communications must have registered RCM and R-NZ marks. Registration to use the compliance mark will only be accepted from Australia or New Zealand manufacturers or importers, or their agents.

In order to have a RCM or R-NZ mark on an end product, a company must comply with **a** or **b** below.

a. Have a company presence in Australia or New Zealand.
b. Have a company/distributor/agent in Australia or New Zealand that will sponsor the importing of the end product.

Contact Digi for questions related to locating a contact in Australia and New Zealand.

South Korea

The low-power XBee S2C TH and XBee S2C devices have received South Korean approvals. To show conformity to the certificate, you must add a label with the South Korean product information to the XBee S2C 802.15.4 RF Module.

For the through-hole device, you can place the label on the reverse side.

Recommended label material: Abraham Technical (700342) MFG P/N TAAE-014250.

The label size is: 15.9 mm x 15.9 mm (0.625 in x 0.625 in)

The complete label information is as follows:

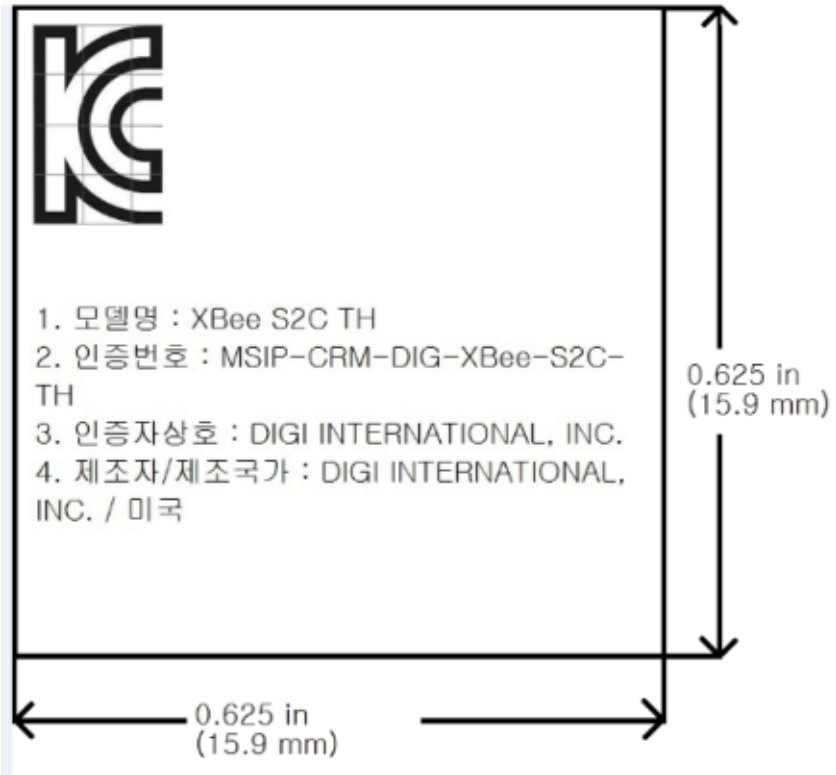

The KCC logo must be at least 5 mm tall.

The text shown in the label is:

1. 모델명 : XBee S2C TH
2. 인증번호 : MSIP-CRM-DIG-XBee-S2C-TH
3. 인증자상호 : DIGI INTERNATIONAL, INC.
4. 제조자/제조국가 : DIGI INTERNATIONAL, INC. / 미국

If the label size does not accommodate the required content, you can use abbreviated information, as follows:

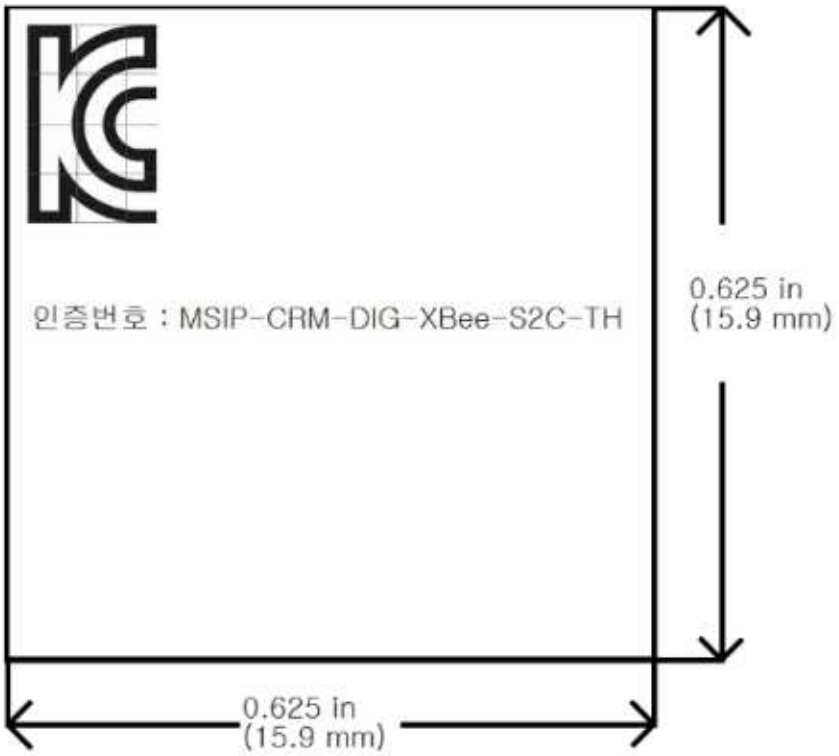

The KCC logo must be at least 5 mm tall.

The text shown on the label is:

인증번호 : MSIP-CRM-DIG-XBee-S2C-TH

For the surface-mount version, the label will overlay the existing product label.

CAUTION! By placing a label over the existing label, the certifications for Europe (CE), Australia, New Zealand (RCM), and Japan will no longer apply.

Recommended label material: Abraham Technical TELT-000465.

The label size is: 15.9 mm x 20.3 mm (0.625 in x 0.8 in)

The complete label information is as follows:

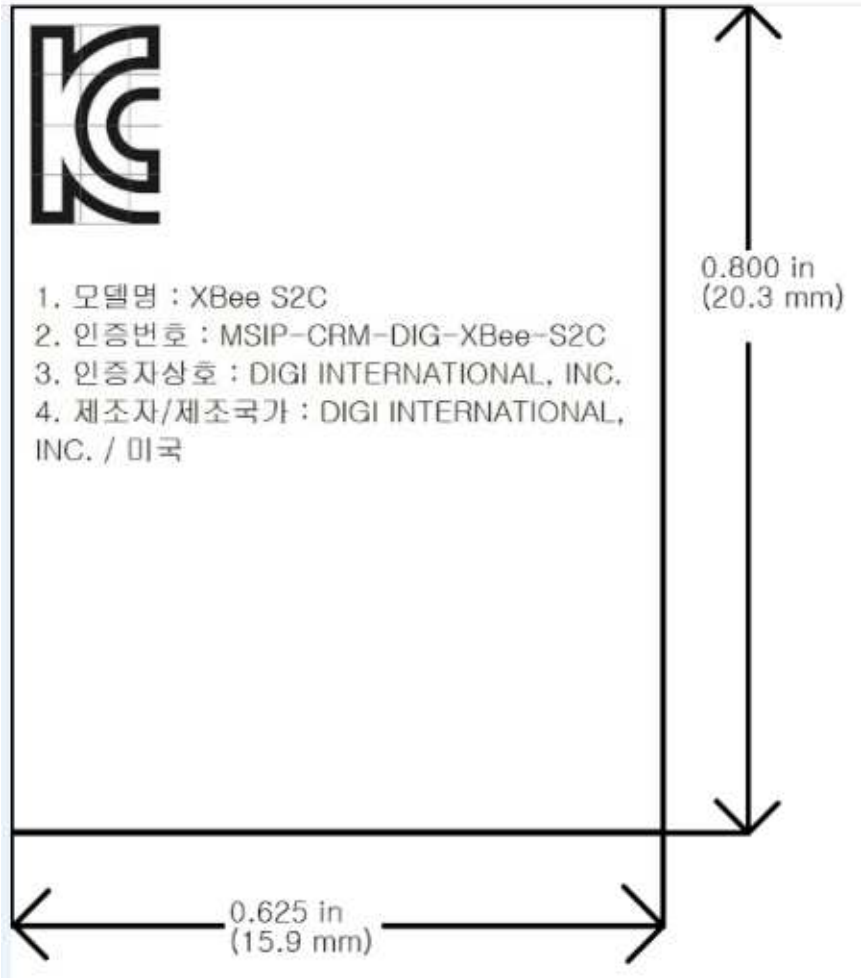

The KCC logo must be at least 5 mm tall.

The text shown in the label is:

1. 모델명 : XBee S2C
2. 인증번호 : MSIP-CRM-DIG-XBee-S2C
3. 인증자상호 : DIGI INTERNATIONAL, INC.
4. 제조자/제조국가 : DIGI INTERNATIONAL, INC. / 미국

If the label size does not accommodate the required content, you can use the abbreviated information, as follows:

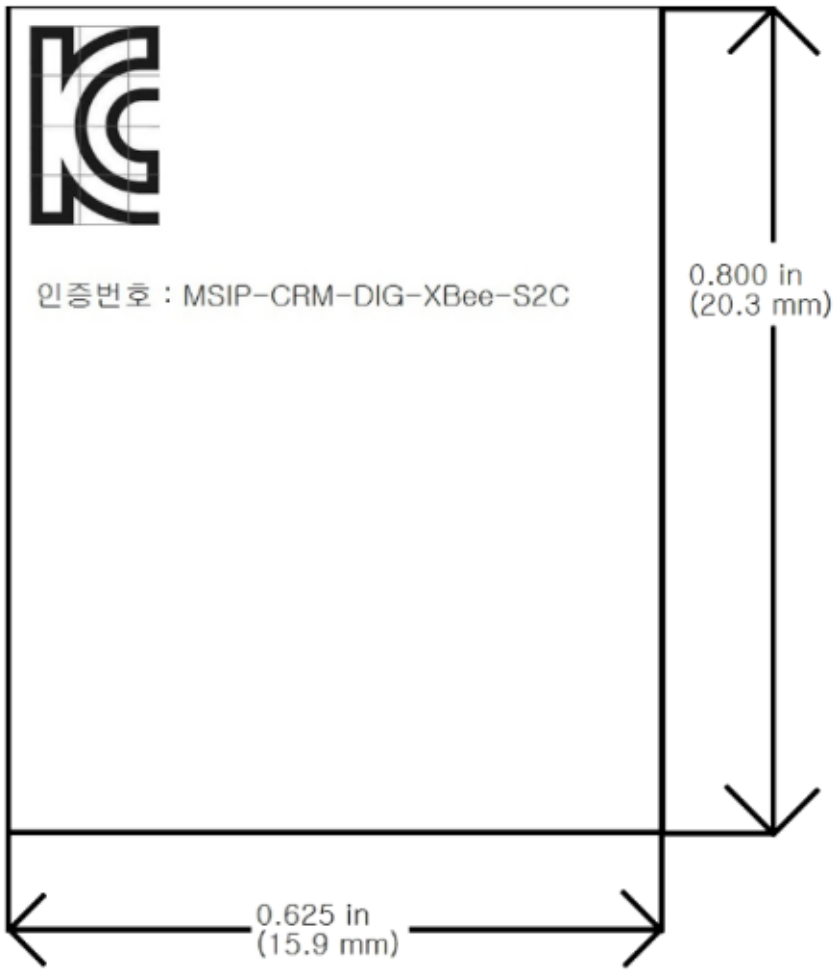

The KCC logo must be at least 5 mm tall.

The text shown in the label is:

인증번호 : MSIP-CRM-DIG-XBee-S2C

IFETEL (Mexico)

Mexico does not have a “modular” approval for radio products.

If XBee/XBee-PRO S2C 802.15.4 RF Modules are integrated into a product, the manufacturer must ensure compliance of the final product with all the requirements of Mexican regulations.

Manufacturer: Digi International

Country: USA

Brand: Digi

The Tariff Code (HS) for all XBee/XBee-PRO S2C radio modules is 8517-62-15.

Model: PS2CSM (XBee-Pro S2C surface-mount)

IFETEL (IFT) number RCPDIPS19-1817-A1 applies to these XBee-Pro S2C radios:

XBP24CZ7UIS-004	XBP24CZ7PIS-004	XBP24CZ7RIS-004	XBP24CZ7UISB003
XBP24CZ7PISB003	XBP24CZ7RISB003	XBP24CAUIS-001	XBP24CAPIS-001
XBP24CARIS-001	XBP24CDMUIS-001	XBP24CDMPIS-001	XBP24CDMRIS-001

Model: PS2CTH (XBee-Pro S2C through-hole)

IFETEL (IFT) number RCPDIPS19-1817 applies to these XBee-Pro S2C radios:

XBP24CZ7UITB003A	XBP24CZ7UITB003B	XBP24CZ7UITB003C	XBP24CZ7WITB003A
XBP24CZ7WIT-004	XBP24CZ7UIT-004	XBP24CZ7SIT-004	XBP24CZ7PIT-004
XBP24CZ7WITB003	XBP24CZ7UITB003	XBP24CZ7SITB003	XBP24CZ7PITB003
XBP24CAWIT-001	XBP24CAUIT-001	XBP24CASIT-001	XBP24CAPIT-001
XBP24CDMWIT-001	XBP24CDMUIT-001	XBP24CDMSIT-001	XBP24CDMPIT-001

Model: XBEE S2C (XBee S2C surface-mount)

IFETEL (IFT) number RCPDIXB19-1821 applies to these S2C radios:

XB24CZ7UIS-004	XB24CZ7PIS-004	XB24CZ7RIS-004	XB24CZ7UISB003
XB24CZ7PISB003	XB24CZ7RISB003	XB24CAUIS-001	XB24CAPIS-001
XB24CARIS-001	XB24CDMUIS-001	XB24CDMPIS-001	XB24CDMRIS-001

Model: S2CTH (XBee S2C through-hole)

IFETEL (IFT) number RCPDIS219-1821-A1 applies to these S2C radios:

XB24CZ7WIT-004,	XB24CZ7UIT-004,	XB24CZ7SIT-004,	XB24CZ7PIT-004,
XB24CZ7WITB003,	XB24CZ7UITB003,	XB24CZ7SITB003,	XB24CZ7PITB003,
XB24CAWIT-001,	XB24CAUIT-001,	XB24CASIT-001,	XB24CAPIT-001,
XB24CDMWIT-001,	XB24CDMUIT-001,	XB24CDMSIT-001,	XB24CDMPIT-001

OEM labeling requirements

WARNING! The Original Equipment Manufacturer (OEM) must ensure that Mexico IFT labeling requirements are met.

The IFETEL number for the XBee product must be listed either on the end product, on the packaging, in the manual, or in the software with the following phrase, substituting the IFT number for the XBee S2C product you are using for the XXXXXXXXX-XXXX:

> “Este equipo contiene el módulo XBee con Número IFETEL: XXXXXXXXX-XXXX”

or

"Este equipo contiene el módulo XBee con IFT #: XXXXXXXXX-XXXX"

The following paragraph must also be present in the User Manual for the end product:

"La operación de este equipo está sujeta a las siguientes dos condiciones: (1) es posible que este equipo o dispositivo no cause interferencia perjudicial y (2) este equipo o dispositivo debe aceptar cualquier interferencia, incluyendo la que pueda causar su operación no deseada."

Load 802.15.4 firmware on ZB devices

Background 186
Load 802.15.4 firmware 186

Background

Our XBee/XBee-PRO ZB RF modules are built on the same hardware as the XBee/XBee-PRO S2C 802.15.4 RF Module. It is possible to load 802.15.4 firmware on existing ZB modules. The table below shows which part numbers are compatible with 802.15.4 firmware.

Note Currently the 802.15.4 firmware is approved for use only in the United States, Canada, Europe, Australia and Japan. You can find region-specific regulatory information for the firmware in Regulatory information.

CAUTION! The antenna cable loss requirements for the 802.15.4 firmware are different than the ZB firmware for gain antennas exceeding 2.1 dBi. If you migrate a ZB device to 802.15.4 firmware, and are using gain antennas, you must adhere to the cable loss requirements found in Regulatory information.

XBee/XBee-PRO ZB S2C part numbers	Revision	Form factor	Hardware version (HV)
XB24CZ7PIS-004 XB24CZ7RIS-004 XB24CZ7UIS-004	All	XBee SMT	0x22
XB24CZ7PIT-004 XB24CZ7SIT-004 XB24CZ7UIT-004 XB24CZ7WIT-004	All	XBee TH	0x2E
XBP24CZ7PIS-004 XBP24CZ7RIS-004 XBP24CZ7UIS-004	Rev L (and later)	XBee SMT	0x30
XBP24CZ7PIT-004 XBP24CZ7SIT-004 XBP24CZ7UIT-004 XBP24CZ7WIT-004	All	XBee TH	0x2D

In addition to the differences between the 802.15.4 and Zigbee protocols, some of the operational features are different between the two firmware versions. For example, the XBee-PRO 802.15.4 supports fewer channels than the Zigbee firmware. It is important that you read and understand this user guide before developing with the 802.15.4 firmware.

Load 802.15.4 firmware

To load 802.15.4 firmware on an existing ZB module, use the following instructions. You must use the serial interface to perform this update. The device does not support OTA updates for changing 802.15.4 to ZB firmware or vice versa.

1. Verify that your device's part number (listed on the label) is included in the list shown in Background.
2. Install the device in a Digi development board and connect it to your PC.
3. The next steps involve loading firmware using XCTU. To download XCTU and read detailed instructions about it, go to:
   https://www.digi.com/products/xbee-rf-solutions/xctu-software/xctu

4. When you get to the **Update firmware** dialog box, in the **Function set** area, click the **802.15.4** option, and the newest firmware version.
5. Click **Update** and follow the instructions.
6. When the updating process successfully completes, your device runs 802.15.4 firmware. You can change back to Zigbee firmware at any time by following the same process and selecting the Zigbee firmware option instead.

Migrate from XBee through-hole to surface-mount devices

We designed the XBee surface-mount and through-hole devices to be compatible with each other and offer the same basic feature set. The surface-mount form factor has more I/O pins. Because the XBee device was originally offered in only the through-hole form factor, we offer this section to help you migrate from the through-hole to the surface-mount form factor.

Pin mapping 189
Mount the devices 190

Pin mapping

The following table shows the pin mapping for the surface-mount (SMT) pins to the through-hole (TH) pins. The pin names are from the XBee S2C SMT device.

SMT Pin #	Name	TH Pin #
1	GND	
2	VCC	1
3	DOUT	2
4	DIN/$\overline{\text{CONFIG}}$	3
5	[Reserved]	4
6	$\overline{\text{RESET}}$	5
7	PWM0/RSSI PWM	6
8	PWM1	7
9	[Reserved]	8
10	DI8/SLEEP_RQ/$\overline{\text{DTR}}$	9
11	GND	10
12	SPI_$\overline{\text{ATTN}}$ /$\overline{\text{BOOTMODE}}$	
13	GND	
14	SPI_CLK	
15	SPI_$\overline{\text{SSEL}}$	
16	SPI_MOSI	
17	SPI_MISO	
18	[Reserved]	
19	[Reserved]	
20	[Reserved]	
21	[Reserved]	
22	GND	
23	[Reserved]	
24	DIO4	11
25	DIO7/$\overline{\text{CTS}}$	12
26	On/$\overline{\text{SLEEP}}$	13
27	V_{REF}	14

SMT Pin #	Name	TH Pin #
28	DIO5/ASSOC	15
29	DIO6/$\overline{\text{RTS}}$	16
30	DIO3/AD3	17
31	DIO2/AD2	18
32	DIO1/AD1	19
33	DIO0/AD0	20
34	[Reserved]	
35	GND	
36	RF	
37	[Reserved]	

Mount the devices

One important difference between the SMT and TH devices is the way they mount to a printed circuit board (PCB). Each footprint requires different mounting techniques.

We designed a footprint that allows you to attach either device to a PCB. The following drawing shows the layout.

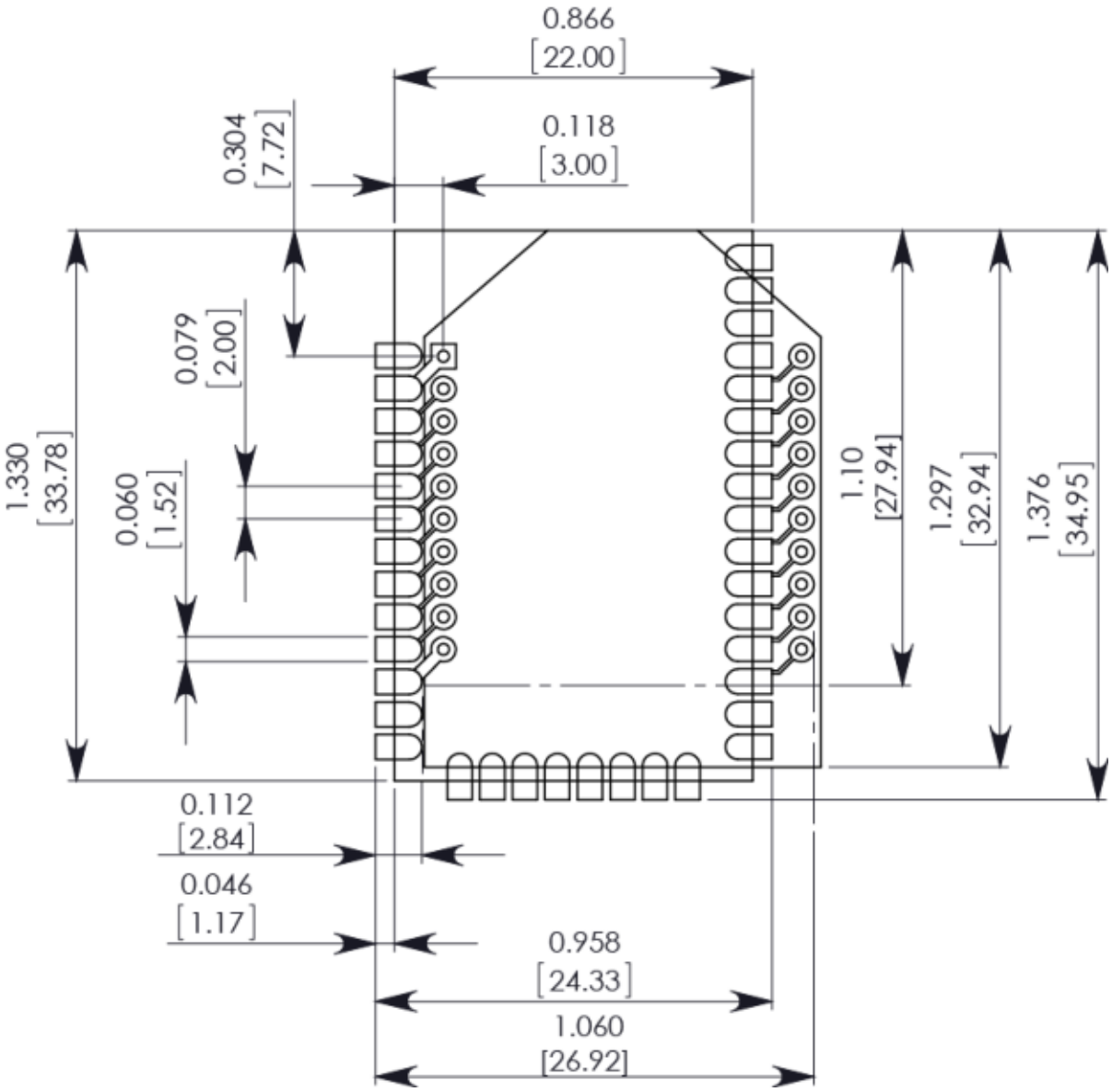

The round holes in the diagram are for the TH design, and the semi-oval pads are for the SMT design. Pin 1 of the TH design is lined up with pad 1 of the SMT design, but the pins are actually offset by one pad; see Pin mapping. By using diagonal traces to connect the appropriate pins, the layout will work for both devices.

PCB design and manufacturing contains information on attaching the SMT device.

PCB design and manufacturing

The XBee/XBee-PRO S2C 802.15.4 RF Module is designed for surface-mount on the OEM PCB. It has castellated pads to allow for easy solder attach inspection. The pads are all located on the edge of the module, so there are no hidden solder joints on these modules.

Recommended solder reflow cycle 193
Recommended footprint and keepout 193
Flux and cleaning 195
Rework 195

Recommended solder reflow cycle

The following table provides the recommended solder reflow cycle. The table shows the temperature setting and the time to reach the temperature; it does not show the cooling cycle.

Time (seconds)	Temperature (degrees C)
30	65
60	100
90	135
120	160
150	195
180	240
210	260

The maximum temperature should not exceed 260 °C.

The device will reflow during this cycle, and therefore must not be reflowed upside down. Take care not to jar the device while the solder is molten, as this can remove components under the shield from their required locations.

Hand soldering is possible and should be performed in accordance with approved standards.

The device has a Moisture Sensitivity Level (MSL) of 3. When using this product, consider the relative requirements in accordance with standard IPC/JEDEC J-STD-020.

In addition, note the following conditions:

a. Calculated shelf life in sealed bag: 12 months at < 40 °C and < 90% relative humidity (RH).
b. Environmental condition during the production: 30 °C /60% RH according to IPC/JEDEC J-STD-033C, paragraphs 5 through 7.
c. The time between the opening of the sealed bag and the start of the reflow process cannot exceed 168 hours if condition b) is met.
d. Baking is required if conditions b) or c) are not met.
e. Baking is required if the humidity indicator inside the bag indicates a RH of 10% more.
f. If baking is required, bake modules in trays stacked no more than 10 high for 4-6 hours at 125 °C.

Recommended footprint and keepout

We recommend that you use the following PCB footprints for surface-mounting. The dimensions without brackets are in inches, and those in brackets are in millimeters.

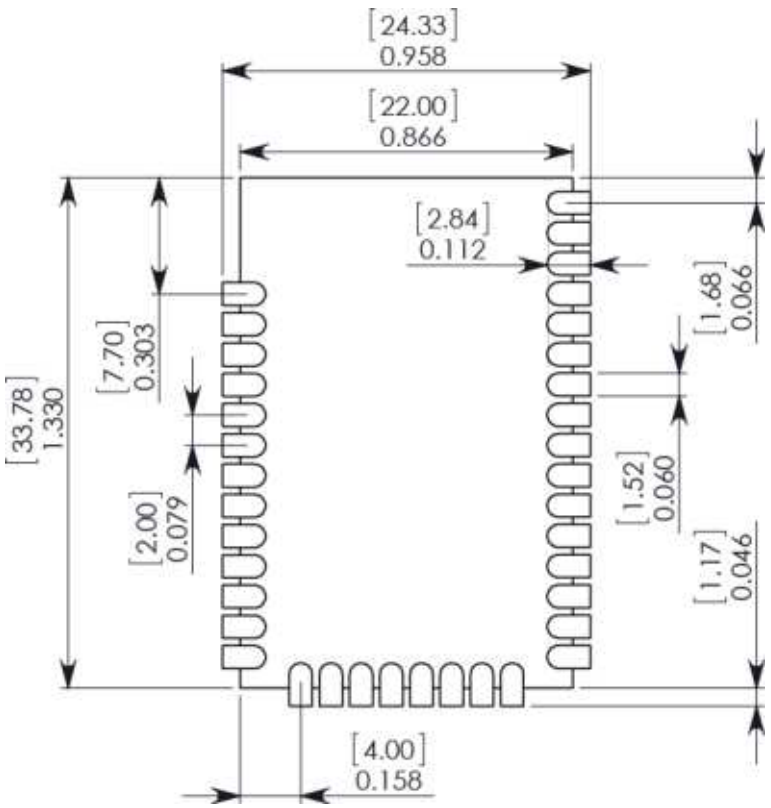

While the underside of the module is mostly coated with solder resist, we recommend that the copper layer directly below the module be left open to avoid unintended contacts. Copper or vias must not interfere with the three exposed RF test points on the bottom of the module (see below). Furthermore, these modules have a ground plane in the middle on the back side for shielding purposes, which can be affected by copper traces directly below the module.

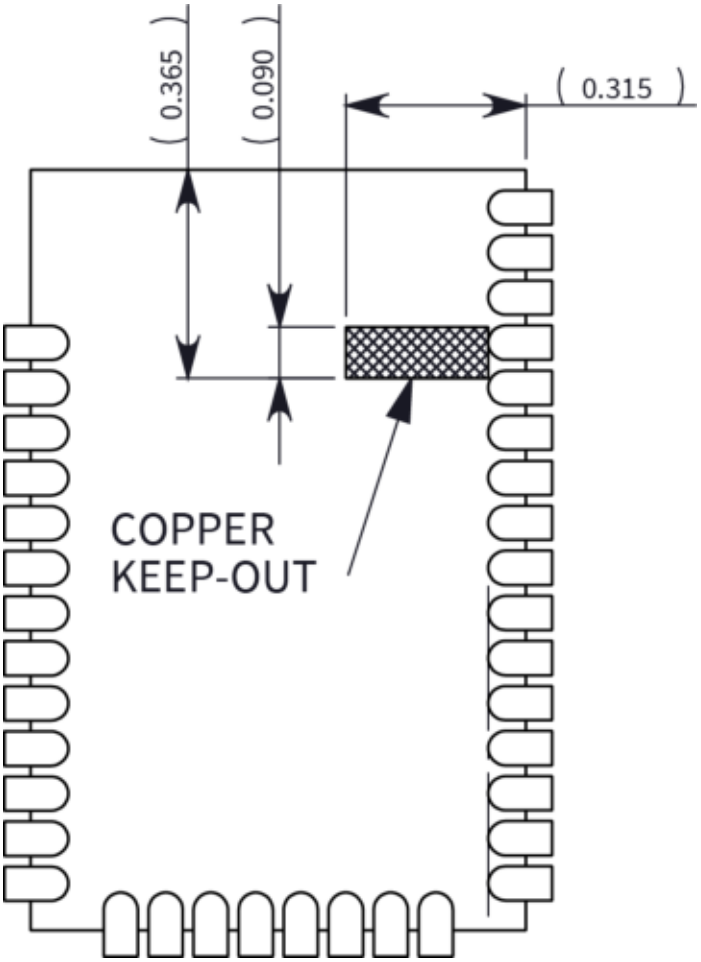

Flux and cleaning

We recommend that you use a “no clean” solder paste in assembling these devices. This eliminates the clean step and ensures that you do not leave unwanted residual flux under the device where it is difficult to remove. In addition:

- Cleaning with liquids can result in liquid remaining under the device or in the gap between the device and the host PCB. This can lead to unintended connections between pads.
- The residual moisture and flux residue under the device are not easily seen during an inspection process.

Rework

CAUTION! Any modification to the device voids the warranty coverage and certifications.

Rework should never be performed on the module itself. The module has been optimized to give the best possible performance, and reworking the module itself will void warranty coverage and certifications. We recognize that some customers will choose to rework and void the warranty; the

following information is given as a guideline in such cases to increase the chances of success during rework, though the warranty is still voided.

The module may be removed from the OEM PCB by the use of a hot air rework station, or hot plate. Care should be taken not to overheat the module. During rework, the module temperature may rise above its internal solder melting point and care should be taken not to dislodge internal components from their intended positions.