THIS COPY IS PROVIDED ON A RESTRICTED BASIS AND IS NOT TO BE USED IN ANY WAY DETRIMENTAL TO THE INTERESTS OF PANDUIT CORP.

PANDUIT PART NO.*	MAT'L SUFFIX	RECOMMENDED FASTENER	'A'	'B'	'C'	'D'	'E'	'F'	'G' (REF)	'H' (REF)	'I' (REF)	USE WITH THESE CABLE TIE CROSS SECTIONS	WEIGHT (g) lbs/100 pcs.
TM2S6	NONE -0 -30 -69 -120	#6 (M3) SCREW	0.630 [16.000]	0.425 [10.795]	0.275 [6.985]	0.215 [5.460] ±.020 [.5]	0.060 [1.525]	0.155 [3.937]	0.090 [2.3]	0.286	0.151	MINIATURE INTERMEDIATE STANDARD	0.126 (57.0)
TM2S8	NONE -0 -30 -69	#8 (M4) SCREW							0.105 [2.7]	0.332	0.176		0.113 (51.5)

MAT'L SUFFIX	MATERIAL
NONE	NYLON 6/6
-0	WEATHER RESISTANT NYLON
-30	HEAT STABILIZED NYLON
-69	FLAME RETARDANT NYLON
-120	NYLON 12

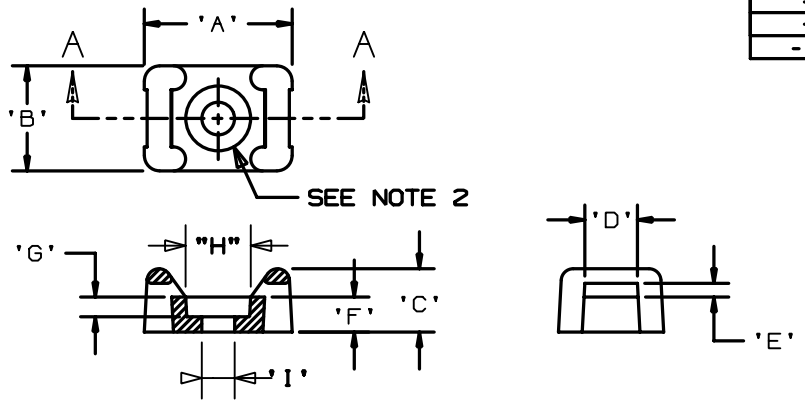

SECTION A-A

NOTES:
*1. SEE CURRENT PRICE SHEET FOR PART NUMBER SUFFIX DESIGNATION FOR PACKAGE SIZE.
2. HOLE DIMENSIONS SHOULD ACCOMMODATE SPECIFIED RECOMMENDED FASTENER.

DIMENSIONS IN BRACKETS ARE METRIC [mm]

CAD FILENAME/LAYERS: G00239EM_PB_TM2S_A_06

PANDUIT CORP. TINLEY PARK, ILLINOIS

TM2S -TIE MOUNT

UNLESS OTHERWISE SPECIFIED, DIMENSIONAL TOLERANCES ARE:
(.X) ±0.05 [1.3] (.XXX) ±0.010 [0.25]
(.XX) ±0.02 [0.5] ANGLES ± 5°

UNLESS OTHERWISE SPECIFIED, ALL DIMENSIONS ARE GIVEN IN INCHES. THIRD ANGLE PROJECTION.

DRAWN BY: AJV
MAT'L: SEE TABLE
DATE: 12-17-98
CHK'D:
SCALE: NONE
DRAWING NO.: GB0239EM
SIZE: A

REV	DATE	BY	CHK	DESCRIPTION	ECN - R	CUST	SUP
6	12-19-02	LGG		ADDED 120 MATERIAL BACK TO DRAWING	GB0239EM 6		