PART NO.	A28111-025	REV	ECO	DATE	APP
		A	104304	03-07-18	HV

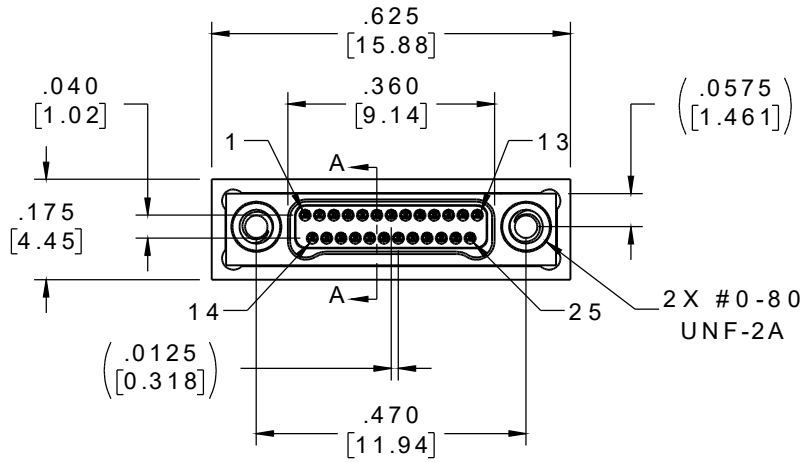

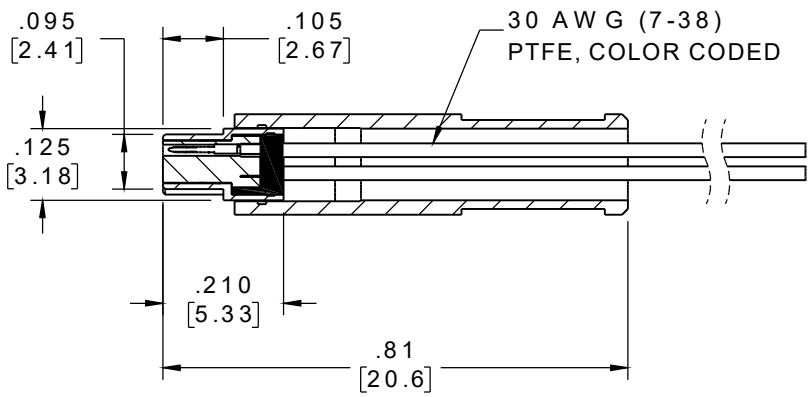

SECTION A-A

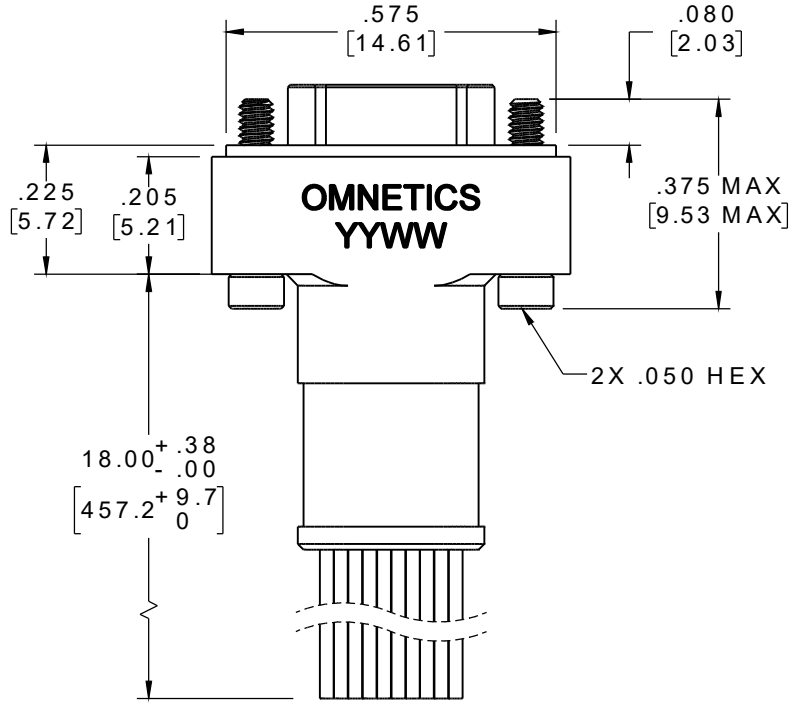

PIN #	COLOR
1, 11, 21	BLACK
2, 12, 22	BROWN
3, 13, 23	RED
4, 14, 24	ORANGE
5, 15, 25	YELLOW
6, 16	GREEN
7, 17	BLUE
8, 18	VIOLET
9, 19	GRAY
10, 20	WHITE

INTERNAL USE ONLY
USE MFG LOADING
PROCEDURE A28000-025

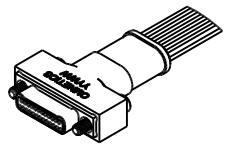

ACTUAL SIZE
EXCLUDING WIRE LENGTH

NOTE:

DIMENSIONS IN [ ] ARE IN MILLIMETERS UNLESS OTHERWISE NOTED AND ARE FOR REFERENCE ONLY

MNPO / SLDW	THIRD ANGLE -TOLERANCES- UNLESS OTHERWISE NOTED DIMENSIONS IN INCHES 2 PL DEC± .01 3 PL DEC± .005 4 PL DEC± .0005 ANGLES ± 1°	THIS DRAWING CONTAINS CONFIDENTIAL AND PROPRIETARY INFORMATION WHICH IS THE PROPERTY OF OMNETICS CONNECTOR CORP. THIS DOCUMENT MAY NOT, IN WHOLE OR IN PART, BE DUPLICATED, OR DISCLOSED FOR ANY PURPOSE, WITHOUT WRITTEN PERMISSION FROM OMNETICS CONNECTOR CORP.	DFTM. HV DATE 03-02-18 CHK'D. DATE APP'D. DATE TITLE: (25) PIN MALE Bi-Lobe® CONNECTOR W/BACKSHELL

OMNETICS CONNECTOR CORPORATION
7260 COMMERCE CIRCLE EAST
MINNEAPOLIS, MN 55432
WWW.OMNETICS.COM

CAGE CODE	61873
DWG NO.	A28111-025
SHEET 1 OF 2	REV A
SCALE: 3:1	