A83-1 / SMA83-1

Cascadable Amplifier
10 to 250 MHz

Rev. V3

Features

- HIGH GAIN-TWO STAGES: 35.5 dB (TYP.)
- LOW POWER DRAIN: 65 mA @ 5 VOLTS (TYP.)
- VOLTAGE CONTROLLED GAIN: 29 dB TO 39 dB @ Vcc = 3 TO 12 VOLTS
- LOW VSWR OVER FULL CONTROL RANGE: <1.5:1 (TYP.)

Description

The A83-1 RF amplifier is a discrete hybrid design, which uses thin film manufacturing processes for consistent performance and high reliability.
This 2 stage bipolar transistor feedback amplifier design displays impressive performance over a broadband frequency range. An active DC biasing network insures temperature-stable performance.
Both TO-8 and Surface Mount packages are hermetically sealed, and MIL-STD-883 environmental screening is available.

Product Image

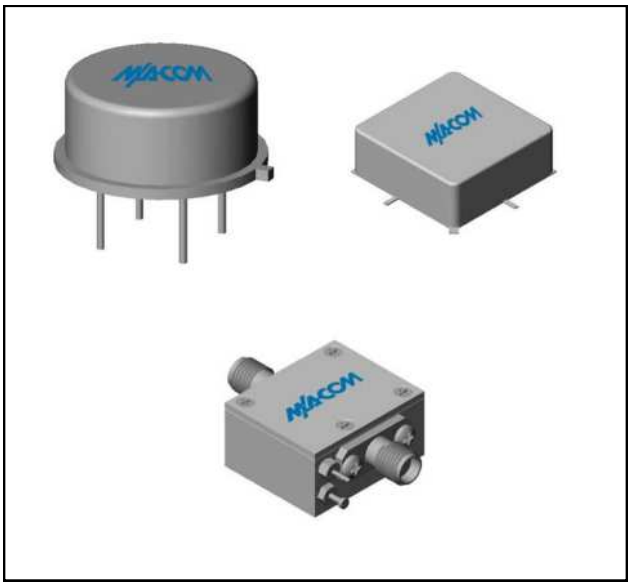

Ordering Information

Part Number	Package
A83-1	TO-8
SMA83-1	Surface Mount
CA83-1**	SMA Connectorized

** The connectorized version is not RoHs compliant.

Electrical Specifications: Z_0 = 50Ω, V_{CC} = +5 V_{DC}

Parameter	Units	Typical	Guaranteed	
		25ºC	0º to 50ºC	-54º to +85ºC*
Frequency	MHz	10-300	10-250	10-250
Small Signal Gain (min)	dB	35.5	34.0	33.0
Gain Flatness (max)	dB	±0.3	±0.5	±0.8
Reverse Isolation	dB	43		
Noise Figure (max)	dB	2.5	3.0	3.5
Power Output @ 1 dB comp. (min)	dBm	-1.5	-2.5	-3.5
IP3	dBm	+9		
IP2	dBm	+12		
Second Order Harmonic IP	dBm	+18		
VSWR Input / Output (max)		1.3:1 / 1.3:1	1.8:1 / 1.8:1	2.0:1 / 2.0:1
DC Current @ 5 Volts (max)	mA	13	15	16

Absolute Maximum Ratings

Parameter	Absolute Maximum
Storage Temperature	-62ºC to +125ºC
Case Temperature	+125ºC
DC Voltage	+13 V
Continuous Input Power	+6 dBm
Short Term Input power (1 minute max.)	50 mW
Peak Power (3 µsec max.)	0.5 W
"S" Series Burn-In Temperature (case)	+125ºC

Thermal Data: V_{CC} = +5 V_{DC}

Parameter	Rating
Thermal Resistance θ_{jc}	171ºC/W
Transistor Power Dissipation P_d	0.021 W
Junction Temperature Rise Above Case T_{jc}	4ºC

* Over temperature performance limits for part number CA83-1, guaranteed from 0°C to +50°C only.

M/A-COM Technology Solutions Inc. (MACOM) and its affiliates reserve the right to make changes to the product(s) or information contained herein without notice.
Visit www.macom.com for additional data sheets and product information.

For further information and support please visit:
https://www.macom.com/support

A83-1 / SMA83-1

Cascadable Amplifier
10 to 250 MHz

Rev. V3

Typical Performance Curves at +25°C

Gain

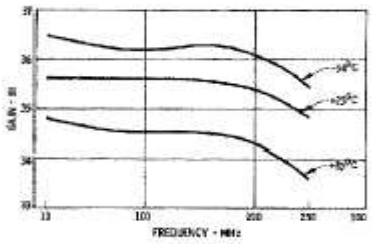

Noise Figure

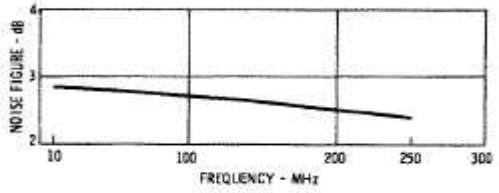

Power Output *

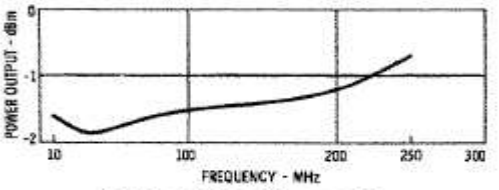

* at 1 dB Gain Compression

Intercept Point

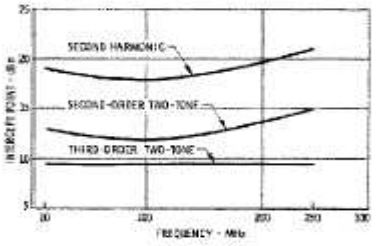

VSWR

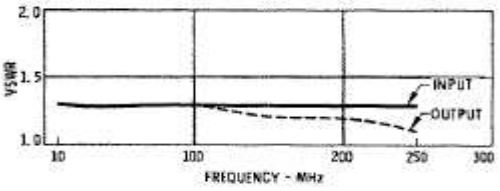

Outline Drawing: TO-8 *

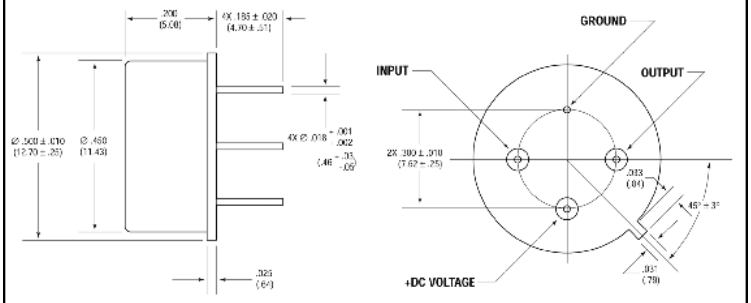

WEIGHT: 1 gram (0.04 oz.) max

Outline Drawing: Surface Mount *

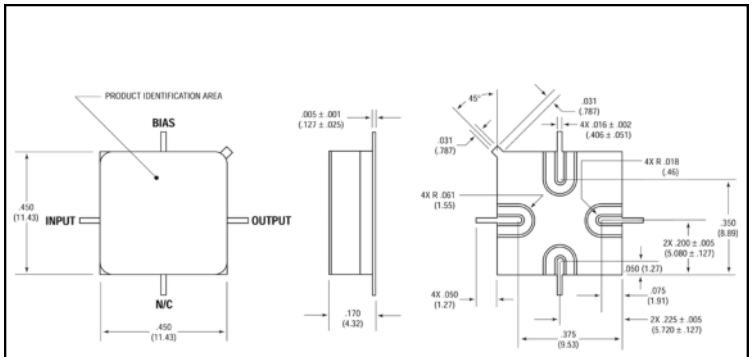

WEIGHT: 1 gram (0.04 oz.) max

Outline Drawing: SMA Connectorized *

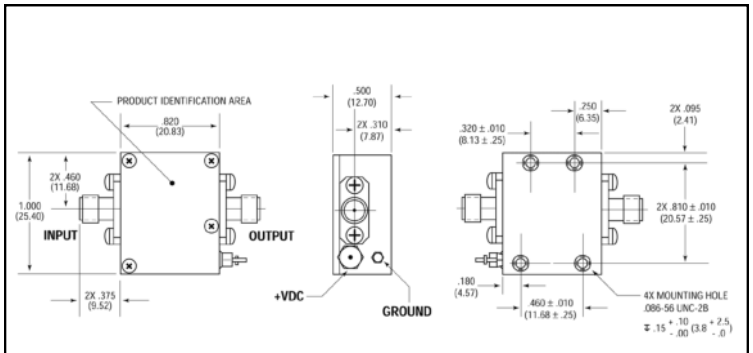

WEIGHT: 19 grams (0.67 oz.) max

* Dimensions are inches (millimeters) ±0.015 (0.38) unless otherwise specified.

M/A-COM Technology Solutions Inc. (MACOM) and its affiliates reserve the right to make changes to the product(s) or information contained herein without notice.
Visit www.macom.com for additional data sheets and product information.

For further information and support please visit:
https://www.macom.com/support

M/A-COM Technology Solutions Inc. All rights reserved.
Information in this document is provided in connection with M/A-COM Technology Solutions Inc ("MACOM") products. These materials are provided by MACOM as a service to its customers and may be used for informational purposes only. Except as provided in MACOM's Terms and Conditions of Sale for such products or in any separate agreement related to this document, MACOM assumes no liability whatsoever. MACOM assumes no responsibility for errors or omissions in these materials. MACOM may make changes to specifications and product descriptions at any time, without notice. MACOM makes no commitment to update the information and shall have no responsibility whatsoever for conflicts or incompatibilities arising from future changes to its specifications and product descriptions. No license, express or implied, by estoppels or otherwise, to any intellectual property rights is granted by this document.

THESE MATERIALS ARE PROVIDED "AS IS" WITHOUT WARRANTY OF ANY KIND, EITHER EXPRESS OR IMPLIED, RELATING TO SALE AND/OR USE OF MACOM PRODUCTS INCLUDING LIABILITY OR WARRANTIES RELATING TO FITNESS FOR A PARTICULAR PURPOSE, CONSEQUENTIAL OR INCIDENTAL DAMAGES, MERCHANTABILITY, OR INFRINGEMENT OF ANY PATENT, COPYRIGHT OR OTHER INTELLECTUAL PROPERTY RIGHT. MACOM FURTHER DOES NOT WARRANT THE ACCURACY OR COMPLETENESS OF THE INFORMATION, TEXT, GRAPHICS OR OTHER ITEMS CONTAINED WITHIN THESE MATERIALS. MACOM SHALL NOT BE LIABLE FOR ANY SPECIAL, INDIRECT, INCIDENTAL, OR CONSEQUENTIAL DAMAGES, INCLUDING WITHOUT LIMITATION, LOST REVENUES OR LOST PROFITS, WHICH MAY RESULT FROM THE USE OF THESE MATERIALS.

MACOM products are not intended for use in medical, lifesaving or life sustaining applications. MACOM customers using or selling MACOM products for use in such applications do so at their own risk and agree to fully indemnify MACOM for any damages resulting from such improper use or sale.