CapTouch Programmable Controller for Single-Electrode Capacitance Sensors

Data Sheet **AD7147**

FEATURES

Programmable capacitance-to-digital converter (CDC)
- **Femtofarad resolution**
- **13 capacitance sensor inputs**
- **9 ms update rate, all 13 sensor inputs**
- **No external RC components required**
- **Automatic conversion sequencer**

On-chip automatic calibration logic
- **Automatic compensation for environmental changes**
- **Automatic adaptive threshold and sensitivity levels**

Register map is compatible with the AD7142
On-chip RAM to store calibration data
SPI-compatible (serial-peripheral-interface-compatible) serial interface (AD7147)
I²C-compatible serial interface (AD7147-1)
Separate V_{DRIVE} level for serial interface
Interrupt output and general-purpose input/output (GPIO)
24-lead, 4 mm × 4 mm LFCSP
2.6 V to 3.3 V supply voltage
Low operating current
- **Full power mode: 1 mA**
- **Low power mode: 21.5 µA**

Qualified for automotive applications

APPLICATIONS

Cell phones
Personal music and multimedia players
Smart handheld devices
Television, A/V, and remote controls
Gaming consoles
Digital still cameras

GENERAL DESCRIPTION

The AD7147 CapTouch™ controller is designed for use with capacitance sensors implementing functions such as buttons, scroll bars, and wheels. The sensors need only one PCB layer, enabling ultrathin applications.

The AD7147 is an integrated CDC with on-chip environmental calibration. The CDC has 13 inputs channeled through a switch matrix to a 16-bit, 250 kHz sigma-delta (Σ-Δ) converter. The CDC is capable of sensing changes in the capacitance of the external sensors and uses this information to register a sensor activation. By programming the registers, the user has full control over the CDC setup.

High resolution sensors require minor software to run on the host processor.

FUNCTIONAL BLOCK DIAGRAM

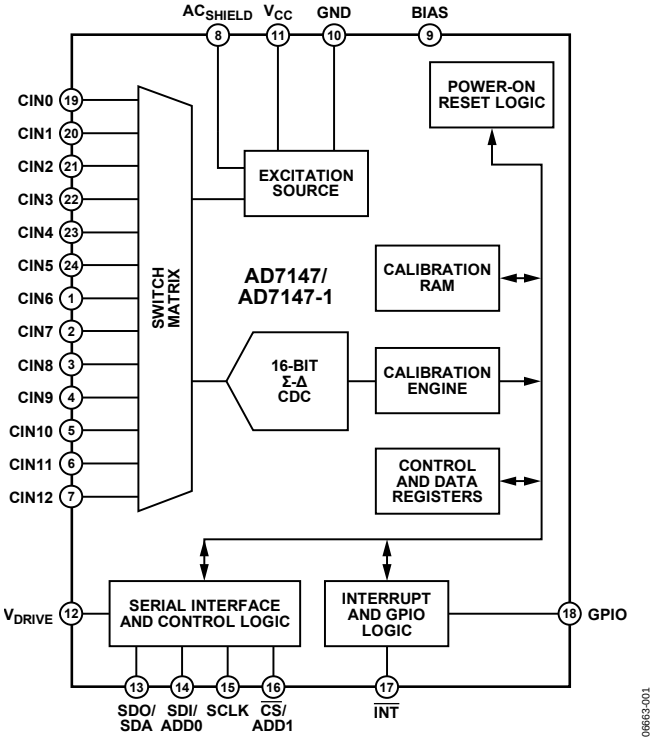

Figure 1.

The AD7147 is designed for single electrode capacitance sensors (grounded sensors). There is an active shield output to minimize noise pickup in the sensor.

The AD7147 has on-chip calibration logic to compensate for changes in the ambient environment. The calibration sequence is performed automatically and at continuous intervals as long as the sensors are not touched. This ensures that there are no false or nonregistering touches on the external sensors due to a changing environment.

The AD7147 has an SPI-compatible serial interface, and the AD7147-1 has an I²C®-compatible serial interface. Both parts have an interrupt output, as well as a GPIO. There is a V_{DRIVE} pin to set the voltage level for the serial interface independent of V_{CC}.

The AD7147 is available in a 24-lead, 4 mm × 4 mm LFCSP and operates from a 2.6 V to 3.6 V supply. The operating current consumption in low power mode is typically 26 µA for 13 sensors.

Rev. E **Document Feedback**
Information furnished by Analog Devices is believed to be accurate and reliable. However, no responsibility is assumed by Analog Devices for its use, nor for any infringements of patents or other rights of third parties that may result from its use. Specifications subject to change without notice. No license is granted by implication or otherwise under any patent or patent rights of Analog Devices. Trademarks and registered trademarks are the property of their respective owners.

One Technology Way, P.O. Box 9106, Norwood, MA 02062-9106, U.S.A.
Tel: 781.329.4700 **©2007–2015 Analog Devices, Inc. All rights reserved.**
Technical Support **www.analog.com**

TABLE OF CONTENTS

Features ... 1
Applications ... 1
General Description ... 1
Functional Block Diagram ... 1
Revision History ... 3
Specifications ... 4
  Average Current Specifications ... 5
  SPI Timing Specifications (AD7147) ... 6
  I²C Timing Specifications (AD7147-1) ... 7
Absolute Maximum Ratings ... 8
  ESD Caution ... 8
Pin Configurations and Function Descriptions ... 9
Typical Performance Characteristics ... 10
Theory of Operation ... 12
  Capacitance Sensing Theory ... 12
  BIAS Pin ... 13
  Operating Modes ... 13
Capacitiance-to-Digital Converter ... 15
  Oversampling the CDC Output ... 15
  Capacitance Sensor Offset Control ... 15
  Conversion Sequencer ... 15
  CDC Conversion Sequence Time ... 17
  CDC Conversion Results ... 17
Capacitance Sensor Input Configuration ... 18
  CINx Input Multiplexer Setup ... 18
  Single-Ended Connections to the CDC ... 18
Noncontact Proximity Detection ... 19
  Recalibration ... 19
  Proximity Sensitivity ... 19
  FF_SKIP_CNT ... 22
Environmental Calibration ... 24
  Capacitance Sensor Behavior Without Calibration ... 24
  Threshold Equations ... 25
  Capacitance Sensor Behavior with Calibration ... 25
  Slow FIFO ... 25
  SLOW_FILTER_UPDATE_LVL ... 26
Adaptive Threshold and Sensitivity ... 27
Interrupt Output ... 29
  CDC Conversion-Complete Interrupt ... 29
  Sensor-Touch Interrupt ... 29
  GPIO $\overline{\text{INT}}$ Output Control ... 31
Outputs ... 33
  AC_{SHIELD} Output ... 33
  General-Purpose Input/Output (GPIO) ... 33
  Using the GPIO to Turn On/Off an LED ... 33
Serial Interface ... 34
  SPI Interface ... 34
  I²C-Compatible Interface ... 36
  V_{DRIVE} Input ... 38
PCB Design Guidelines ... 39
  Capacitive Sensor Board Mechanical Specifications ... 39
  Chip Scale Packages ... 39
Power-Up Sequence ... 40
Typical Application Circuits ... 41
Register Map ... 42
Detailed Register Descriptions ... 43
  Bank 1 Registers ... 43
  Bank 2 Registers ... 53
  Bank 3 Registers ... 58
Outline Dimensions ... 70
  Ordering Guide ... 70
  Automotive Products ... 70

REVISION HISTORY

1/15—Rev. D to Rev. E

Updated Outline Dimensions....70
Changes to Ordering Guide....70

9/11—Rev. C to Rev. D

Changes to Ordering Guide....70

5/11—Rev. B to Rev. C

Changes to Features Section....1
Changes to Ordering Guide....70
Added Automotive Products Section....70

7/09—Rev. A to Rev. B

Changes to BIAS Pin Description....8
Changes to BIAS Pin Section....12

8/08—Rev. 0 to Rev. A

Changes to Table 3....4
Added Figure 3, Renumbered Sequentially....6
Changes to Low Power Mode Section....13
Added Latency from Touch to Response Section....13
Added Low Latency from Touch to Response Section....13
Changes to Figure 60 and Figure 61....40
Changes to Figure 62....41
Added Exposed Pad Notation to Outline Dimensions....68

9/07—Revision 0: Initial Version

SPECIFICATIONS

V_{CC} = 2.6 V to 3.6 V, T_A = −40°C to +85°C, unless otherwise noted.

Table 1.

Parameter	Min	Typ	Max	Unit	Test Conditions/Comments
CAPACITANCE-TO-DIGITAL CONVERTER					
Update Rate	8.73	9	9.27	ms	12 conversion stages, decimation = 64
	17.46	18	18.54	ms	12 conversion stages, decimation = 128
	34.9	36	37.1	ms	12 conversion stages, decimation = 256
Resolution		16		Bits	
CINx Input Range		±8		pF	
No Missing Codes	16			Bits	Guaranteed by design, but not production tested
CINx Input Leakage		25		nA	
Maximum Output Load			20	pF	Capacitance load on CINx to ground
Total Unadjusted Error			±20	%	
Output Noise (Peak-to-Peak)		12		Codes	Decimation rate = 64
		7		Codes	Decimation rate = 128
		3		Codes	Decimation rate = 256
Output Noise (RMS)		1.1		Codes	Decimation rate = 64
		0.8		Codes	Decimation rate = 128
		0.5		Codes	Decimation rate = 256
C_{STRAY} Offset Range		20		pF	
C_{STRAY} Offset Resolution		0.32		pF	
Low Power Mode Delay Accuracy			4	%	Percentage of 200 ms, 400 ms, 600 ms, or 800 ms
AC_{SHIELD}					
Frequency		250		kHz	
Output Voltage	0		V_{CC}	V	Oscillating
Short-Circuit Source Current		10		mA	
Short-Circuit Sink Current		10		mA	
Maximum Output Load			150	pF	Capacitance load on AC_{SHIELD} to ground
LOGIC INPUTS (SDI, SCLK, $\overline{CS}$, SDA, GPIO)					
V_{IH} Input High Voltage	0.7 × V_{DRIVE}			V	
V_{IL} Input Low Voltage			0.4	V	
I_{IH} Input High Current	−1			µA	V_{IN} = V_{DRIVE}
I_{IL} Input Low Current			1	µA	V_{IN} = GND
Hysteresis		150		mV	
OPEN-DRAIN OUTPUTS (SCLK, SDA, $\overline{INT}$)					
V_{OL} Output Low Voltage			0.4	V	I_{SINK} = −1 mA
I_{OH} Output High Leakage Current		±0.1	±1	µA	V_{OUT} = V_{DRIVE}
LOGIC OUTPUTS (SDO, GPIO)					
V_{OL} Output Low Voltage			0.4	V	I_{SINK} = 1 mA, V_{DRIVE} = 1.65 V to 3.6 V
V_{OH} Output High Voltage	V_{DRIVE} − 0.6			V	I_{SOURCE} = 1 mA, V_{DRIVE} = 1.65 V to 3.6 V
GPIO, SDO Floating State Leakage Current			±1	µA	Pin three-state, leakage measured to GND and V_{CC}
POWER					
V_{CC}	2.6	3.3	3.6	V	
V_{DRIVE}	1.65		3.6	V	Serial interface operating voltage
I_{CC}		0.9	1	mA	In full power mode, V_{CC} + V_{DRIVE}
		15.5	21.5	µA	Low power mode, converter idle, V_{CC} + V_{DRIVE}, decimation = 256
		2.3	7.5	µA	Full shutdown, V_{CC} + V_{DRIVE}

AVERAGE CURRENT SPECIFICATIONS

Table 2. Typical Average Current in Low Power Mode[1]

Low Power Mode Delay	Decimation Rate	Current Values of Conversion Stages (μA)											
		1	2	3	4	5	6	7	8	9	10	11	12
200 ms	64	20.83	24.18	27.52	30.82	34.11	37.37	40.6	43.81	46.99	50.16	53.3	56.41
	128	25.3	31.92	38.45	44.87	51.21	57.45	63.6	69.66	75.63	81.52	87.33	93.05
	256	34.11	46.99	59.51	71.66	83.47	94.94	106.1	116.96	127.52	137.81	147.82	157.58
400 ms	64	18.17	19.86	21.55	23.23	24.9	26.57	28.23	29.88	31.53	33.17	34.81	36.44
	128	20.43	23.79	27.12	30.43	33.72	36.98	40.22	43.43	46.62	49.78	52.93	56.05
	256	24.9	31.53	38.06	44.5	50.83	57.08	63.23	69.3	75.28	81.17	86.98	92.71
600 ms	64	17.28	18.41	19.54	20.67	21.79	22.91	24.03	25.14	26.25	27.36	28.47	29.57
	128	18.79	21.04	23.28	25.51	27.73	29.94	32.13	34.32	36.49	38.65	40.81	42.95
	256	21.79	26.25	30.67	35.04	39.37	43.66	47.9	52.11	56.27	60.39	64.47	68.51
800 ms	64	16.84	17.69	18.53	19.38	20.23	21.07	21.91	22.75	23.59	24.43	25.26	26.09
	128	17.97	19.66	21.35	23.03	24.7	26.37	28.03	29.69	31.34	32.98	34.62	36.25
	256	20.23	23.59	26.93	30.24	33.53	36.79	40.03	43.24	46.43	49.6	52.74	55.86

[1] V_{CC} = 3.3 V, T_A = 25°C, load = 50 pF.

Table 3. Maximum Average Current in Low Power Mode[1]

Low Power Mode Delay	Decimation Rate	Current Values of Conversion Stages (μA)											
		1	2	3	4	5	6	7	8	9	10	11	12
200 ms	64	27.96	32.06	36.12	40.15	44.16	48.12	52.06	55.97	59.85	63.69	67.51	71.29
	128	33.41	41.49	49.44	57.26	64.97	72.55	80.02	87.37	94.61	101.74	108.77	115.69
	256	44.16	59.85	75.05	89.79	104.09	117.97	131.45	144.53	157.25	169.61	181.63	193.33
400 ms	64	24.74	26.8	28.86	30.91	32.95	34.99	37.01	39.03	41.04	43.04	45.03	47.02
	128	27.49	31.59	35.66	39.7	43.71	47.68	51.62	55.53	59.41	63.26	67.08	70.87
	256	32.95	41.04	49	56.83	64.54	72.12	79.6	86.96	94.2	101.34	108.37	115.3
600 ms	64	23.66	25.04	26.42	27.79	29.17	30.53	31.89	33.25	34.61	35.96	37.31	38.66
	128	25.5	28.25	30.99	33.71	36.41	39.1	41.78	44.44	47.09	49.72	52.34	54.95
	256	29.17	34.61	40	45.33	50.6	55.82	60.98	66.09	71.15	76.15	81.1	86.01
800 ms	64	23.12	24.16	25.19	26.23	27.26	28.29	29.32	30.34	31.36	32.38	33.4	34.42
	128	24.5	26.57	28.63	30.68	32.72	34.76	36.79	38.8	40.81	42.81	44.81	46.79
	256	27.26	31.36	35.44	39.47	43.48	47.46	51.4	55.31	59.19	63.04	66.86	70.66

[1] V_{CC} = 3.6 V, T_A = −40°C to +85°C, load = 50 pF.

SPI TIMING SPECIFICATIONS (AD7147)

T_A = −40°C to +85°C, sample tested at 25°C to ensure compliance. V_{DRIVE} = 1.65 V to 3.6 V, and V_{CC} = 2.6 V to 3.6 V, unless otherwise noted. All input signals are specified with $t_R = t_F$ = 5 ns (10% to 90% of V_{CC}) and timed from a voltage level of 1.6 V.

Table 4. SPI Timing Specifications

Parameter	Limit	Unit	Description
f_{SCLK}	5	MHz max	SCLK frequency
t_1	5	ns min	$\overline{CS}$ falling edge to first SCLK falling edge
t_2	20	ns min	SCLK high pulse width
t_3	20	ns min	SCLK low pulse width
t_4	15	ns min	SDI setup time
t_5	15	ns min	SDI hold time
t_6	20	ns max	SDO access time after SCLK falling edge
t_7	16	ns max	$\overline{CS}$ rising edge to SDO high impedance
t_8	15	ns min	SCLK rising edge to $\overline{CS}$ high

SPI Timing Diagram

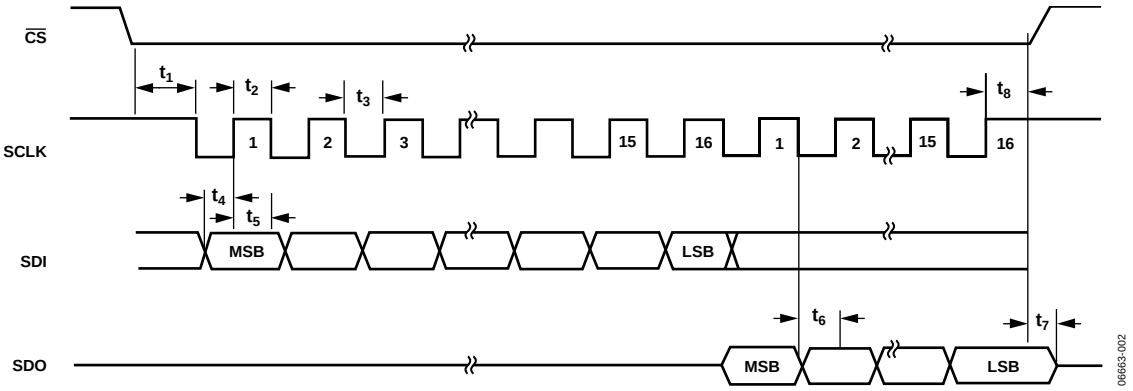

Figure 2. SPI Detailed Timing Diagram

I²C TIMING SPECIFICATIONS (AD7147-1)

T_A = −40°C to +85°C, sample tested at 25°C to ensure compliance. V_{DRIVE} = 1.65 V to 3.6 V, and V_{CC} = 2.6 V to 3.6 V, unless otherwise noted. All input signals timed from a voltage level of 1.6 V.

Table 5. I²C Timing Specifications[1]

Parameter	Limit	Unit	Description
f_{SCLK}	400	kHz max	
t_1	0.6	µs min	Start condition hold time, $t_{HD; STA}$
t_2	1.3	µs min	Clock low period, t_{LOW}
t_3	0.6	µs min	Clock high period, t_{HIGH}
t_4	100	ns min	Data setup time, $t_{SU; DAT}$
t_5	300	ns min	Data hold time, $t_{HD; DAT}$
t_6	0.6	µs min	Stop condition setup time, $t_{SU; STO}$
t_7	0.6	µs min	Start condition setup time, $t_{SU; STA}$
t_8	1.3	µs min	Bus-free time between stop and start conditions, t_{BUF}
t_R	300	ns max	Clock/data rise time
t_F	300	ns max	Clock/data fall time

[1] Guaranteed by design, not production tested.

I²C Timing Diagram

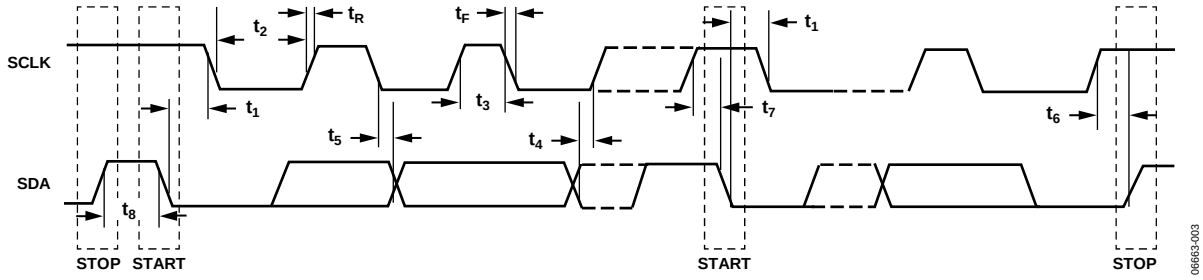

Figure 3. I²C Detailed Timing Diagram

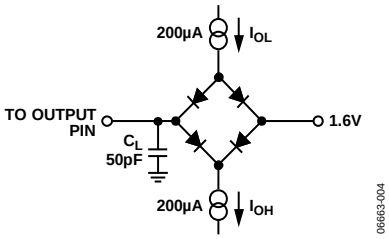

Figure 4. Load Circuit for Digital Output Timing Specifications

ABSOLUTE MAXIMUM RATINGS

Table 6.

Parameter	Rating
V_{CC} to GND	−0.3 V to +3.6 V
Analog Input Voltage to GND	−0.3 V to V_{CC} + 0.3 V
Digital Input Voltage to GND	−0.3 V to V_{DRIVE} + 0.3 V
Digital Output Voltage to GND	−0.3 V to V_{DRIVE} + 0.3 V
Input Current to Any Pin Except Supplies[1]	10 mA
ESD Rating (Human Body Model)	2.5 kV
Operating Temperature Range	−40°C to +105°C
Storage Temperature Range	−65°C to +150°C
Junction Temperature	150°C
LFCSP	
Power Dissipation	450 mW
θ_{JA} Thermal Impedance	135.7°C/W
IR Reflow Peak Temperature	260°C (±0.5°C)
Lead Temperature (Soldering 10 sec)	300°C

[1] Transient currents of up to 100 mA do not cause SCR latch-up.

Stresses at or above those listed under Absolute Maximum Ratings may cause permanent damage to the product. This is a stress rating only; functional operation of the product at these or any other conditions above those indicated in the operational section of this specification is not implied. Operation beyond the maximum operating conditions for extended periods may affect product reliability.

ESD CAUTION

ESD (electrostatic discharge) sensitive device. Charged devices and circuit boards can discharge without detection. Although this product features patented or proprietary protection circuitry, damage may occur on devices subjected to high energy ESD. Therefore, proper ESD precautions should be taken to avoid performance degradation or loss of functionality.

PIN CONFIGURATIONS AND FUNCTION DESCRIPTIONS

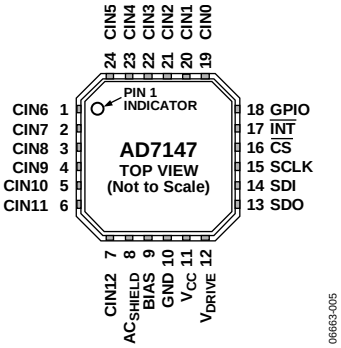

NOTES
1. THE EXPOSED PAD IS NOT CONNECTED INTERNALLY. FOR INCREASED RELIABILITY OF THE SOLDER JOINTS AND MAXIMUM THERMAL CAPABILITY IT IS RECOMMENDED THAT THE PAD BE SOLDERED TO THE GROUND PLANE.

Figure 5. AD7147 Pin Configuration

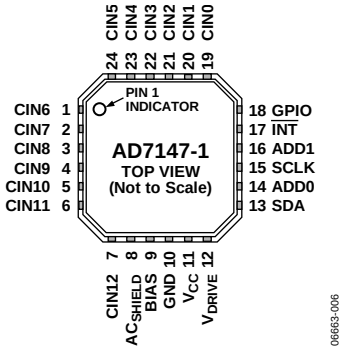

NOTES
1. THE EXPOSED PAD IS NOT CONNECTED INTERNALLY. FOR INCREASED RELIABILITY OF THE SOLDER JOINTS AND MAXIMUM THERMAL CAPABILITY IT IS RECOMMENDED THAT THE PAD BE SOLDERED TO THE GROUND PLANE.

Figure 6. AD7147-1 Pin Configuration

Table 7. Pin Function Descriptions

Pin No.			
AD7147	**AD7147-1**	**Mnemonic**	**Description**
1	1	CIN6	Capacitance Sensor Input.
2	2	CIN7	Capacitance Sensor Input.
3	3	CIN8	Capacitance Sensor Input.
4	4	CIN9	Capacitance Sensor Input.
5	5	CIN10	Capacitance Sensor Input.
6	6	CIN11	Capacitance Sensor Input.
7	7	CIN12	Capacitance Sensor Input.
8	8	AC_{SHIELD}	CDC Active Shield Output. Connect to external shield or plane.
9	9	BIAS	Bias Node for Internal Circuitry. Requires 100 nF capacitor to ground.
10	10	GND	Ground Reference Point for All Circuitry.
11	11	V_{CC}	Supply Voltage.
12	12	V_{DRIVE}	Serial Interface Operating Voltage Supply.
13	N/A	SDO	SPI Serial Data Output.
N/A	13	SDA	I^2C Serial Data Input/Output. SDA requires pull-up resistor.
14	N/A	SDI	SPI Serial Data Input.
N/A	14	ADD0	I^2C Address Bit 0.
15	15	SCLK	Clock Input for Serial Interface.
16	N/A	$\overline{CS}$	SPI Chip Select Signal.
N/A	16	ADD1	I^2C Address Bit 1.
17	17	$\overline{INT}$	General-Purpose Open-Drain Interrupt Output. Programmable polarity; requires pull-up resistor.
18	18	GPIO	Programmable GPIO.
19	19	CIN0	Capacitance Sensor Input.
20	20	CIN1	Capacitance Sensor Input.
21	21	CIN2	Capacitance Sensor Input.
22	22	CIN3	Capacitance Sensor Input.
23	23	CIN4	Capacitance Sensor Input.
24	24	CIN5	Capacitance Sensor Input.

TYPICAL PERFORMANCE CHARACTERISTICS

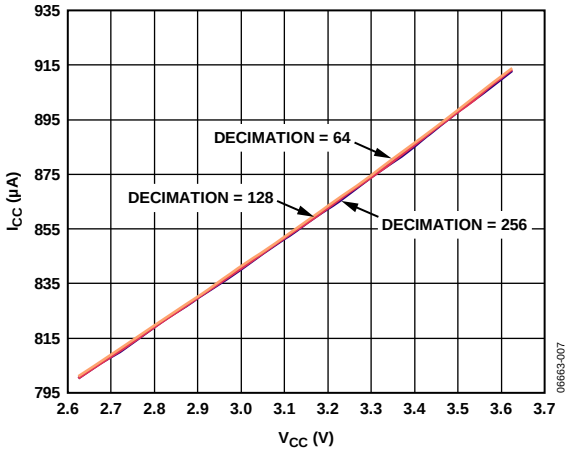

Figure 7. Supply Current vs. Supply Voltage

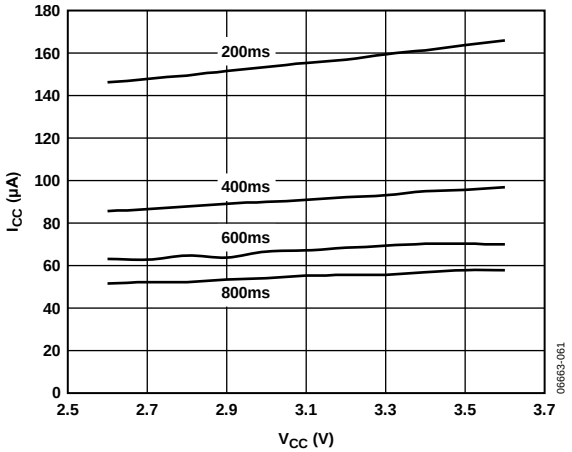

Figure 8. Low Power Supply Current vs. Supply Voltage, Decimation Rate = 256

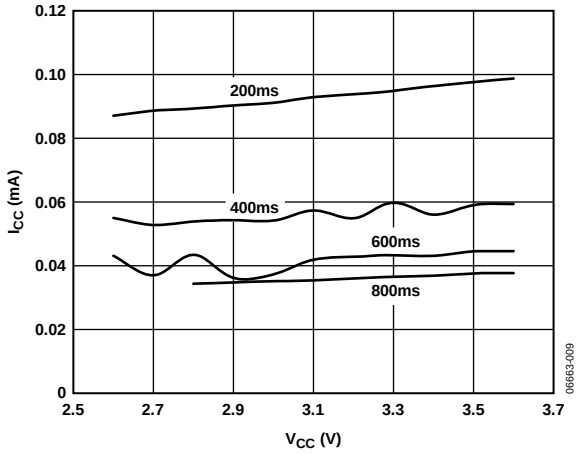

Figure 9. Low Power Supply Current vs. Supply Voltage, Decimation Rate = 128

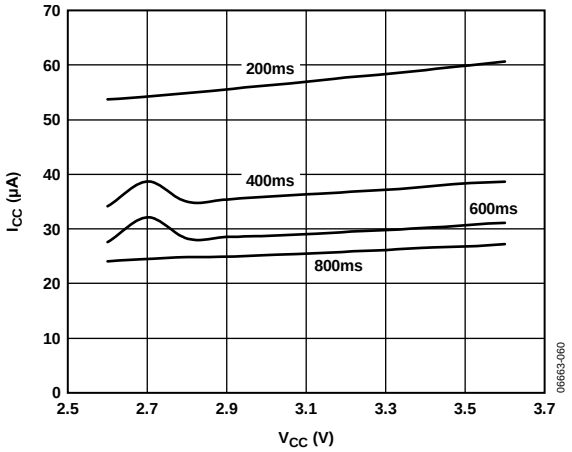

Figure 10. Low Power Supply Current vs. Supply Voltage, Decimation Rate = 64

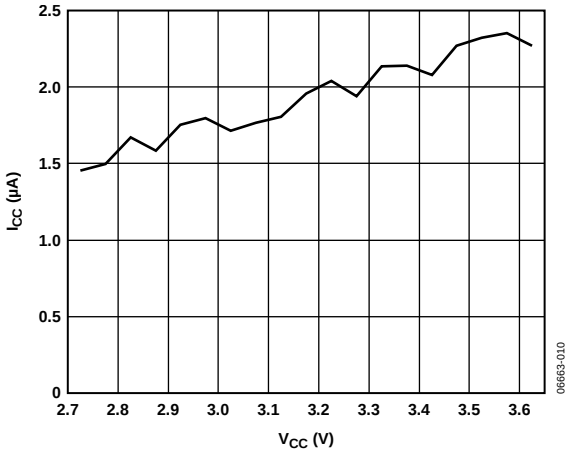

Figure 11. Shutdown Supply Current vs. Supply Voltage

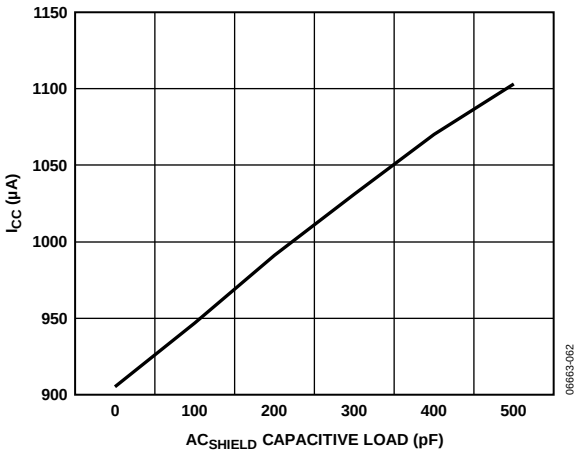

Figure 12. Supply Current vs. Capacitive Load on AC_{SHIELD}

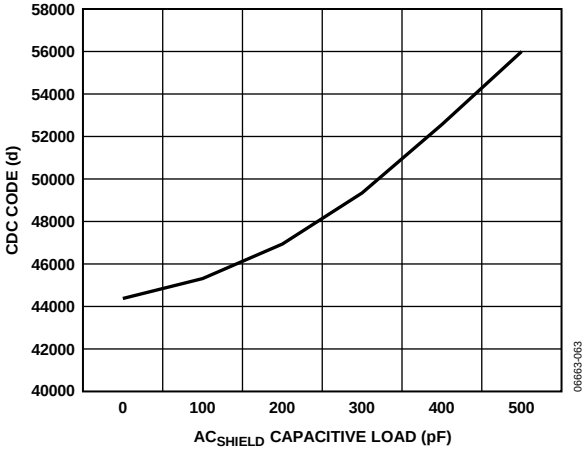

Figure 13. Output Code vs. Capacitive Load on AC_{SHIELD}

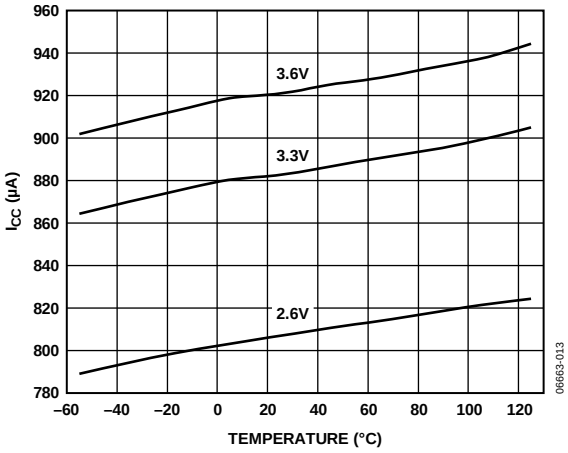

Figure 14. Supply Current vs. Temperature

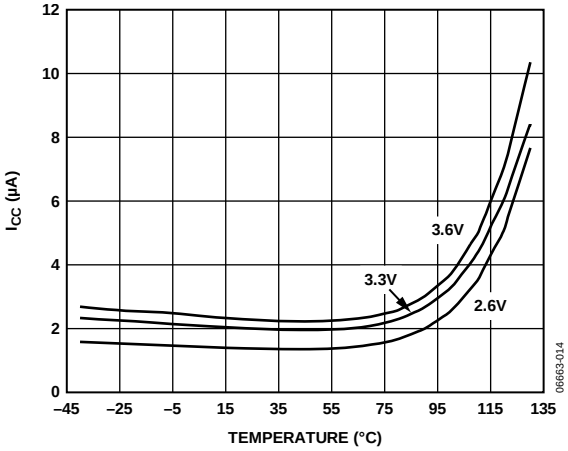

Figure 15. Shutdown Supply Current vs. Temperature

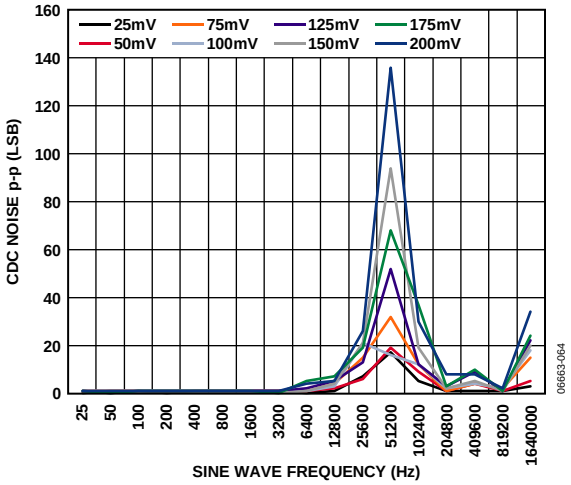

Figure 16. Power Supply Sine Wave Rejection, V_{CC} = 3.6 V

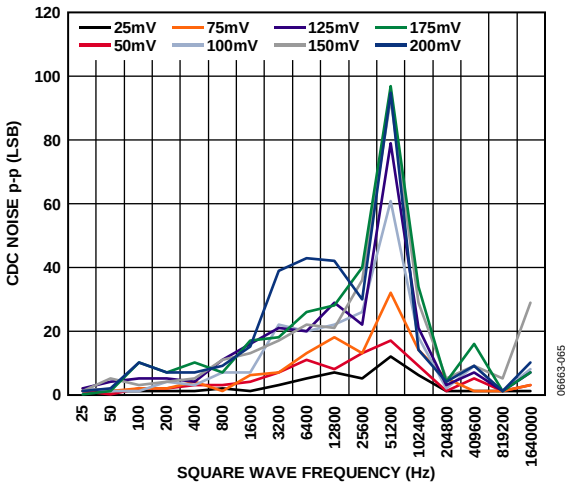

Figure 17. Power Supply Square Wave Rejection, V_{CC} = 3.6 V

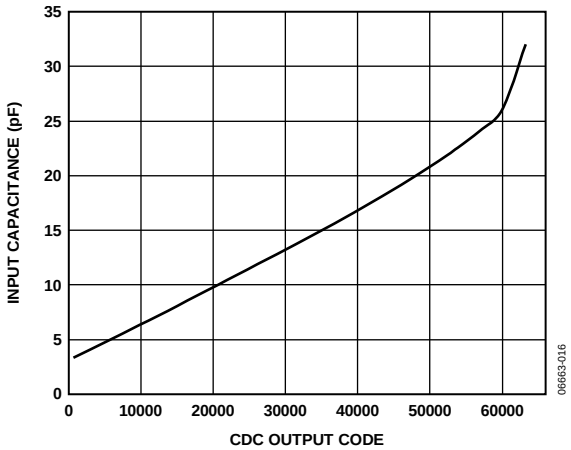

Figure 18. CDC Linearity, V_{CC} = 3.3 V

THEORY OF OPERATION

The AD7147 and AD7147-1 are CDCs with on-chip environmental compensation. They are intended for use in portable systems requiring high resolution user input. The internal circuitry consists of a 16-bit, Σ-Δ converter that can change a capacitive input signal into a digital value. There are 13 input pins, CIN0 to CIN12, on the AD7147 or AD7147-1. A switch matrix routes the input signals to the CDC. The result of each capacitance-to-digital conversion is stored in on-chip registers. The host subsequently reads the results over the serial interface. The AD7147 has an SPI interface, and the AD7147-1 has an I^2C interface, ensuring that the parts are compatible with a wide range of host processors. AD7147 refers to both the AD7147 and AD7147-1, unless otherwise noted, from this point forward in this data sheet.

The AD7147 interfaces with up to 13 external capacitance sensors. These sensors can be arranged as buttons, scroll bars, or wheels, or as a combination of sensor types. The external sensors consist of an electrode on a single- or multiple-layer PCB that interfaces directly to the AD7147.

The AD7147 can be set up to implement any set of input sensors by programming the on-chip registers. The registers can also be programmed to control features such as averaging, offsets, and gains for each of the external sensors. There is an on-chip sequencer that controls how each of the capacitance inputs is polled.

The AD7147 has on-chip digital logic and 528 words of RAM that are used for environmental compensation. The effects of humidity, temperature, and other environmental factors can affect the operation of capacitance sensors. Transparent to the user, the AD7147 performs continuous calibration to compensate for these effects, allowing the AD7147 to consistently provide error-free results.

The AD7147 requires a companion algorithm that runs on the host or another microcontroller to implement high resolution sensor functions, such as scroll bars or wheels. However, no companion algorithm is required to implement buttons. Button sensors are implemented on chip, entirely in digital logic.

The AD7147 can be programmed to operate in either full power mode or low power automatic wake-up mode. The automatic wake-up mode is particularly suited for portable devices that require low power operation to provide the user with significant power savings and full functionality.

The AD7147 has an interrupt output, $\overline{INT}$, to indicate when new data has been placed into the registers. $\overline{INT}$ is used to interrupt the host on sensor activation. The AD7147 operates from a 2.6 V to 3.6 V supply and is available in a 24-lead, 4 mm × 4 mm LFCSP.

CAPACITANCE SENSING THEORY

The AD7147 measures capacitance changes from single electrode sensors. The sensor electrode on the PCB comprises one plate of a virtual capacitor. The other plate of the capacitor is the user's finger, which is grounded with respect to the sensor input.

The AD7147 first outputs an excitation signal to charge the plate of the capacitor. When the user comes close to the sensor, the virtual capacitor is formed, with the user acting as the second capacitor plate.

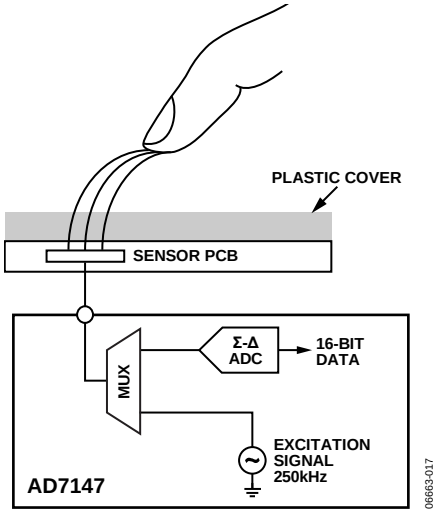

Figure 19. Capacitance-Sensing Method

A square wave excitation signal is applied to CINx during the conversion, and the modulator continuously samples the charge going through CINx. The output of the modulator is processed via a digital filter, and the resulting digital data is stored in the CDC_RESULT_Sx registers for each conversion stage, at Address 0x00B to Address 0x016.

Registering a Sensor Activation

When a user approaches a sensor, the total capacitance associated with that sensor changes and is measured by the AD7147. If the change causes a set threshold to be exceeded, the AD7147 interprets this as a sensor activation.

On-chip threshold limits are used to determine when a sensor activation occurs. Figure 20 shows the change in CDC_RESULT_Sx when a user activates a sensor. The sensor is deemed to be active only when the value of CDC_RESULT_Sx is either greater than the value of STAGEx_HIGH_THRESHOLD or less than the value of STAGEx_LOW_THRESHOLD.

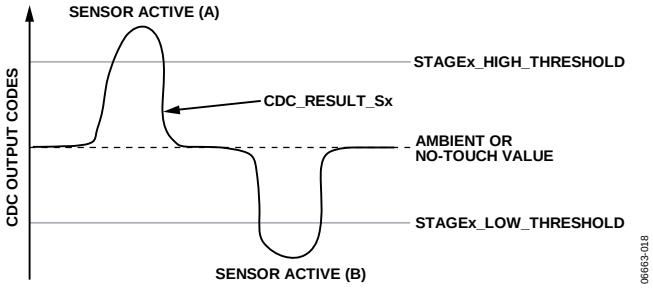

Figure 20. Sensor Activation Thresholds

In Figure 20, two sensor activations are shown. Sensor Active A occurs when a sensor is connected to the positive input of the converter. In this case, when a user activates the sensor, there is an increase in CDC code, and the value of CDC_RESULT_Sx exceeds that of STAGEx_HIGH_THRESHOLD. Sensor Active B occurs when the sensor is connected to the negative input of the converter. In this case, when a user activates the sensor, there is a decrease in CDC code, and the value of CDC_RESULT_Sx becomes less than the value of STAGEx_LOW_THRESHOLD.

For each conversion stage, the STAGEx_HIGH_THRESHOLD and STAGEx_LOW_THRESHOLD registers are in Register Bank 3. The values in these registers are updated automatically by the AD7147 due to its environmental calibration and adaptive threshold logic.

At power-up, the values in the STAGEx_HIGH_THRESHOLD and STAGEx_LOW_THRESHOLD registers are the same as those in the STAGEx_OFFSET_HIGH and STAGEx_OFFSET_LOW registers in Bank 2. The user must program the STAGEx_OFFSET _HIGH and STAGEx_OFFSET_LOW registers on device power-up. See the Environmental Calibration section of the data sheet for more information.

Complete Solution for Capacitance Sensing

Analog Devices, Inc., provides a complete solution for capacitance sensing. The two main elements to the solution are the sensor PCB and the AD7147.

If the application requires high resolution sensors such as scroll bars or wheels, software is required that runs on the host processor. The memory requirements for the host depend on the sensor and are typically 10 kB of code and 600 bytes of data memory, depending on the sensor type.

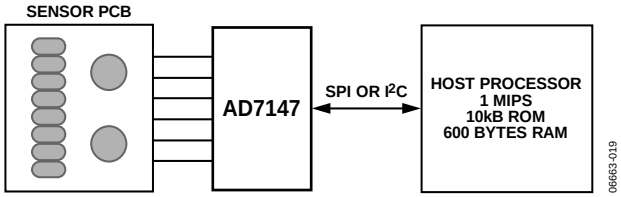

Figure 21. Three-Part Capacitance Sensing Solution

Analog Devices supplies the sensor PCB footprint design libraries to the customer and supplies any necessary software on an open source basis.

BIAS PIN

This pin is connected internally to a bias node of the AD7147. To ensure correct operation of the AD7147, connect a 100 nF capacitor between the BIAS pin and ground. The voltage seen at the BIAS pin is $V_{CC}/2$.

OPERATING MODES

The AD7147 has three operating modes. Full power mode, where the device is always fully powered, is suited for applications where power is not a concern (for example, game consoles that have an ac power supply). Low power mode, where the part automatically powers down when no sensor is active, is tailored to provide significant power savings compared with full power mode and is suited for mobile applications, where power must be conserved. In shutdown mode, the part shuts down completely.

The POWER_MODE bits (Bit 0 and Bit 1) of the control register set the operating mode on the AD7147. The control register is at Address 0x000. Table 8 shows the POWER_MODE settings for each operating mode. To put the AD7147 into shutdown mode, set the POWER_MODE bits to either 01 or 11.

Table 8. POWER_MODE Settings

POWER_MODE Bits	Operating Mode
00	Full power mode
01	Shutdown mode
10	Low power mode
11	Shutdown mode

The power-on default setting of the POWER_MODE bits is 00, full power mode.

Full Power Mode

In full power mode, all sections of the AD7147 remain fully powered and converting at all times. While a sensor is being touched, the AD7147 processes the sensor data. If no sensor is touched, the AD7147 measures the ambient capacitance level and uses this data for the on-chip compensation routines. In full power mode, the AD7147 converts at a constant rate. See the CDC Conversion Sequence Time section for more information.

Low Power Mode

When AD7147 is in low power mode, the POWER_MODE bits are set to 10 upon device initialization. If the external sensors are not touched, the AD7147 reduces its conversion frequency, thereby greatly reducing its power consumption. The part remains in a reduced power state while the sensors are not touched. The AD7147 performs a conversion after a delay defined by the LP_CONV_DELAY bits, and it uses this data to update the compensation logic and check if the sensors are active. The LP_CONV_DELAY bits set the delay between conversions to 200 ms, 400 ms, 600 ms, or 800 ms.

In low power mode, the total current consumption of the AD7147 is an average of the current used during a conversion and the current used while the AD7147 is waiting for the next conversion to begin. For example, when LP_CONV_DELAY is 400 ms, the AD7147 typically uses 0.85 mA of current for 36 ms and 14 µA of current for 400 ms during the conversion interval. (Note that these conversion timings can be altered through the register settings. See the CDC Conversion Sequence Time section for more information.)

The time for the AD7147 to transition from a full power state to a reduced power state after the user stops touching the external sensors is configurable. The PWR_DOWN_TIMEOUT bits (in the Ambient Compensation Control 0 (AMB_COMP_CTRL0) Register at Address 0x002) control the time delay before the AD7147 transitions to the reduced power state after the user stops touching the sensors.

Latency from Touch to Response

In low power mode, the AD7147 remains in a low power state until any one of the external sensors are touched. When a sensor is touched, the AD7147 begins a conversion sequence every 36 ms to read back data from the sensors. This means that the latency between the user touching the sensor, and the AD7147 responding, is a maximum of LP_CONV_DELAY ms.

Low Latency from Touch to Response

In low power mode, the AD7147P model remains in a low power state until proximity is detected on any one of the external sensors. When proximity is detected, the AD714P begins a conversion sequence every 36 ms, or 18 ms, or 9 ms to read back data from the sensors. The latency between first touch and the AD7147P responding is much reduced, compared to the AD7147, because the part is already in a full power state by the time the user has touched the sensor.

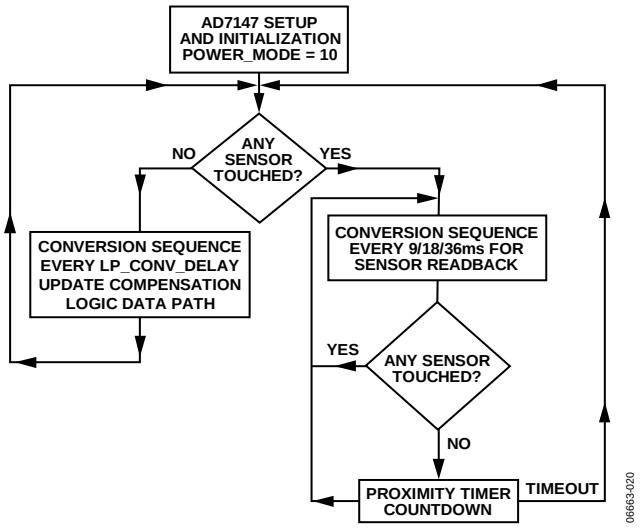

Figure 22. Low Power Mode Operation, AD7147

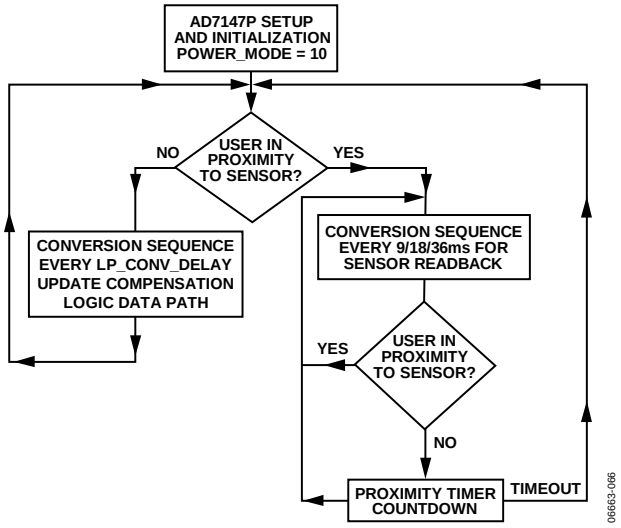

Figure 23. Low Power Mode Operation, AD7147P

CAPACITIANCE-TO-DIGITAL CONVERTER

The capacitance-to-digital converter on the AD7147 has a Σ-Δ architecture with 16-bit resolution. There are 13 possible inputs to the CDC that are connected to the input of the converter through a switch matrix. The sampling frequency of the CDC is 250 kHz.

OVERSAMPLING THE CDC OUTPUT

The decimation rate, or oversampling ratio, is determined by Bits[9:8] of the power control (PWR_CONTROL) register (Address 0x000), as listed in Table 9.

Table 9. CDC Decimation Rate

Decimation Bits	Decimation Rate	CDC Output Rate Per Stage (ms)
00	256	3.072
01	128	1.536
10	64	0.768
11	64	0.768

The decimation process on the AD7147 is an averaging process, where a number of samples are taken and the averaged result is output. Due to the architecture of the digital filter employed, the number of samples taken (per stage) is equal to 3× the decimation rate. So 3 × 256 or 3 × 128 samples are averaged to obtain each stage result.

The decimation process reduces the amount of noise present in the final CDC result. However, the higher the decimation rate, the lower the output rate per stage; therefore, there is a trade-off possible between the amount of noise in the signal and the speed of sampling.

CAPACITANCE SENSOR OFFSET CONTROL

There are two programmable DACs on board the AD7147 to null the effect of any stray capacitances on the CDC measurement. These offsets are due to stray capacitance to ground.

A simplified block diagram in Figure 24 shows how to apply the STAGEx_AFE_OFFSET registers to null the offsets. The 6-bit POS_AFE_OFFSET and NEG_AFE_OFFSET bits program the offset DAC to provide 0.32 pF resolution offset adjustment over a range of 20 pF.

The best practice is to ensure that the CDC output for any stage is approximately equal to midscale (~32,700) when all sensors are inactive. To correctly offset the stray capacitance to ground for each stage, use the following procedure:

1. Read back the CDC value from the CDC_RESULT_Sx register.
2. If this value is not close to midscale, increase the value of POS_AFE_OFFSET or NEG_AFE_OFFSET (depending on if the CINx input is connected to the positive or negative input of the converter) by 1. The CINx connections are determined by the STAGEx_CONNECTION registers.
3. If the CDC value in CDC_RESULT_Sx is now closer to midscale, repeat Step 2. If the CDC value is further from midscale, decrease the POS_AFE_OFFSET or NEG_AFE_OFFSET value by 1.

The goal is to ensure that the CDC_RESULT_Sx is as close to midscale as possible. This process is only required once during the initial capacitance sensor characterization.

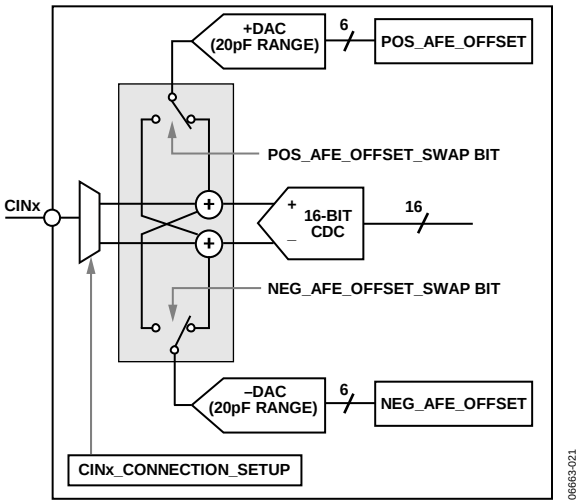

Figure 24. Analog Front-End Offset Control

CONVERSION SEQUENCER

The AD7147 has an on-chip sequencer to implement conversion control for the input channels. Up to 12 conversion stages can be performed in one sequence. Each of the 12 conversions stages can measure the input from a different sensor. By using the Bank 2 registers, each stage can be uniquely configured to support multiple capacitance sensor interface requirements. For example, a slider sensor can be assigned to STAGE1 through STAGE8, with a button sensor assigned to STAGE0. For each conversion stage, the input mux that connects the CINx inputs to the converter can have a unique setting.

The AD7147 on-chip sequence controller provides conversion control, beginning with STAGE0. Figure 25 shows a block diagram of the CDC conversion stages and CINx inputs. A conversion sequence is defined as a sequence of CDC conversions starting at STAGE0 and ending at the stage determined by the value programmed in the SEQUENCE_STAGE_NUM bits. Depending on the number and type of capacitance sensors that are used, not all conversion stages are required. Use the SEQUENCE_STAGE_NUM bits to set the number of conversions in one sequence. This number depends on the sensor interface requirements. For example, the register should be set to 5 if the CINx inputs are mapped to only six conversion stages. In addition, the STAGE_CAL_EN register should be set according to the number of stages that are used.

The number of required conversion stages depends solely on the number of sensors attached to the AD7147. Figure 26 shows how many conversion stages are required for each sensor and how many inputs to the AD7147 each sensor requires.

A button sensor generally requires one sequencer stage; this is shown in Figure 26 as B1. However, it is possible to configure two button sensors to operate differentially for one conversion stage. Only one button can be activated at a time; pressing both buttons simultaneously results in neither button being activated. The configuration with two button sensors operating differentially requires one conversion stage and is shown in Figure 26, with B2 and B3 representing the differentially configured button sensors.

A wheel sensor requires eight stages, whereas a slider requires two stages. The result from each stage is used by the host software to determine the user's position on the slider or wheel. The algorithms that perform this process are available from Analog Devices and are free of charge, but require signing a software license.

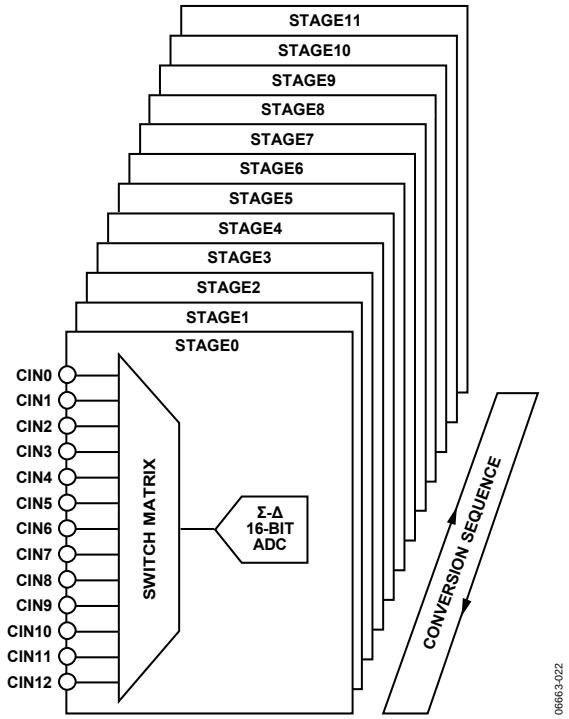

Figure 25. CDC Conversion Stages

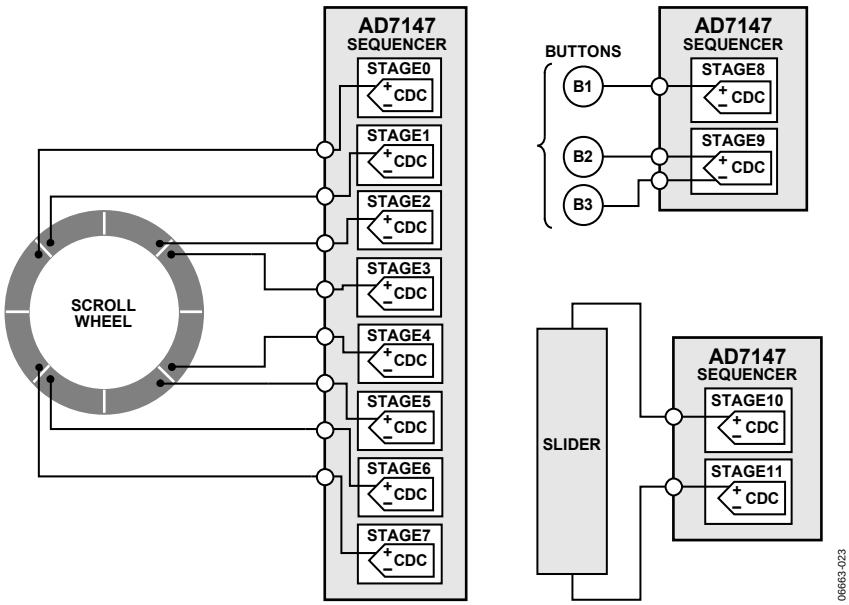

Figure 26. Sequencer Setup for Sensors

CDC CONVERSION SEQUENCE TIME

Table 10. CDC Conversion Times for Full Power Mode

	Conversion Time (ms)		
SEQUENCE_STAGE_NUM	Decimation = 64	Decimation = 128	Decimation = 256
0	0.768	1.536	3.072
1	1.536	3.072	6.144
2	2.304	4.608	9.216
3	3.072	6.144	12.288
4	3.84	7.68	15.36
5	4.608	9.216	18.432
6	5.376	10.752	21.504
7	6.144	12.288	24.576
8	6.912	13.824	27.648
9	7.68	15.36	30.72
10	8.448	16.896	33.792
11	9.216	18.432	36.864

The time required for the CDC to complete the measurement of all 12 stages is defined as the CDC conversion sequence time. The SEQUENCE_STAGE_NUM and DECIMATION bits determine the conversion time, as listed in Table 10.

For example, if the device is operated with a decimation rate of 128 and the SEQUENCE_STAGE_NUM bit is set to 5 for the conversion of six stages in a sequence, the conversion sequence time is 9.216 ms.

Full Power Mode CDC Conversion Sequence Time

The full power mode CDC conversion sequence time for all 12 stages is set by configuring the SEQUENCE_STAGE_NUM and DECIMATION bits as outlined in Table 10.

Figure 27 shows a simplified timing diagram of the full power mode CDC conversion time. The full power mode CDC conversion time (t_{CONV_FP}) is set using the values shown in Table 10.

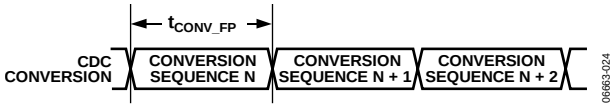

Figure 27. Full Power Mode CDC Conversion Sequence Time

Low Power Mode CDC Conversion Sequence Time with Delay

The frequency of each CDC conversion while operating in the low power automatic wake-up mode is controlled by using the LP_CONV_DELAY bits located at Address 0x000[3:2] in addition to the registers listed in Table 10. This feature provides some flexibility for optimizing the tradeoff between the conversion time needed to meet system requirements and the power consumption of the AD7147.

For example, maximum power savings is achieved when the LP_CONV_DELAY bits are set to 11. With a setting of 11, the AD7147 automatically wakes up, performing a conversion every 800 ms.

Table 11. LP_CONV_DELAY Settings

LP_CONV_DELAY Bits	Delay Between Conversions (ms)
00	200
01	400
10	600
11	800

Figure 28 shows a simplified timing example of the low power mode CDC conversion time. As shown, the low power mode CDC conversion time is set by t_{CONV_FP} and the LP_CONV_DELAY bits.

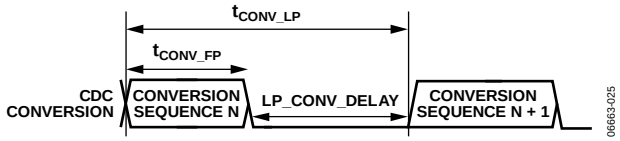

Figure 28. Low Power Mode CDC Conversion Sequence Time

CDC CONVERSION RESULTS

Certain high resolution sensors require the host to read back the CDC conversion results for processing. The registers required for host processing are located in the Bank 3 registers. The host processes the data read back from these registers using a software algorithm in order to determine position information.

In addition to the results registers in the Bank 3 registers, the AD7147 provides the 16-bit CDC output data directly, starting at Address 0x00B of Bank 1. Reading back the CDC 16-bit conversion data register allows for customer-specific application data processing.

CAPACITANCE SENSOR INPUT CONFIGURATION

Each input connection from the external capacitance sensors to the converter of the AD7147 can be uniquely configured by using the registers in Bank 2 (see Table 38). These registers are used to configure the input pin connection setups, sensor offsets, sensor sensitivities, and sensor limits for each stage. Each sensor can be individually optimized. For example, a button sensor connected to STAGE0 can have different sensitivity and offset values than a button with another function that is connected to a different stage.

CINx INPUT MULTIPLEXER SETUP

Table 34 and Table 35 list the available options for the CINx_CONNECTION_SETUP bits when the sensor input pins are connected to the CDC.

The AD7147 has an on-chip multiplexer that routes the input signals from each CINx pin to the input of the converter. Each input pin can be tied to either the negative or positive input of the CDC, or it can be left floating. Each input can also be internally connected to the BIAS signal to help prevent cross coupling. If an input is not used, always connect it to the BIAS.

Connecting a CINx input pin to the positive CDC input results in an increase in CDC output code when the corresponding sensor is activated. Connecting a CINx input pin to the negative CDC input results in a decrease in CDC output code when the corresponding sensor is activated.

The AD7147 performs a sequence of 12 conversions. The multiplexer can have different settings for each of the 12 conversions. For example, CIN0 is connected to the negative CDC input for conversion STAGE1, left floating for conversion STAGE1, and so on, for all 12 conversion stages.

For each CINx input for each conversion stage, two bits control how the input is connected to the converter, as shown in Figure 29.

Examples

To connect CIN3 to the positive CDC input on Stage 0 use the following setting:

STAGE0_CONNECTION[6:0] = 0xFFBF
STAGE0_CONNECTION[12:7] = 0x2FFF

To connect CIN0 to the positive CDC input and CIN12 to the negative CIN input on Stage 5 use the following settings:

STAGE5_CONNECTION[6:0] = 0xFFFE
STAGE5_CONNECTION[12:7] = 0x37FF

SINGLE-ENDED CONNECTIONS TO THE CDC

A single-ended connection to the CDC is defined as one CINx input connected to either the positive or negative CDC input for one conversion stage. A differential connection to the CDC is defined as one CINx input connected to the positive CDC input and a second CINx input connected to the negative input of the CDC for one conversion stage.

For any stage, if a single-ended connection to the CDC is made in that stage, the SE_CONNECTION_SETUP bits (Bits[13:12] in the STAGEx_CONNECTION[12:7] register) should be applied as follows:

- SE_CONNECTION_SETUP = 00: do not use.
- SE_CONNECTION_SETUP = 01: single-ended connection. For this stage, there is one CINx connected to the positive CDC input.
- SE_CONNECTION_SETUP = 10: single-ended connection. For this stage, there is one CINx connected to the negative CDC input.
- SE_CONNECTION_SETUP = 11: differential connection. For this stage, there is one CINx connected to the nega tive CDC input and one CINx connected to the positive CDC input.

These bits ensure that during a single-ended connection to the CDC, the input paths to both CDC terminals are matched, which in turn improves the power-supply rejection of the converter measurement.

These bits should be applied in addition to setting the other bits in the STAGEx_CONNECTION registers, as outlined in the CINx Input Multiplexer Setup section.

If more than one CINx input is connected to either the positive or negative input of the converter for the same conversion, set SE_CONNECTION_SETUP to 11. For example, if CIN0 and CIN3 are connected to the positive input of the CDC, set SE_CONNECTION_SETUP to 11.

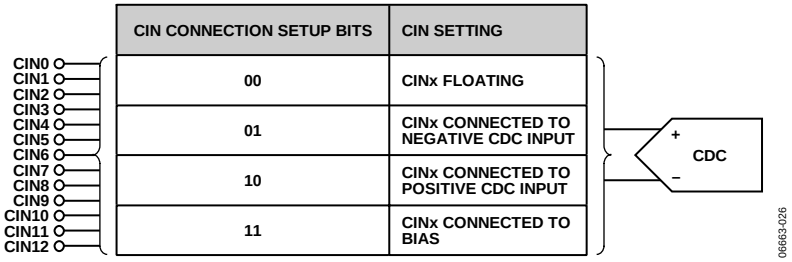

Figure 29. Input Mux Configuration Options

NONCONTACT PROXIMITY DETECTION

The AD7147 internal signal processing continuously monitors all capacitance sensors for noncontact proximity detection. This feature provides the ability to detect when a user is approaching a sensor, at which time all internal calibration is immediately disabled while the AD7147 is automatically configured to detect a valid contact.

The proximity control register bits are described in Table 12. The FP_PROXIMITY_CNT and LP_PROXIMITY_CNT register bits control the length of the calibration disable period after the user stops touching the sensor and is not in close proximity to the sensor during full or low power mode. The calibration is disabled during this period and then enabled again. Figure 30 and Figure 31 show examples of how these registers are used to set the calibration disable periods for the full and low power modes.

The calibration disable period in full power mode is the value of the FP_PROXIMITY_CNT multiplied by 16 multiplied by the time for one conversion sequence in full power mode. The calibration disable period in low power mode is the value of the LP_PROXIMITY_CNT multiplied by 4 multiplied by the time for one conversion sequence in low power mode.

RECALIBRATION

In certain situations (for example, when a user hovers over a sensor for a long time), the proximity flag can be set for a long period. The environmental calibration on the AD7147 is suspended while proximity is detected, but changes may occur to the ambient capacitance level during the proximity event. This means that the ambient value stored on the AD7147 no longer represents the actual ambient value. In this case, even when the user is not in close proximity to the sensor, the proximity flag may still be set. This situation can occur if the user interaction creates some moisture on the sensor, causing the new sensor ambient value to be different from the expected value. In this situation, the AD7147 automatically forces a recalibration internally. This ensures that the ambient values are recalibrated, regardless of how long the user hovers over the sensor. A recalibration ensures maximum AD7147 sensor performance.

The AD7147 recalibrates automatically when the measured CDC value exceeds the stored ambient value by an amount determined by the PROXIMITY_RECAL_LVL bits for a set period of time known as the recalibration timeout. In full power mode, the recalibration timeout is controlled by FP_PROXIMITY_RECAL; in low power mode, by LP_PROXMTY_RECAL.

The recalibration timeout in full power mode is the value of the FP_PROXIMITY_RECAL multiplied by the time for one conversion sequence in full power mode. The recalibration timeout in low power mode is the value of the LP_PROXIMITY_RECAL multiplied by the time for one conversion sequence in low power mode.

Figure 32 and Figure 33 show examples of how the FP_PROXIMITY_RECAL and LP_PROXIMITY_RECAL register bits control the timeout period before a recalibration while operating in the full and low power modes. In these examples, a user approaches a sensor and then leaves, but the proximity detection remains active. The measured CDC value exceeds the stored ambient value by the amount set in the PROXIMITY_RECAL_LVL bits for the entire timeout period. The sensor is automatically recalibrated at the end of the timeout period.

PROXIMITY SENSITIVITY

The fast filter in Figure 34 is used to detect when someone is close to the sensor (proximity). Two conditions, detected by Comparator 1 and Comparator 2, set the internal proximity detection signal: Comparator 1 detects when a user is approaching or leaving a sensor, and Comparator 2 detects when a user hovers over a sensor or approaches a sensor very slowly.

The sensitivity of Comparator 1 is controlled by the PROXIMITY_DETECTION_RATE bits. For example, if PROXIMITY_DETECTION_RATE is set to 4, the Proximity 1 signal is set when the absolute difference between WORD1 and WORD3 exceeds (4 × 16) LSB codes.

The PROXIMITY_RECAL_LVL bits (Address 0x003) control the sensitivity of Comparator 2. For example, if PROXIMITY_RECAL_LVL is set to 75, the Proximity 2 signal is set when the absolute difference between the fast filter average value and the ambient value exceeds (75 × 16) LSB codes.

Table 12. Proximity Control Registers (See Figure 34)

Bit Name	Length (Bits)	Register Address	Description
FP_PROXIMITY_CNT	4	0x002[7:4]	Calibration disable time in full power mode.
LP_PROXIMITY_CNT	4	0x002[11:8]	Calibration disable time in low power mode.
FP_PROXIMITY_RECAL	8	0x004[9:0]	Full power mode proximity recalibration time.
LP_PROXIMITY_RECAL	6	0x004[15:10]	Low power mode proximity recalibration time.
PROXIMITY_RECAL_LVL	8	0x003[7:0]	Proximity recalibration level. This value multiplied by 16 controls the sensitivity of Comparator 2 (see Figure 34).
PROXIMITY_DETECTION_RATE	6	0x003[13:8]	Proximity detection rate. This value multiplied by 16 controls the sensitivity of Comparator 1 (see Figure 34).

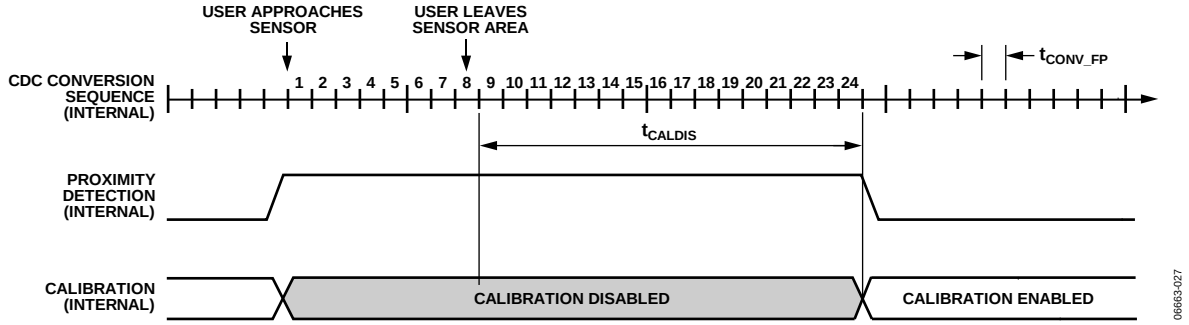

Figure 30. Example of Full Power Mode Proximity Detection (FP_PROXIMITY_CNT = 1)

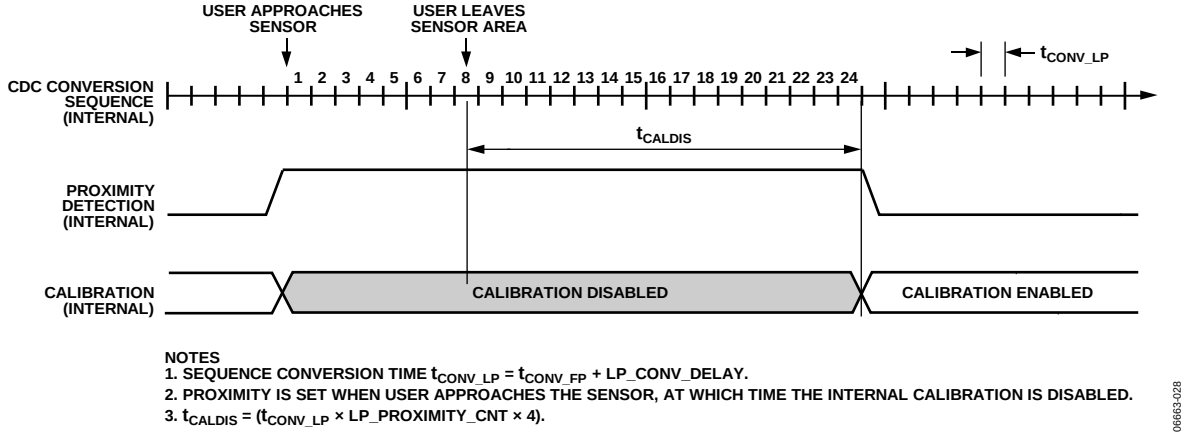

Figure 31. Example of Low Power Mode Proximity Detection (LP_PROXIMITY_CNT = 4)

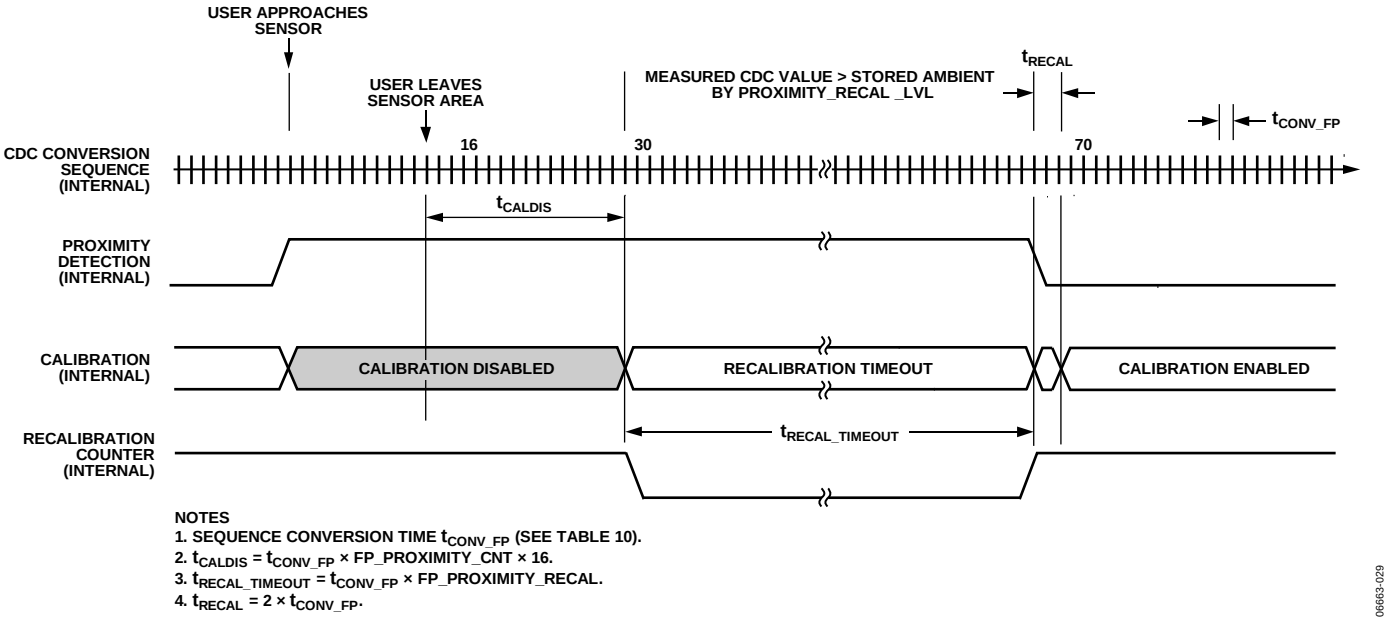

Figure 32. Example of Full Power Mode Proximity Detection with Forced Recalibration (FP_PROXIMITY_CNT = 1 and FP_PROXIMITY_RECAL = 40)

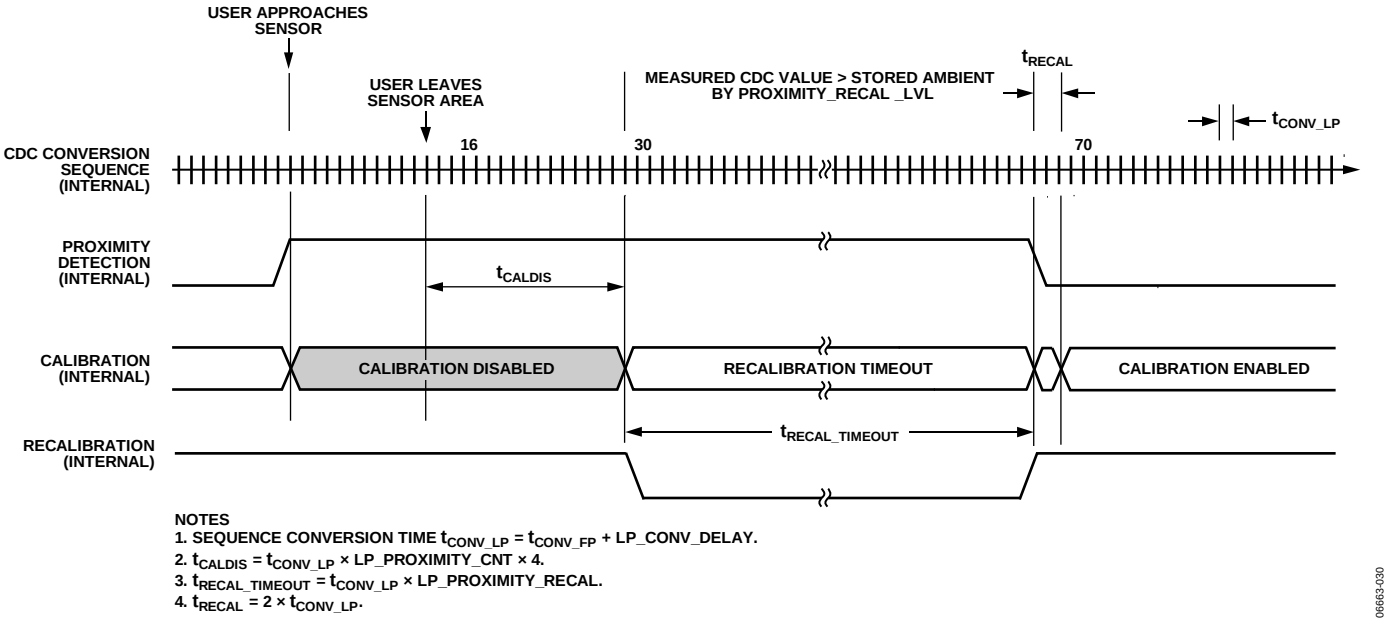

Figure 33. Example of Low Power Mode Proximity Detection with Forced Recalibration (LP_PROXIMITY_CNT = 4 and LP_PROXIMITY_RECAL = 40)

FF_SKIP_CNT

The proximity detection fast FIFO is used by the on-chip logic to determine if proximity is detected. The fast FIFO expects to receive samples from the converter at a set rate. FF_SKIP_CNT is used to normalize the frequency of the samples going into the FIFO, regardless of how many conversion stages are in a sequence. In Register 0x002, Bits[3:0] are the fast filter skip control, FF_SKIP_CNT. This value determines which CDC samples are not used (skipped) by the proximity detection fast FIFO.

Determining the FF_SKIP_CNT value is required only once during the initial setup of the capacitance sensor interface. Table 13 shows how FF_SKIP_CNT controls the update rate of the fast FIFO. The recommended value for the setting when using all 12 conversion stages on the AD7147 is 0000, or no samples skipped.

Table 13. FF_SKIP_CNT Settings

FF_SKIP_CNT	FAST FIFO Update Rate		
	Decimation = 64	Decimation = 128	Decimation = 256
0	0.768 × (SEQUENCE_STAGE_NUM + 1) ms	1.536 × (SEQUENCE_STAGE_NUM + 1) ms	3.072 × (SEQUENCE_STAGE_NUM + 1) ms
1	1.536 × (SEQUENCE_STAGE_NUM + 1) ms	3.072 × (SEQUENCE_STAGE_NUM + 1) ms	6.144 × (SEQUENCE_STAGE_NUM + 1) ms
2	2.3 × (SEQUENCE_STAGE_NUM + 1) ms	4.608 × (SEQUENCE_STAGE_NUM + 1) ms	9.216 × (SEQUENCE_STAGE_NUM + 1) ms
3	3.072 × (SEQUENCE_STAGE_NUM + 1) ms	6.144 × (SEQUENCE_STAGE_NUM + 1) ms	12.288 × (SEQUENCE_STAGE_NUM + 1) ms
4	3.84 × (SEQUENCE_STAGE_NUM + 1) ms	7.68 × (SEQUENCE_STAGE_NUM + 1) ms	15.36 × (SEQUENCE_STAGE_NUM + 1) ms
5	4.6 × (SEQUENCE_STAGE_NUM + 1) ms	9.216 × (SEQUENCE_STAGE_NUM + 1) ms	18.432 × (SEQUENCE_STAGE_NUM + 1) ms
6	5.376 × (SEQUENCE_STAGE_NUM + 1) ms	10.752 × (SEQUENCE_STAGE_NUM + 1) ms	21.504 × (SEQUENCE_STAGE_NUM + 1) ms
7	6.144 × (SEQUENCE_STAGE_NUM + 1) ms	12.288 × (SEQUENCE_STAGE_NUM + 1) ms	24.576 × (SEQUENCE_STAGE_NUM + 1) ms
8	6.912 × (SEQUENCE_STAGE_NUM + 1) ms	13.824 × (SEQUENCE_STAGE_NUM + 1) ms	27.648 × (SEQUENCE_STAGE_NUM + 1) ms
9	7.68 × (SEQUENCE_STAGE_NUM + 1) ms	15.36 × (SEQUENCE_STAGE_NUM + 1) ms	30.72 × (SEQUENCE_STAGE_NUM + 1) ms
10	8.448 × (SEQUENCE_STAGE_NUM + 1) ms	16.896 × (SEQUENCE_STAGE_NUM + 1) ms	33.792 × (SEQUENCE_STAGE_NUM + 1) ms
11	9.216 × (SEQUENCE_STAGE_NUM + 1) ms	18.432 × (SEQUENCE_STAGE_NUM + 1) ms	36.864 × (SEQUENCE_STAGE_NUM + 1) ms
12	9.984 × (SEQUENCE_STAGE_NUM + 1) ms	19.968 × (SEQUENCE_STAGE_NUM + 1) ms	39.936 × (SEQUENCE_STAGE_NUM + 1) ms
13	10.752 × (SEQUENCE_STAGE_NUM + 1) ms	21.504 × (SEQUENCE_STAGE_NUM + 1) ms	43.008 × (SEQUENCE_STAGE_NUM + 1) ms
14	11.52 × (SEQUENCE_STAGE_NUM + 1) ms	23.04 × (SEQUENCE_STAGE_NUM + 1) ms	46.08 × (SEQUENCE_STAGE_NUM + 1) ms
15	12.288 × (SEQUENCE_STAGE_NUM + 1) ms	24.576 × (SEQUENCE_STAGE_NUM + 1) ms	49.152 × (SEQUENCE_STAGE_NUM + 1) ms

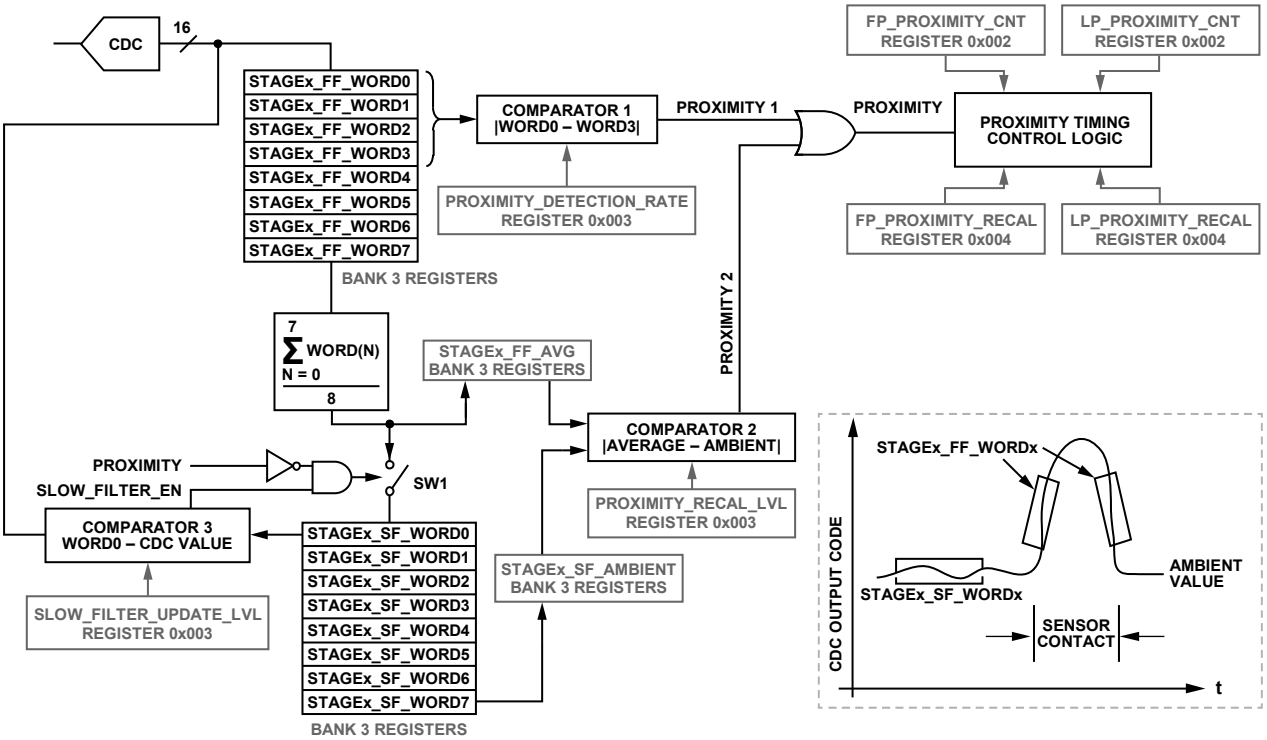

NOTES
1. SLOW_FILTER_EN, WHICH IS THE NAME OF THE OUTPUT OF COMPARATOR 3, IS SET AND SW1 IS CLOSED WHEN |STAGEx_SF_WORD0 – CDC VALUE| EXCEEDS THE VALUE PROGRAMMED IN THE SLOW_FILTER_UPDATE_LVL REGISTER PROVIDING PROXIMITY IS NOT SET.
2. PROXIMITY 1 IS SET WHEN |STAGEx_FF_WORD0 – STAGEx_FF_WORD3| EXCEEDS THE VALUE PROGRAMMED IN THE PROXIMITY_DETECTION_RATE REGISTER.
3. PROXIMITY 2 IS SET WHEN |AVERAGE – AMBIENT| EXCEEDS THE VALUE PROGRAMMED IN THE PROXIMITY_RECAL_LVL REGISTER.
4. DESCRIPTION OF COMPARATOR FUNCTIONS:
   COMPARATOR 1: USED TO DETECT WHEN A USER IS APPROACHING OR LEAVING A SENSOR.
   COMPARATOR 2: USED TO DETECT WHEN A USER IS HOVERING OVER A SENSOR OR APPROACHING A SENSOR VERY SLOWLY. ALSO USED TO DETECT IF THE SENSOR AMBIENT LEVEL HAS CHANGED AS A RESULT OF THE USER INTERACTION. FOR EXAMPLE, HUMIDITY OR DIRT LEFT BEHIND ON SENSOR.
   COMPARATOR 3: USED TO ENABLE THE SLOW FILTER UPDATE RATE. THE SLOW FILTER IS UPDATED WHEN SLOW_FILTER_EN IS SET AND PROXIMITY IS NOT SET.

Figure 34. AD7147 Proximity-Detection Logic

ENVIRONMENTAL CALIBRATION

The AD7147 provides on-chip capacitance sensor calibration to automatically adjust for environmental conditions that have an effect on the ambient levels of the capacitance sensor. The output levels of the capacitance sensor are sensitive to temperature, humidity, and, in some cases, dirt.

The AD7147 achieves optimal and reliable sensor performance by continuously monitoring the CDC ambient levels and compensating for any environmental changes by adjusting the values of the STAGEx_HIGH_THRESHOLD register and the STAGEx_LOW_THRESHOLD registers as described in the Threshold Equations section. The CDC ambient level is defined as the output level of the capacitance sensor during periods when the user is not approaching or in contact with the sensor.

After the AD7147 is configured, the compensation logic runs automatically with each conversion when the AD7147 is not being touched. This allows the AD7147 to compensate for rapidly changing environmental conditions.

The ambient compensation control registers provide the host with access to general setup and controls for the compensation algorithm. On-chip RAM stores the compensation data for each conversion stage, as well as setup information specific for each stage.

Figure 35 shows an example of the ideal behavior of a capacitance sensor, where the CDC ambient level remains constant regardless of the environmental conditions. The CDC output shown is for a pair of differential button sensors, where one sensor caused an increase and the other caused a decrease in measured capacitance when activated. The positive and negative sensor threshold levels are calculated as a percentage of the STAGEx_OFFSET_HIGH and STAGEx_OFFSET_LOW values and are based on the threshold sensitivity settings and the ambient value. These values are sufficient to detect a sensor contact and result in the AD7147 asserting the $\overline{\text{INT}}$ output when the threshold levels are exceeded.

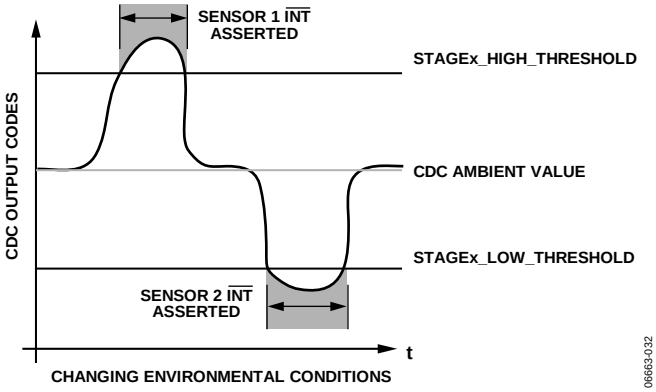

Figure 35. Ideal Sensor Behavior with a Constant Ambient Level

CAPACITANCE SENSOR BEHAVIOR WITHOUT CALIBRATION

Figure 36 shows the typical behavior of a capacitance sensor when calibration is not applied. This figure shows ambient levels drifting over time as environmental conditions change. As a result of the initial threshold levels remaining constant while the ambient levels drift upward, Sensor 2 fails to detect a user contact in this example.

The Capacitance Sensor Behavior with Calibration section describes how the AD7147 adaptive calibration algorithm prevents such errors from occurring.

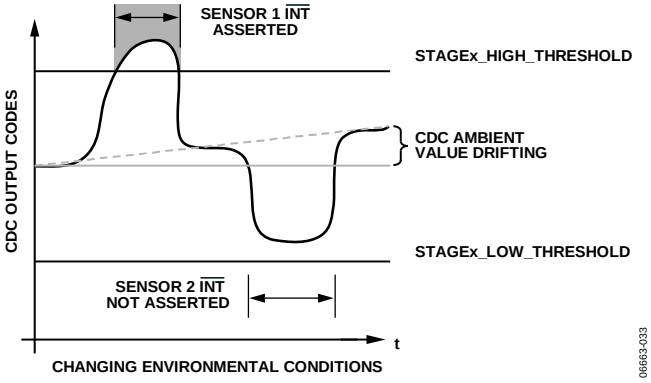

Figure 36. Typical Sensor Behavior Without Calibration

THRESHOLD EQUATIONS

On-Chip Logic Stage High Threshold

$$STAGEx_HIGH_THRESHOLD = STAGEx_SF_AMBIENT + \left(\frac{STAGEx_OFFSET_HIGH}{4}\right) + \left(\frac{\left(STAGEx_OFFSET_HIGH - \frac{STAGEx_OFFSET_HIGH}{4}\right)}{16}\right) \times POS_THRESHOLD_SENSITIVITY \quad (1)$$

On-Chip Logic Stage Low Threshold

$$STAGEx_LOW_THRESHOLD = STAGEx_SF_AMBIENT + \left(\frac{STAGEx_OFFSET_LOW}{4}\right) + \left(\frac{\left(STAGEx_OFFSET_LOW - \frac{STAGEx_OFFSET_LOW}{4}\right)}{16}\right) \times NEG_THRESHOLD_SENSITIVITY \quad (2)$$

CAPACITANCE SENSOR BEHAVIOR WITH CALIBRATION

The AD7147 on-chip adaptive calibration algorithm prevents sensor detection errors such as the one shown in Figure 36. This is achieved by monitoring the CDC ambient levels and readjusting the initial STAGEx_OFFSET_HIGH and STAGEx_OFFSET_LOW values according to the amount of ambient drift measured on each sensor. Based on the new stage offset values, the internal STAGEx_HIGH_THRESHOLD and STAGEx_LOW_THRESHOLD values described in Equation 1 and Equation 2 are automatically updated.

This closed-loop routine ensures the reliability and repeatable operation of every sensor connected to the AD7147 when they are subjected to dynamic environmental conditions. Figure 37 shows a simplified example of how the AD7147 applies the adaptive calibration process, resulting in no interrupt errors even with changing CDC ambient levels due to dynamic environmental conditions.

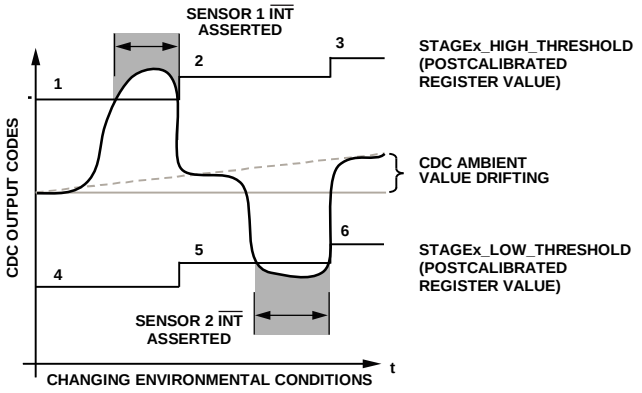

[1]INITIAL STAGEx_OFFSET_HIGH REGISTER VALUE.
[2]POSTCALIBRATED REGISTER STAGEx_HIGH_THRESHOLD.
[3]POSTCALIBRATED REGISTER STAGEx_HIGH_THRESHOLD.
[4]INITIAL STAGEx_LOW_THRESHOLD.
[5]POSTCALIBRATED REGISTER STAGEx_LOW_THRESHOLD.
[6]POSTCALIBRATED REGISTER STAGEx_LOW_THRESHOLD.

06663-034

Figure 37. Typical Sensor Behavior with Calibration Applied on the Data Path

SLOW FIFO

As shown in Figure 34, there are a number of FIFOs implemented on the AD7147. These FIFOs are located in Bank 3 of the on-chip memory. The slow FIFOs are used by the on-chip logic to monitor the ambient capacitance level from each sensor.

AVG_FP_SKIP and AVG_LP_SKIP

In Register 0x001, Bits[13:12] are the slow FIFO skip control for full power mode, AVG_FP_SKIP. Bits[15:14] in the same register are the slow FIFO skip control for low power mode, AVG_LP_SKIP, and determine which CDC samples are not used (skipped) in the slow FIFO. Changing the values of the AVG_FP_SKIP and AVG_LP_SKIP bits slows down or speeds up the rate at which the ambient capacitance value tracks the measured capacitance value read by the converter:

- Slow FIFO update rate in full power mode = AVG_FP_SKIP × [(3 × Decimation Rate) × (SEQUENCE_STAGE_NUM + 1) × (FF_SKIP_CNT + 1) × 4 × 10^{-7}].
- Slow FIFO update rate in low power mode = (AVG_LP_SKIP + 1) × [(3 × Decimation Rate) × (SEQUENCE_STAGE_NUM + 1) × (FF_SKIP_CNT + 1) × 4 x 10^{-7}]/[(FF_SKIP_CNT + 1) + LP_CONV_DELAY].

The slow FIFO is used by the on-chip logic to track the ambient capacitance value. The slow FIFO expects to receive samples from the converter at a rate between 33 ms and 40 ms. AVG_FP_SKIP and AVG_LP_SKIP are used to normalize the frequency of the samples going into the FIFO, regardless of how many conversion stages are in a sequence.

Determining the AVG_FP_SKIP and AVG_LP_SKIP values is required only once during the initial setup of the capacitance sensor interface. The recommended values for these settings when using all 12 conversion stages on the AD7147 are as follows:

- AVG_FP_SKIP = 00 = skip three samples
- AVG_LP_SKIP = 00 = skip zero samples

SLOW_FILTER_UPDATE_LVL

The SLOW_FILTER_UPDATE_LVL controls whether the most recent CDC measurement goes into the slow FIFO (slow filter). The slow filter is updated when the difference between the current CDC value and the last value of the slow FIFO is greater than the value of SLOW_FILTER_UPDATE_LVL. This variable is in Ambient Control Register 1 (AMB_COMP_CTRL1) (Address 0x003).

ADAPTIVE THRESHOLD AND SENSITIVITY

The AD7147 provides an on-chip, self-adjusting adaptive threshold and sensitivity algorithm. This algorithm continuously monitors the output levels of each sensor and automatically rescales the threshold levels in proportion to the sensor area covered by the user. As a result, the AD7147 maintains optimal threshold and sensitivity levels for all users regardless of their finger sizes.

The threshold level is always referenced from the ambient level and is defined as the CDC converter output level that must be exceeded before a valid sensor contact can occur. The sensitivity level is defined as how sensitive the sensor must be before a valid contact can be registered.

Figure 38 provides an example of how the adaptive threshold and sensitivity algorithm works. The positive and negative sensor threshold levels are calculated as a percentage of the STAGEx_OFFSET_HIGH and STAGEx_OFFSET_LOW values and are based on the threshold sensitivity settings and the ambient value. After the AD7147 is configured, initial estimates are supplied for both STAGEx_OFFSET_HIGH and STAGEx_OFFSET_LOW, and then the calibration engine automatically adjusts the STAGEx_HIGH_THRESHOLD and STAGEx_LOW_THRESHOLD values for sensor response.

The AD7147 tracks the average maximum and minimum values measured from each sensor. These values provide an indication of how the user is interacting with the sensor. A large finger results in a large average maximum or minimum value, whereas a small finger results in smaller values. When the average maximum or minimum value changes, the threshold levels are rescaled to ensure that the threshold levels are appropriate for the current user. Figure 39 shows how the minimum and maximum sensor responses are tracked by the on-chip logic.

Reference A in Figure 38 shows a less sensitive threshold level for a user with small fingers and demonstrates the disadvantages of a fixed threshold level.

By enabling the adaptive threshold and sensitivity algorithm, the positive and negative threshold levels are determined by the POS_THRESHOLD_SENSITIVITY and NEG_THRESHOLD_SENSITIVITY bit values and by the most recent average maximum sensor output value. These bits can be used to select 16 different positive and negative sensitivity levels ranging between 25% and 95.32% of the most recent average maximum output level referenced from the ambient value. The smaller the sensitivity percentage setting, the easier it is to trigger a sensor activation. Reference B shows that the positive adaptive threshold level is set at almost mid-sensitivity with a 62.51% threshold level by setting POS_THRESHOLD_ SENSITIVITY = 1000. Figure 38 also provides a similar example for the negative threshold level, with NEG_THRESHOLD_SENSITIVITY = 0011.

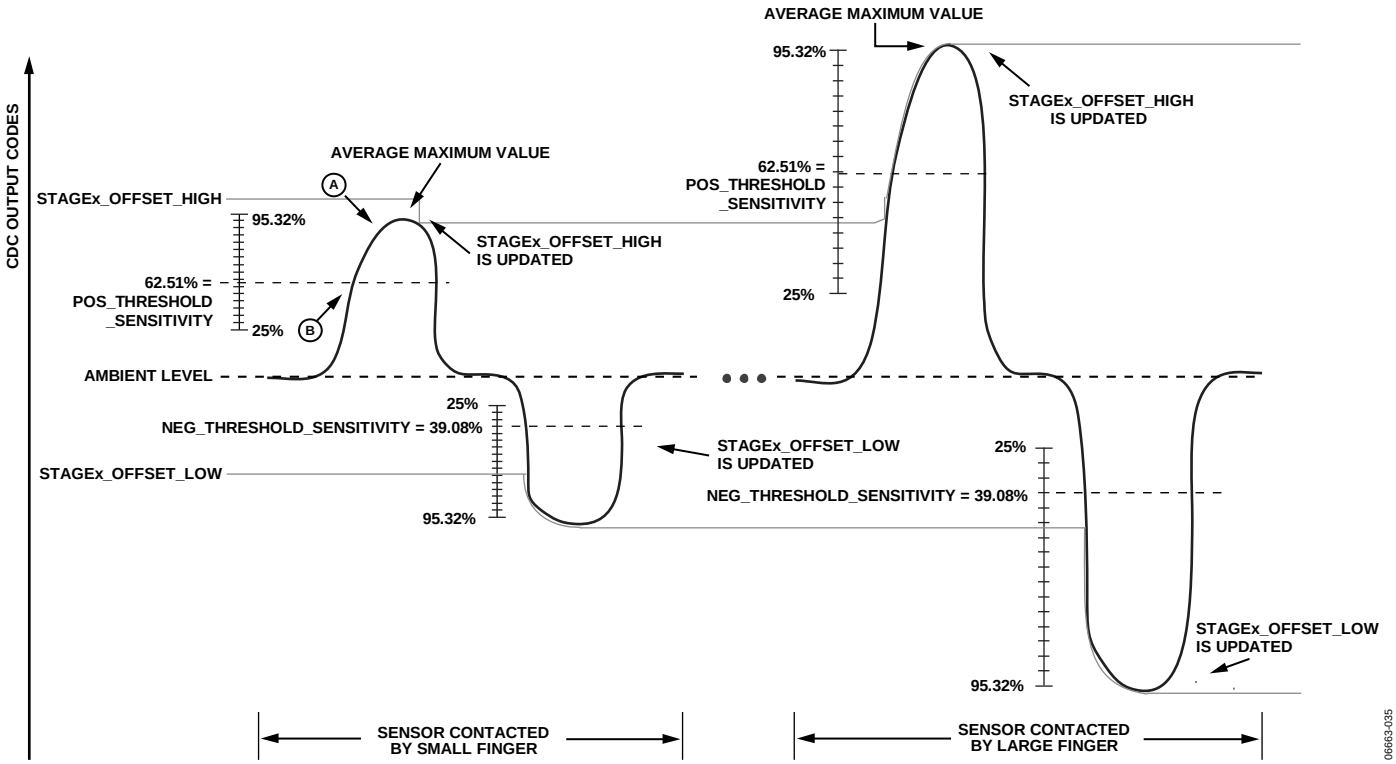

Figure 38. Example of Threshold Sensitivity (POS_THRESHOLD_SENSITIVITY = 1000, NEG_THRESHOLD_SENSITIVITY = 0011)

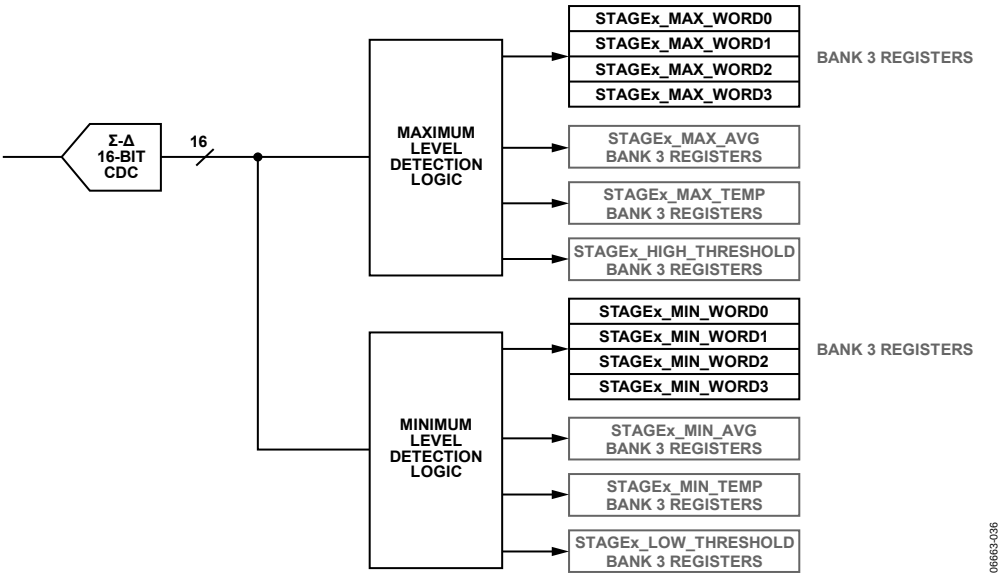

Figure 39. Tracking the Minimum and Maximum Average Sensor Values

Table 14. Additional Information About Environmental Calibration and Adaptive Threshold Registers

Register/Bit	Register Location	Description
NEG_THRESHOLD_SENSITIVITY	Bank 2	Used in Equation 2. This value is programmed once at startup.
NEG_PEAK_DETECT	Bank 2	Used by internal adaptive threshold logic only. The NEG_PEAK_DETECT is set to a percentage of the difference between the ambient CDC value and the minimum average CDC value. If the output of the CDC approaches the NEG_PEAK_DETECT percentage of the minimum average, the minimum average value is updated.
POS_THRESHOLD_SENSITIVITY	Bank 2	Used in Equation 1. This value is programmed once at startup.
POS_PEAK_DETECT	Bank 2	Used by internal adaptive threshold logic only. The POS_PEAK_DETECT is set to a percentage of the difference between the ambient CDC value and the maximum average CDC value. If the output of the CDC approaches the POS_PEAK_DETECT percentage of the maximum average, the maximum average value is updated.
STAGEx_OFFSET_LOW	Bank 2	Used in Equation 2. An initial value (based on sensor characterization) is programmed into this register at startup. The AD7147 on-chip calibration algorithm automatically updates this register based on the amount of sensor drift due to changing ambient conditions. Set this register to 80% of the STAGEx_OFFSET_LOW_CLAMP value.
STAGEx_OFFSET_HIGH	Bank 2	Used in Equation 1. An initial value (based on sensor characterization) is programmed into this register at startup. The AD7147 on-chip calibration algorithm automatically updates this register based on the amount of sensor drift due to changing ambient conditions. Set this register to 80% of the STAGEx_OFFSET_HIGH_CLAMP value.
STAGEx_OFFSET_HIGH_CLAMP	Bank 2	Used by internal environmental calibration and adaptive threshold algorithms only. An initial value (based on sensor characterization) is programmed into this register at startup. The value in this register prevents a user from causing the output value of a sensor to exceed the expected nominal value. Set this register to the maximum expected sensor response or the maximum change in CDC output code.
STAGEx_OFFSET_LOW_CLAMP	Bank 2	Used by internal environmental calibration and adaptive threshold algorithms only. An initial value (based on sensor characterization) is programmed into this register at startup. The value in this register prevents a user from causing the output value of a sensor to exceed the expected nominal value. Set this register to the minimum expected sensor response or the minimum change in CDC output code.
STAGEx_SF_AMBIENT	Bank 3	Used in Equation 1 and Equation 2. This is the ambient sensor output when the sensor is not touched, as calculated using the slow FIFO.
STAGEx_HIGH_THRESHOLD	Bank 3	Equation 1 value.
STAGEx_LOW_THRESHOLD	Bank 3	Equation 2 value.

INTERRUPT OUTPUT

The AD7147 has an interrupt output that triggers an interrupt service routine on the host processor. The $\overline{\text{INT}}$ signal is on Pin 17 and is an open-drain output. There are three types of interrupt events on the AD7147: a CDC conversion-complete interrupt, a sensor touch interrupt, and a GPIO interrupt. Each interrupt has enable and status registers. The conversion-complete and sensor-touch (sensor-activation) interrupts can be enabled on a per-conversion-stage basis. The status registers indicate what type of interrupt triggered the $\overline{\text{INT}}$ pin. Status registers are cleared, and the $\overline{\text{INT}}$ signal is reset high during a read operation. The signal returns high as soon as the read address has been set up.

CDC CONVERSION-COMPLETE INTERRUPT

The AD7147 interrupt signal asserts low to indicate the completion of a conversion stage and that new conversion result data is available in the registers.

The interrupt can be independently enabled for each conversion stage. Each conversion-stage-complete interrupt can be enabled via the STAGEx_COMPLETE_INT_ENABLE register (Address 0x007). This register has a bit that corresponds to each conversion stage. Setting this bit to 1 enables the interrupt for that stage. Clearing this bit to 0 disables the conversion-complete interrupt for that stage.

The AD7147 interrupt should be enabled only for the last stage in a conversion sequence. For example, if there are five conversion stages, only the conversion-complete interrupt for STAGE4 is enabled. Therefore, $\overline{\text{INT}}$ only asserts when all five conversion stages are complete and the host can read new data from all five result registers. The interrupt is cleared by reading the STAGEx_COMPLETE_INT_STATUS register located at Address 0x00A.

Register 0x00A is the conversion-complete interrupt status register. Each bit in this register corresponds to a conversion stage. If a bit is set, it means that the conversion-complete interrupt for the corresponding stage was triggered. This register is cleared upon a read if the underlying condition that triggered the interrupt is not present.

SENSOR-TOUCH INTERRUPT

The sensor-touch interrupt mode is implemented when the host processor requires an interrupt only when a sensor is contacted.

Configuring the AD7147 into this mode results in the interrupt being asserted when the user makes contact with the sensor and again when the user stops touching the sensor. The second interrupt is required to alert the host processor that the user is no longer contacting the sensor.

The registers located at Address 0x005 and Address 0x006 are used to enable the interrupt output for each stage. The registers located at Address 0x008 and Address 0x009 are used to read back the interrupt status for each stage.

Figure 40 shows the interrupt output timing during contact with one of the sensors connected to STAGE0 while operating in the sensor-touch interrupt mode. For a low limit configuration, the interrupt output is asserted as soon as the sensor is contacted and again after the user has stopped contacting the sensor. (Note that the interrupt output remains low until the host processor reads back the interrupt status registers located at Address 0x008 and Address 0x009.)

The interrupt output is asserted when there is a change in the interrupt status bits. This can indicate that a user is touching the sensor(s) for the first time, the number of sensors being touched has changed, or the user is no longer touching the sensor(s). Reading the status bits in the interrupt status register shows the current sensor activations.

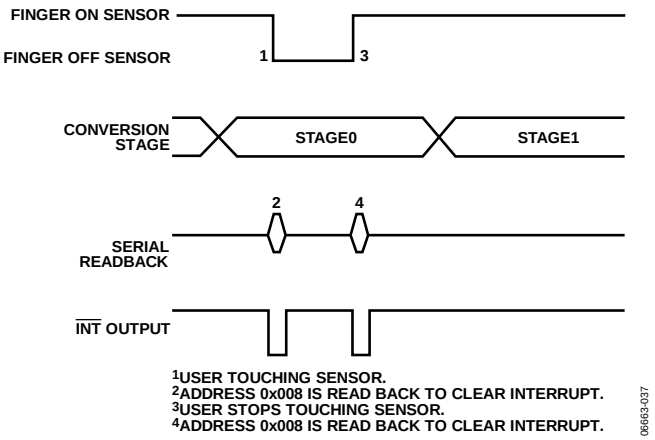

Figure 40. Example of Sensor-Touch Interrupt

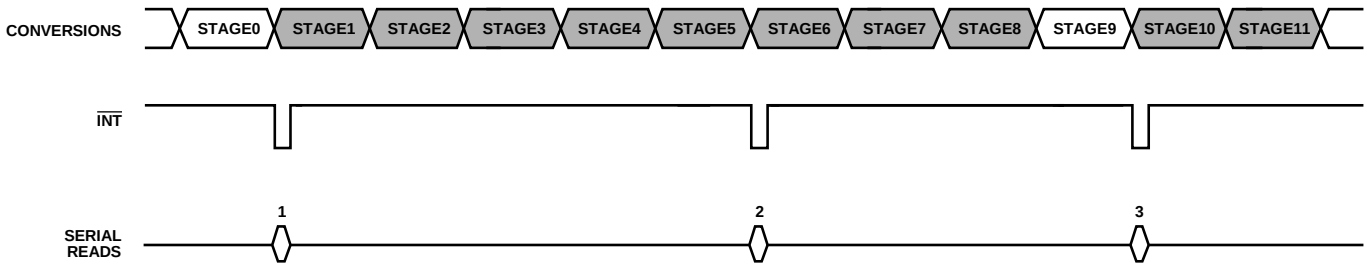

NOTES
THIS IS AN EXAMPLE OF A CDC CONVERSION-COMPLETE INTERRUPT.

THIS TIMING EXAMPLE SHOWS THAT THE INTERRUPT OUTPUT HAS BEEN ENABLED TO BE ASSERTED AT THE END OF A CONVERSION CYCLE FOR STAGE0, STAGE5, AND STAGE9. THE INTERRUPTS FOR ALL OTHER STAGES HAVE BEEN DISABLED.

STAGEx CONFIGURATION PROGRAMMING NOTES FOR STAGE0, STAGE5, AND STAGE9 (x = 0, 5, 9):
STAGEx_LOW_INT_ENABLE (ADDRESS 0x005) = 0
STAGEx_HIGH_INT_ENABLE (ADDRESS 0x006) = 0
STAGEx_COMPLETE_INT_ENABLE (ADDRESS 0x007) = 1

STAGEx CONFIGURATION PROGRAMMING NOTES FOR STAGE1 THROUGH STAGE8, STAGE10, AND STAGE11 (x = 1, 2, 3, 4, 5, 6, 7, 8, 10, 11):
STAGEx_LOW_INT_ENABLE (ADDRESS 0x005) = 0
STAGEx_HIGH_INT_ENABLE (ADDRESS 0x006) = 0
STAGEx_COMPLETE_INT_ENABLE (ADDRESS 0x007) = 0

SERIAL READBACK REQUIREMENTS FOR STAGE0, STAGE5, AND STAGE9 (THIS READBACK OPERATION IS REQUIRED TO CLEAR THE INTERRUPT OUTPUT.):
[1]READ THE STAGE0_COMPLETE_INT_STATUS (ADDRESS 0x00A) BIT
[2]READ THE STAGE5_COMPLETE_INT_STATUS (ADDRESS 0x00A) BIT
[3]READ THE STAGE9_COMPLETE_INT_STATUS (ADDRESS 0x00A) BIT

06663-038

Figure 41. Example of Configuring the Registers for Conversion-Complete Interrupt Setup

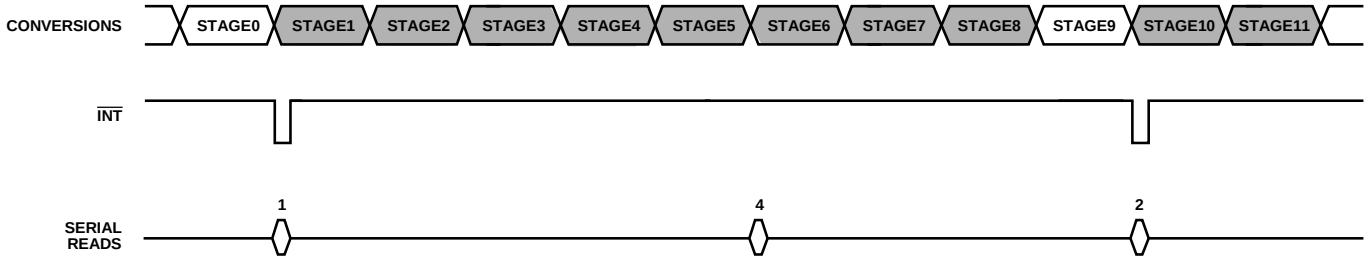

NOTES
THIS IS AN EXAMPLE OF A SENSOR-TOUCH INTERRUPT FOR A CASE WHERE THE LOW THRESHOLD LEVELS WERE EXCEEDED.

FOR EXAMPLE, THE SENSOR CONNECTED TO STAGE0 AND STAGE9 WERE CONTACTED, AND THE LOW THRESHOLD LEVELS WERE EXCEEDED, RESULTING IN THE INTERRUPT BEING ASSERTED. THE STAGE6 INTERRUPT WAS NOT ASSERTED BECAUSE THE USER DID NOT CONTACT THE SENSOR CONNECTED TO STAGE6.

STAGEx CONFIGURATION PROGRAMMING NOTES FOR STAGE0, STAGE6, AND STAGE9 (x = 0, 6, 9):
STAGEx_LOW_INT_ENABLE (ADDRESS 0x005) = 1
STAGEx_HIGH_INT_ENABLE (ADDRESS 0x006) = 0
STAGEx_COMPLETE_INT_ENABLE (ADDRESS 0x007) = 0

STAGEx CONFIGURATION PROGRAMMING NOTES FOR STAGE1 THROUGH STAGE7, STAGE8, STAGE10, AND STAGE11 (x = 1, 2, 3, 4, 5, 6, 7, 8, 10, 11):
STAGEx_LOW_INT_ENABLE (ADDRESS 0x005) = 0
STAGEx_HIGH_INT_ENABLE (ADDRESS 0x006) = 0
STAGEx_COMPLETE_INT_ENABLE (ADDRESS 0x007) = 0

SERIAL READBACK REQUIREMENTS FOR STAGE0 AND STAGE9 (THIS READBACK OPERATION IS REQUIRED TO CLEAR THE INTERRUPT OUTPUT.):
[1]READ THE STAGE0_LOW_INT_STATUS (ADDRESS 0x008) BIT
[2]READ THE STAGE5_LOW_INT_STATUS (ADDRESS 0x008) BIT

06663-039

Figure 42. Example of Configuring the Registers for Sensor-Touch Interrupt Setup

GPIO $\overline{\text{INT}}$ OUTPUT CONTROL

The $\overline{\text{INT}}$ output signal can be controlled by the GPIO pin when the GPIO is configured as an input. The GPIO is con-figured as an input by setting the GPIO_SETUP bits in the interrupt con-figuration register to 01. See the General-Purpose Input/Output (GPIO) section for more information on configuring the GPIO.

Enable the GPIO interrupt by setting the GPIO_INT_ENABLE bit in Register 0x007 to 1, or disable the GPIO interrupt by clearing this bit to 0. The GPIO status bit in the conversion-complete interrupt status register reflects the status of the GPIO interrupt. This bit is set to 1 when the GPIO has triggered $\overline{\text{INT}}$. The bit is cleared upon reading the GPIO_INT_STATUS bit if the condition that caused the interrupt is no longer present.

The GPIO interrupt can be set to trigger on a rising edge, falling edge, high level, or low level at the GPIO input pin. Table 15 shows how the settings of the GPIO_INPUT_CONFIG bits in the inter-rupt enable (STAGE_LOW_INT_ENABLE) register affect the behavior of $\overline{\text{INT}}$.

Figure 43 to Figure 46 show how the interrupt output is cleared upon a read from the GPIO_INT_STATUS bit.

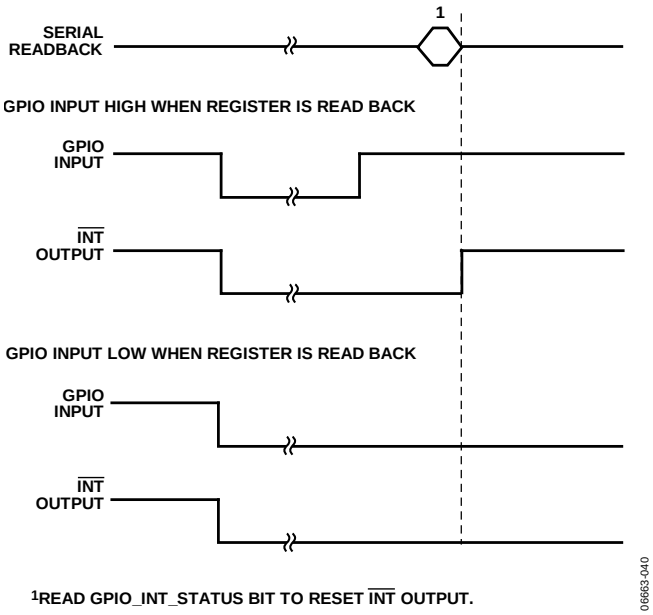

Figure 43. Example of $\overline{\text{INT}}$ Output Controlled by the GPIO Input (GP IO_SETUP = 01, GPIO_INPUT_CONFIG = 00)

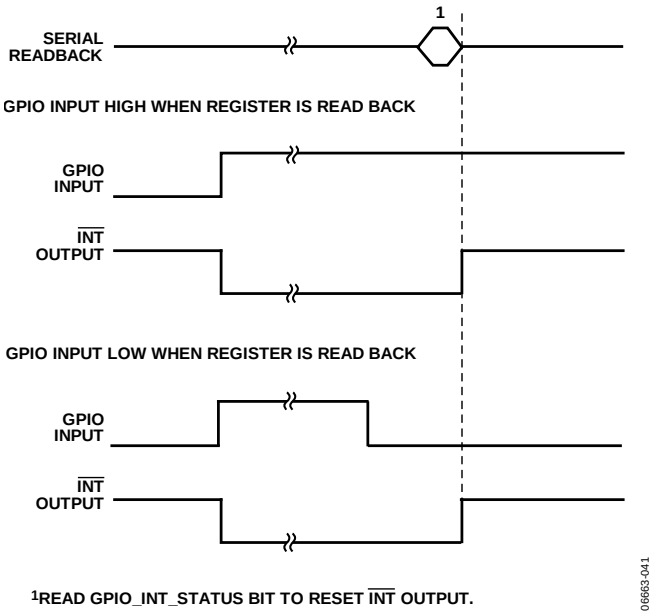

Figure 44. Example of $\overline{\text{INT}}$ Output Controlled by the GPIO Input (GPIO_SETUP = 01, GPIO_INPUT_CONFIG = 01)

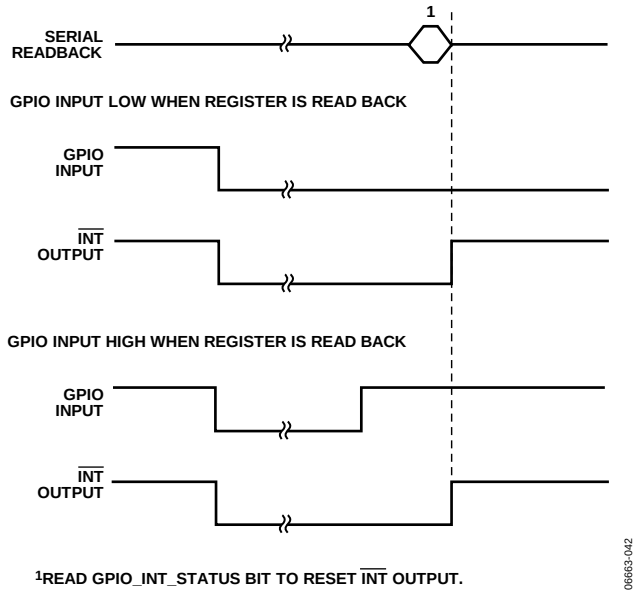

[1]READ GPIO_INT_STATUS BIT TO RESET $\overline{INT}$ OUTPUT.

Figure 45. Example of $\overline{INT}$ Output Controlled by the GPIO Input (GPIO_SETUP = 01, GPIO_INPUT_CONFIG = 10)

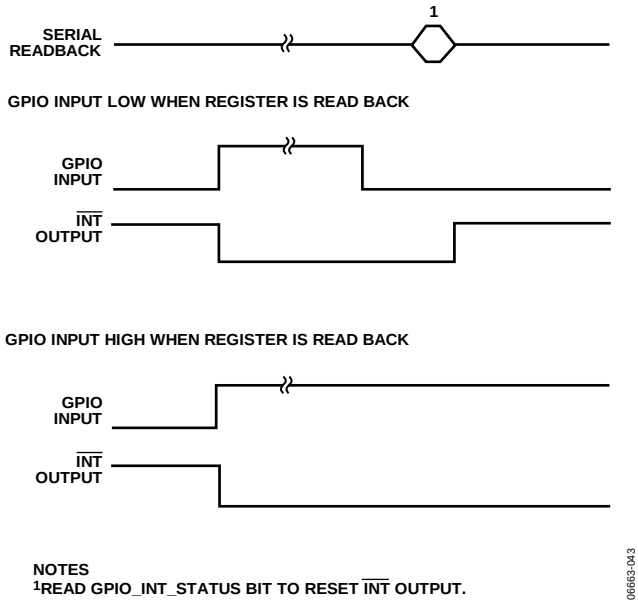

NOTES
[1]READ GPIO_INT_STATUS BIT TO RESET $\overline{INT}$ OUTPUT.

Figure 46. Example of $\overline{INT}$ Output Controlled by the GPIO Input (GPIO_SETUP = 01, GPIO_INPUT_CONFIG = 11)

Table 15. GPIO Interrupt Behavior

GPIO_INPUT_CONFIG	GPIO Pin	GPIO_INT_STATUS	$\overline{INT}$	$\overline{INT}$ Behavior
00 = Negative Level Triggered	1	0	1	Not triggered
00 = Negative Level Triggered	0	1	0	Asserted while signal on GPIO pin is low
01 = Positive Edge Triggered	1	1	0	Pulses low at low-to-high GPIO transition
01 = Positive Edge Triggered	0	0	1	Not triggered
10 = Negative Edge Triggered	1	0	1	Pulses low at high-to-low GPIO transition
10 = Negative Edge Triggered	0	1	0	Not triggered
11 = Positive Level Triggered	1	1	0	Asserted while signal on GPIO pin is high
11 = Positive Level Triggered	0	0	1	Not triggered

OUTPUTS

AC_{SHIELD} OUTPUT

The AD7147 measures capacitance between CINx and ground. Any capacitance to ground on the signal path between the CINx pins and the sensor is included in the AD7147 conversion result.

To eliminate stray capacitance to ground, the AC_{SHIELD} signal should be used to shield the connection between the sensor and CINx, as shown in Figure 47. The plane around the sensors should also be connected to AC_{SHIELD}.

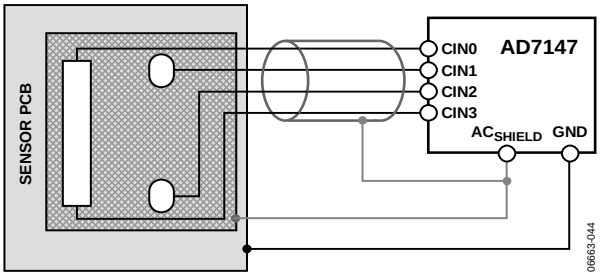

Figure 47. AC_{SHIELD}

The AC_{SHIELD} output is the same signal waveform as the excitation signal on CINx. Therefore, there is no ac current between CINx and AC_{SHIELD}, and any capacitance between these pins does not affect the CINx charge transfer.

Using AC_{SHIELD} eliminates capacitance-to-ground pickup, which means that the AD7147 can be placed up to 10 cm away from the sensors. This allows the AD7147 to be placed on a separate PCB than that of the sensors if the connections between the sensors and the CINx inputs are correctly shielded using AC_{SHIELD}.

GENERAL-PURPOSE INPUT/OUTPUT (GPIO)

The AD7147 has one GPIO pin. It can be configured as an input or an output. The GPIO_SETUP Bits[13:12] in the interrupt enable register determine how the GPIO pin is configured.

Table 16. GPIO_SETUP Bits

GPIO_SETUP	GPIO Configuration
00	GPIO disabled
01	Input
10	Output low
11	Output high

When the GPIO is configured as an output, the voltage level on the pin is set to either a low level or a high level, as defined by the GPIO_SETUP bits (see Table 16).

The GPIO_INPUT_CONFIG bits in the interrupt enable register determine the response of the AD7147 to a signal on the GPIO pin when the GPIO is configured as an input. The GPIO can be configured as either active high or active low, as well as either edge triggered or level triggered (see Table 17).

Table 17. GPIO_INPUT_CONFIG Bits

GPIO_INPUT_CONFIG	GPIO Configuration
00	Triggered on negative level (active low)
01	Triggered on positive edge (active high)
10	Triggered on negative edge (active low)
11	Triggered on positive level (active high)

When GPIO is configured as an input, it triggers the interrupt output on the AD7147. Table 15 lists the interrupt output behavior for each of the GPIO configuration setups.

USING THE GPIO TO TURN ON/OFF AN LED

The GPIO on the AD7147 can be used to turn on and off an LED by setting the GPIO as either output high or low. Setting the GPIO output high turns on the LED; setting the GPIO output low turns off the LED. The GPIO pin connects to a transistor that provides the drive current for the LED. Suitable transistors include the KTC3875 from Korea Electronics Co., Ltd. (KEC).

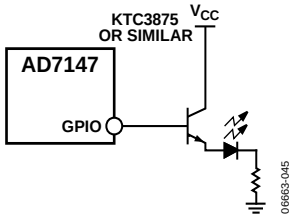

Figure 48. Controlling an LED Using the GPIO

SERIAL INTERFACE

The AD7147 is available with an SPI-compatible interface. The AD7147-1 is available with an I²C-compatible interface. Both parts are the same, with the exception of the serial interface.

SPI INTERFACE

The AD7147 has a 4-wire serial peripheral interface (SPI). The SPI has a data input pin (SDI) for inputting data to the device, a data output pin (SDO) for reading data back from the device, and a data clock pin (SCLK) for clocking data into and out of the device. A chip select pin ($\overline{CS}$) enables or disables the serial interface. $\overline{CS}$ is required for correct operation of the SPI. Data is clocked out of the AD7147 on the negative edge of SCLK and data is clocked into the device on the positive edge of SCLK.

SPI Command Word

All data transactions on the SPI bus begin with the master taking $\overline{CS}$ from high to low and sending out the command word. This indicates to the AD7147 whether the transaction is a read or a write and provides the address of the register from which to begin the data transfer. The following bit map shows the SPI command word.

MSB **LSB**

15	14	13	12	11	10	9:0
1	1	1	0	0	R/$\overline{W}$	Register address

Bits[15:11] of the command word must be set to 11100 to successfully begin a bus transaction.

Bit 10 is the read/write bit; 1 indicates a read, and 0 indicates a write.

Bits[9:0] contain the target register address. When reading or writing to more than one register, this address indicates the address of the first register to be written to or read from.

Writing Data

Data is written to the AD7147 in 16-bit words. The first word written to the device is the command word, with the read/write bit set to 0. The master then supplies the 16-bit input data-word on the SDI line. The AD7147 clocks the data into the register addressed in the command word. If there is more than one word of data to be clocked in, the AD7147 automatically increments the address pointer and clocks the subsequent data-word into the next register.

The AD7147 continues to clock in data on the SDI line until either the master finishes the write transition by pulling $\overline{CS}$ high or the address pointer reaches its maximum value. The AD7147 address pointer does not wrap around. When it reaches its maximum value, any data provided by the master on the SDI line is ignored by the AD7147.

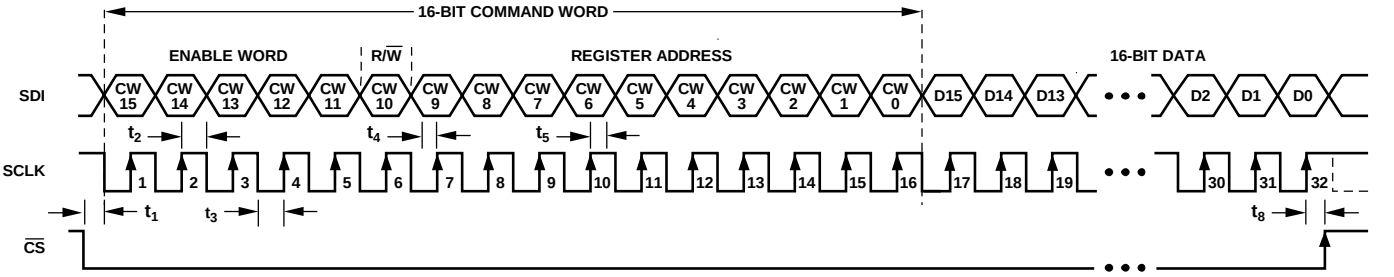

NOTES
1. SDI BITS ARE LATCHED ON SCLK RISING EDGES. SCLK CAN IDLE HIGH OR LOW BETWEEN WRITE OPERATIONS.
2. ALL 32 BITS MUST BE WRITTEN: 16 BITS FOR THE CONTROL WORD AND 16 BITS FOR THE DATA.
3. 16-BIT COMMAND WORD SETTINGS FOR SERIAL WRITE OPERATION:
CW [15:11] = 11100 (ENABLE WORD)
CW [10] = 0 (R/$\overline{W}$)
CW [9:0] = [AD9, AD8, AD7, AD6, AD5, AD4, AD3, AD2, AD1, AD0] (10-BIT MSB-JUSTIFIED REGISTER ADDRESS)

06663-046

Figure 49. Single Register Write SPI Timing

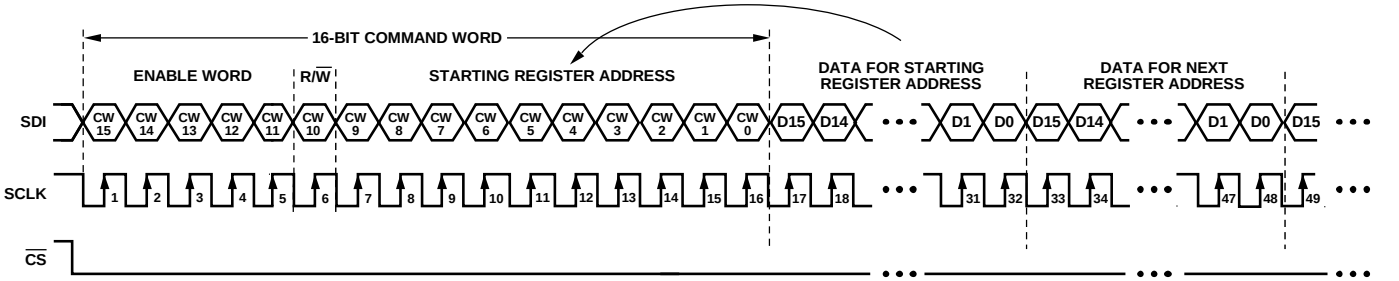

NOTES
1. MULTIPLE SEQUENTIAL REGISTERS CAN BE LOADED CONTINUOUSLY.
2. THE FIRST (LOWEST ADDRESS) REGISTER ADDRESS IS WRITTEN, FOLLOWED BY MULTIPLE 16-BIT DATA-WORDS.
3. THE ADDRESS AUTOMATICALLY INCREMENTS WITH EACH 16-BIT DATA-WORD (ALL 16 BITS MUST BE WRITTEN).
4. CS IS HELD LOW UNTIL THE LAST DESIRED REGISTER HAS BEEN LOADED.
5. 16-BIT COMMAND WORD SETTINGS FOR SEQUENTIAL WRITE OPERATION:
   CW [15:11] = 11100 (ENABLE WORD)
   CW [10] = 0 (R/W)
   CW [9:0] = [AD9, AD8, AD7, AD6, AD5, AD4, AD3, AD2, AD1, AD0] (STARTING MSB-JUSTIFIED REGISTER ADDRESS)

06663-047

Figure 50. Sequential Register Write SPI Timing

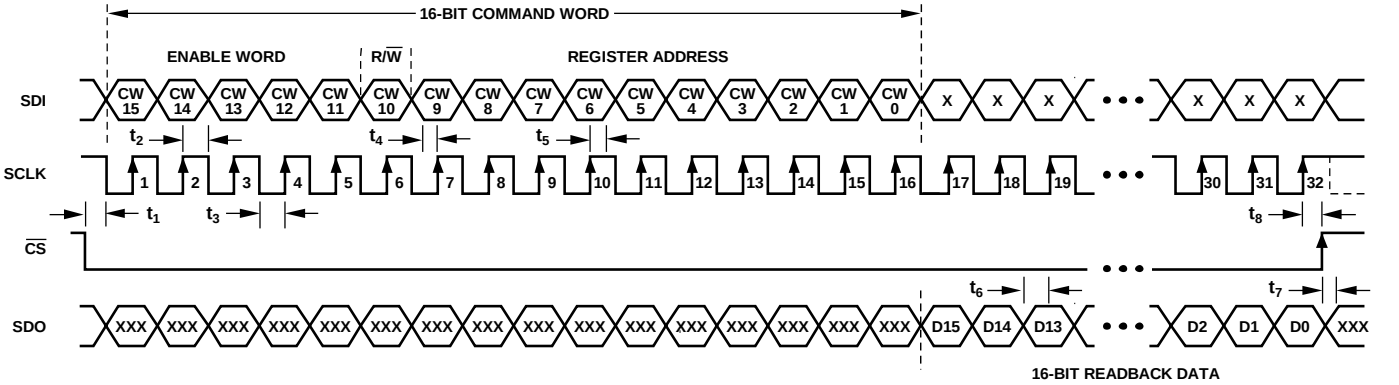

NOTES
1. SDI BITS ARE LATCHED ON SCLK RISING EDGES. SCLK CAN IDLE HIGH OR LOW BETWEEN WRITE OPERATIONS.
2. THE 16-BIT CONTROL WORD MUST BE WRITTEN ON SDI: 5 BITS FOR ENABLE WORD, 1 BIT FOR R/W, AND 10 BITS FOR REGISTER ADDRESS.
3. THE REGISTER DATA IS READ BACK ON THE SDO PIN.
4. X DENOTES DON'T CARE.
5. XXX DENOTES HIGH IMPEDANCE THREE-STATE OUTPUT.
6. CS IS HELD LOW UNTIL ALL REGISTER BITS HAVE BEEN READ BACK.
7. 16-BIT COMMAND WORD SETTINGS FOR SINGLE READBACK OPERATION:
   CW [15:11] = 11100 (ENABLE WORD)
   CW [10] = 1 (R/W)
   CW [9:0] = [AD9, AD8, AD7, AD6, AD5, AD4, AD3, AD2, AD1, AD0] (10-BIT MSB-JUSTIFIED REGISTER ADDRESS)

06663-048

Figure 51. Single Register Readback SPI Timing

Reading Data

A read transaction begins when the master writes the command word to the AD7147 with the read/write bit set to 1. The master then supplies 16 clock pulses per data-word to be read, and the AD7147 clocks out data from the addressed register on the SDO line. The first data-word is clocked out on the first falling edge of SCLK following the command word, as shown in Figure 51.

The AD7147 continues to clock out data on the SDO line if the master continues to supply the clock signal on SCLK. The read transaction finishes when the master takes CS high. If the AD7147 address pointer reaches its maximum value, the AD7147 repeatedly clocks out data from the addressed register. The address pointer does not wrap around.

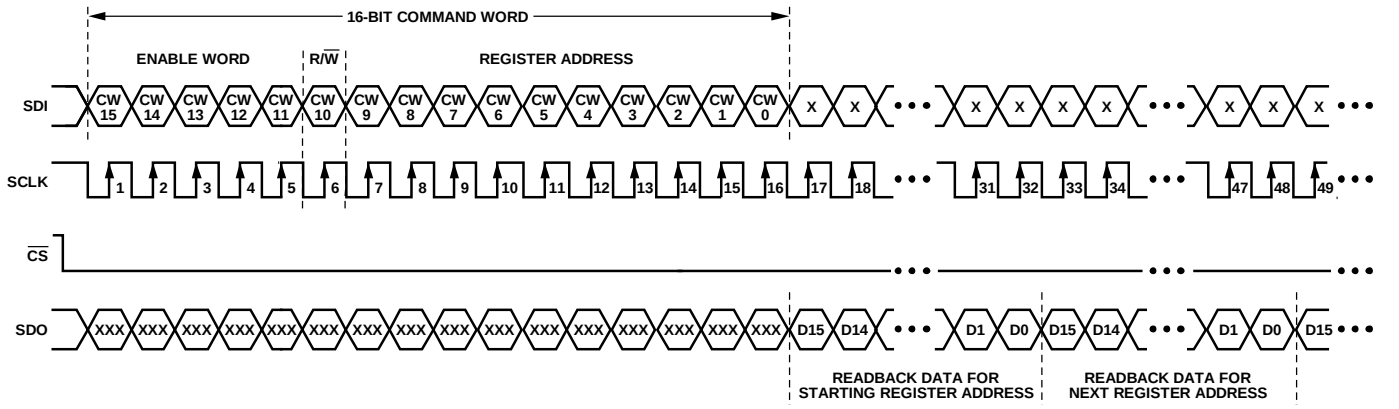

NOTES
1. MULTIPLE REGISTERS CAN BE READ BACK CONTINUOUSLY.
2. THE 16-BIT CONTROL WORD MUST BE WRITTEN ON SDI: 5 BITS FOR ENABLE WORD, 1 BIT FOR R/$\overline{W}$, AND 10 BITS FOR REGISTER ADDRESS.
3. THE ADDRESS AUTOMATICALLY INCREMENTS WITH EACH 16-BIT DATA-WORD BEING READ BACK ON THE SDO PIN.
4. $\overline{CS}$ IS HELD LOW UNTIL ALL REGISTER BITS HAVE BEEN READ BACK.
5. X DENOTES DON'T CARE.
6. XXX DENOTES HIGH IMPEDANCE THREE-STATE OUTPUT.
7. 16-BIT COMMAND WORD SETTINGS FOR SEQUENTIAL READBACK OPERATION:
CW [15:11] = 11100 (ENABLE WORD)
CW [10] = 1 (R/$\overline{W}$)
CW [9:0] = [AD9, AD8, AD7, AD6, AD5, AD4, AD3, AD2, AD1, AD0] (STARTING MSB-JUSTIFIED REGISTER ADDRESS)

06663-049

Figure 52. Sequential Register Readback SPI Timing

I²C-COMPATIBLE INTERFACE

The AD7147-1 supports the industry standard 2-wire I²C serial interface protocol. The two wires associated with the I²C timing are the SCLK and SDA inputs. The SDA is an I/O pin that allows both register write and register readback operations. The AD7147-1 is always a slave device on the I²C serial interface bus.

It has a 7-bit device address, Address 0101 1XX. The lower two bits are set by tying the ADD0 and ADD1 pins high or low. The AD7147-1 responds when the master device sends its device address over the bus. The AD7147-1 cannot initiate data transfers on the bus.

Table 18. AD7147-1 I²C Device Address

ADD1	ADD0	I²C Address
0	0	0101 100
0	1	0101 101
1	0	0101 110
1	1	0101 111

Data Transfer

Data is transferred over the I²C serial interface in 8-bit bytes. The master initiates a data transfer by establishing a start condition, defined as a high-to-low transition on the serial data line, SDA, while the serial clock line, SCLK, remains high. This indicates that an address/data stream follows.

All slave peripherals connected to the serial bus respond to the start condition and shift in the next eight bits, consisting of a 7-bit address (MSB first) plus an R/$\overline{W}$ bit that determines the direction of the data transfer. The peripheral whose address corresponds to the transmitted address responds by pulling the data line low during the ninth clock pulse. This is known as the acknowledge bit. All other devices on the bus then remain idle while the selected device waits for data to be read from or written to it. If the R/$\overline{W}$ bit is 0, the master writes to the slave device. If the R/$\overline{W}$ bit is 1, the master reads from the slave device.

Data is sent over the serial bus in a sequence of nine clock pulses—eight bits of data followed by an acknowledge bit from the slave device. Transitions on the data line must occur during the low period of the clock signal and remain stable during the high period, because a low-to-high transition when the clock is high can be interpreted as a stop signal. The number of data bytes transmitted over the serial bus in a single read or write operation is limited only by what the master and slave devices can handle.

When all data bytes are read or written, a stop condition is established. A stop condition is defined by a low-to-high transition on SDA while SCLK remains high. If the AD7147 encounters a stop condition, it returns to its idle condition, and the address pointer register resets to Address 0x00.

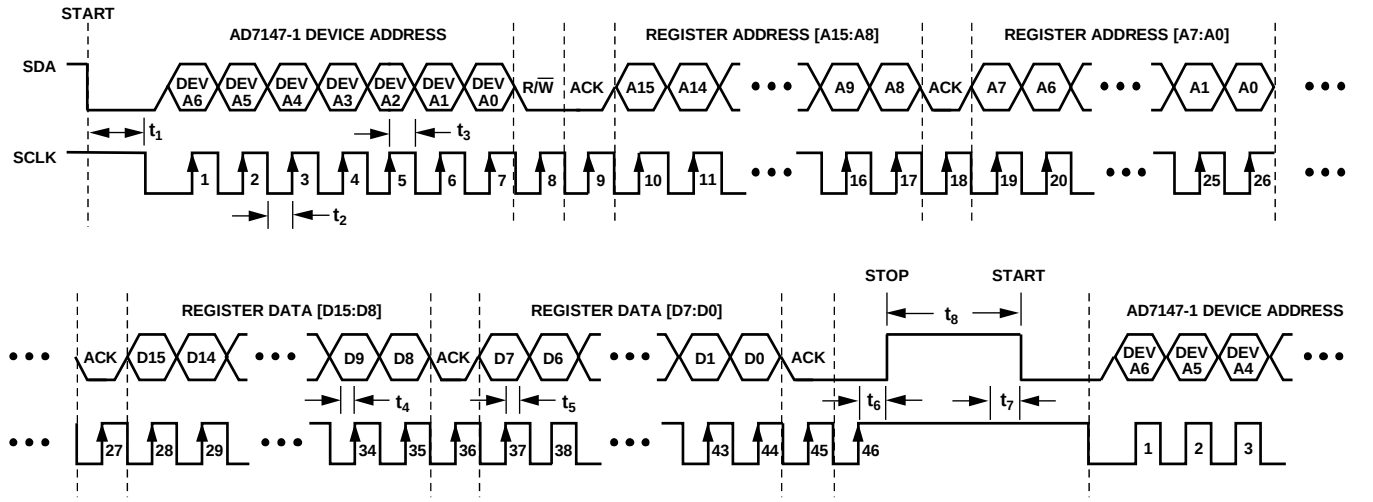

NOTES
1. A START CONDITION AT THE BEGINNING IS DEFINED AS A HIGH-TO-LOW TRANSITION ON SDA WHILE SCLK REMAINS HIGH.
2. A STOP CONDITION AT THE END IS DEFINED AS A LOW-TO-HIGH TRANSITION ON SDA WHILE SCLK REMAINS HIGH.
3. 7-BIT DEVICE ADDRESS [DEV A6:DEV A0] = [0 1 0 1 1 X X], WHERE X IS A DON'T CARE BIT.
4. 16-BIT REGISTER ADDRESS [A15:A0] = [X, X, X, X, X, X, A9, A8, A7, A6, A5, A4, A3, A2, A1, A0], WHERE X IS A DON'T CARE BIT.
5. REGISTER ADDRESS [A15:A8] AND REGISTER ADDRESS [A7:A0] ARE ALWAYS SEPARATED BY A LOW ACK BIT.
6. REGISTER DATA [D15:D8] AND REGISTER DATA [D7:D0] ARE ALWAYS SEPARATED BY A LOW ACK BIT.

Figure 53. Example of I²C Timing for Single Register Write Operation

Writing Data over the I²C Bus

The process for writing to the AD7147-1 over the I²C bus is shown in Figure 53 and Figure 55. The device address is sent over the bus, followed by the R/$\overline{W}$ bit being set to 0 and then two bytes of data that contain the 10-bit address of the internal data register to be written. The following bit map shows the upper register address bytes. Note that Bit 7 to Bit 2 in the upper address byte are don't care bits. The address is contained in the 10 LSBs of the register address bytes.

MSB							LSB
7	**6**	**5**	**4**	**3**	**2**	**1**	**0**
X	X	X	X	X	X	Register Address Bit 9	Register Address Bit 8

The following bit map shows the lower register address bytes.

MSB							LSB
7	**6**	**5**	**4**	**3**	**2**	**1**	**0**
Reg Add Bit 7	Reg Add Bit 6	Reg Add Bit 5	Reg Add Bit 4	Reg Add Bit 3	Reg Add Bit 2	Reg Add Bit 1	Reg Add Bit 0

The third data byte contains the eight MSBs of the data to be written to the internal register. The fourth data byte contains the eight LSBs of data to be written to the internal register.

The AD7147-1 address pointer register automatically increments after each write. This allows the master to sequentially write to all registers on the AD7147-1 in the same write transaction. However, the address pointer register does not wrap around after the last address. Therefore, any data written to the AD7147-1 after the address pointer has reached its maximum value is discarded.

All registers on the AD7147-1 are 16 bits. Two consecutive 8-bit data bytes are combined and written to the 16-bit registers. To avoid errors, all writes to the device must contain an even number of data bytes.

To finish the transaction, the master generates a stop condition on SDO, or generates a repeat start condition if the master is to maintain control of the bus.

Reading Data over the I²C Bus

To read from the AD7147-1, the address pointer register must first be set to the address of the required internal register. The master performs a write transaction, and then writes to the AD7147-1 to set the address pointer. Next, the master outputs a repeat start condition to keep control of the bus, or if this is not possible, ends the write transaction with a stop condition. A read transaction is initiated, with the R/$\overline{W}$ bit set to 1.

The AD7147-1 supplies the upper eight bits of data from the addressed register in the first readback byte, followed by the lower eight bits in the next byte. This is shown in Figure 54 and Figure 55.

Because the address pointer automatically increments after each read, the AD7147-1 continues to output readback data until the master sends a no acknowledge and stop condition to the bus. If the address pointer reaches its maximum value and the master continues to read from the part, the AD7147-1 repeatedly sends data from the last register that was addressed.

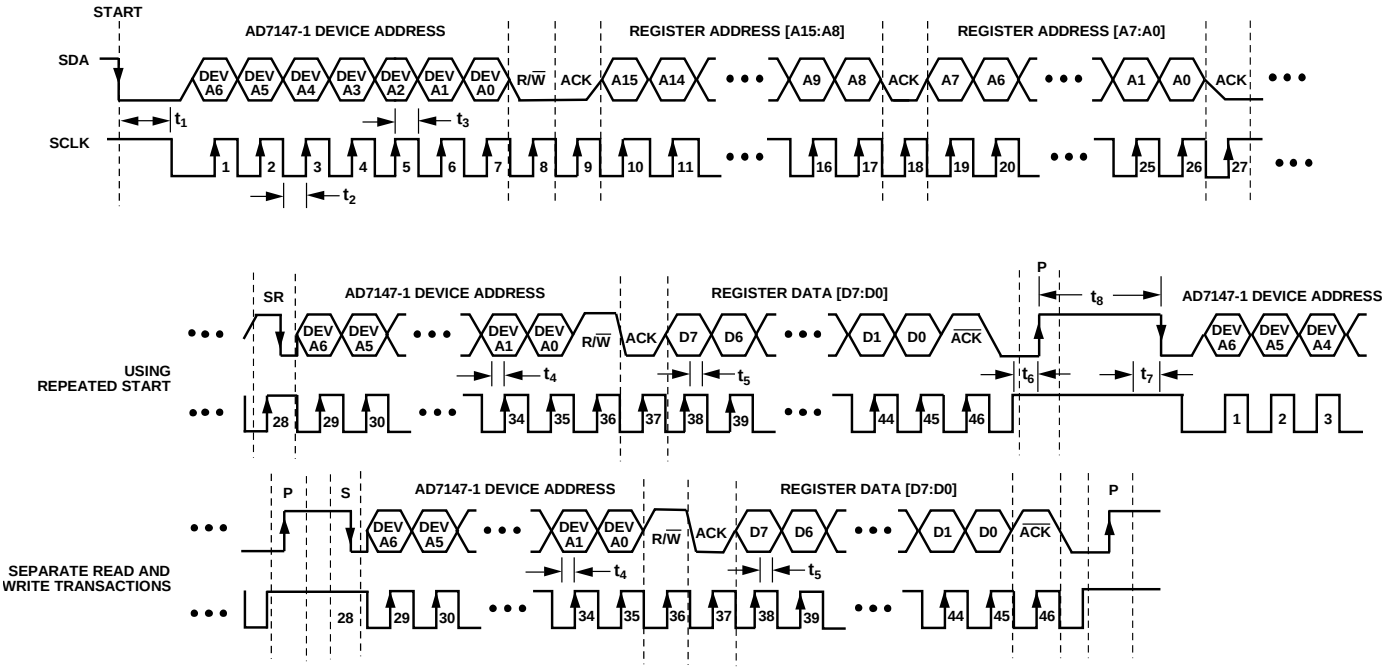

Figure 54. Example of I²C Timing for Single Register Readback Operation

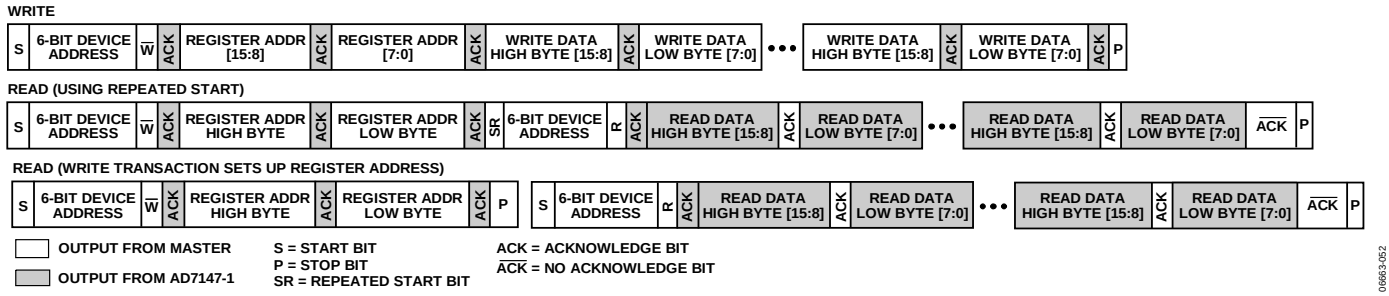

Figure 55. Example of Sequential I²C Write and Readback Operations

V_{DRIVE} INPUT

The supply voltage for the pins (SDO, SDI, SCLK, SDA, $\overline{CS}$, $\overline{INT}$, and GPIO) associated with both the I²C and SPI serial interfaces is supplied from the V_{DRIVE} pin and is separate from the main V_{CC} supply.

This allows the AD7147 to be connected directly to processors whose supply voltage is less than the minimum operating voltage of the AD7147 without the need for external level-shifters. The V_{DRIVE} pin can be connected to voltage supplies as low as 1.65 V and as high as V_{CC}.

PCB DESIGN GUIDELINES

CAPACITIVE SENSOR BOARD MECHANICAL SPECIFICATIONS

Table 19.

Parameter	Symbol	Min	Typ	Max	Unit
Distance from Edge of Any Sensor to Edge of Grounded Metal Object	D_1	0.1			mm
Distance Between Sensor Edges[1]	$D_2 = D_3 = D_4$	0			mm
Distance Between Bottom of Sensor Board and Controller Board or Grounded Metal Casing[2]	D_5		1.0		mm

[1] The distance is dependent on the application and the position of the switches relative to each other and with respect to the user's finger position and handling. Adjacent sensors with no space between them are implemented differentially.

[2] The 1.0 mm specification is intended to prevent direct sensor board contact with any conductive material. This specification, however, does not guarantee an absence of EMI coupling from the controller board to the sensors. To avoid potential EMI-coupling issues, place a grounded metal shield between the capacitive sensor board and the main controller board, as shown in Figure 58.

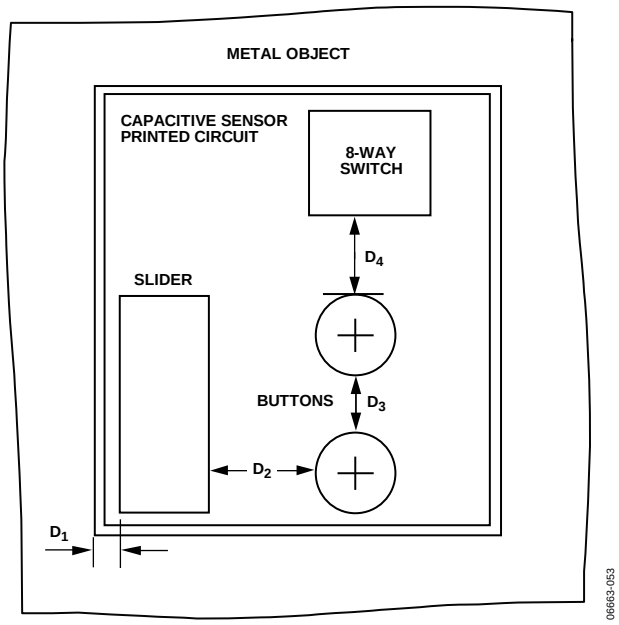

Figure 56. Capacitive Sensor Board, Top View

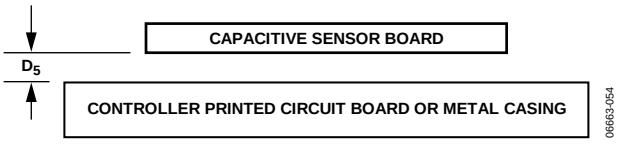

Figure 57. Capacitive Sensor Board, Side View

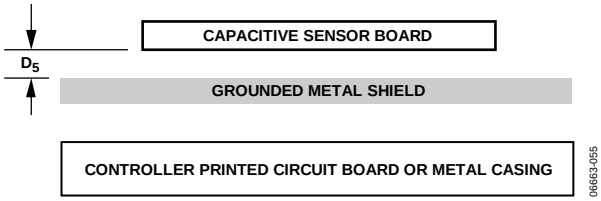

Figure 58. Capacitive Sensor Board with Grounded Shield

CHIP SCALE PACKAGES

The lands on the chip scale package (CP-24-3) are rectangular. The PCB pad for these should be 0.1 mm longer than the package land length and 0.05 mm wider than the package land width. Center the land on the pad to maximize the solder joint size.

The bottom of the chip scale package has a central thermal pad. The thermal pad on the printed circuit board should be at least as large as this exposed pad. To avoid shorting, provide a clearance of at least 0.25 mm between the thermal pad and the inner edges of the land pattern on the PCB.

Thermal vias can be used on the PCB thermal pad to improve the thermal performance of the package. If vias are used, they should be incorporated in the thermal pad at a 1.2 mm pitch grid. The via diameter should be between 0.3 mm and 0.33 mm, and the via barrel should be plated with 1 oz copper to plug the via. Connect the PCB thermal pad to GND.

POWER-UP SEQUENCE

To power up the AD7147, use the following sequence when initially developing the AD7147 and microprocessor serial interface:

1. Turn on the power supplies to the AD7147.
2. Write to the Bank 2 registers at Address 0x080 through Address 0x0DF. These registers are contiguous; therefore, a sequential register write sequence can be applied.

   Note that the Bank 2 register values are unique for each application. Register values come from characterization of the sensor in the application.
3. Write to the Bank 1 registers at Address 0x000 through Address 0x007, outlined as follows. These registers are contiguous; therefore, a sequential register write sequence can be applied (see Figure 50 and Figure 55).

   Caution: At this time, Address 0x001 must remain set to a default value of 0x0000 during this contiguous write operation.

   Register values:

   Address 0x000 = 0x82B2

   Address 0x001 = 0x000

   Address 0x002 = 0x3230 (depends on number of conversion stages used)

   Address 0x003 = 0x419

   Address 0x004 = 832

   Address 0x005 = interrupt enable register (depends on required interrupt behavior)

   Address 0x006 = interrupt enable register (depends on required interrupt behavior)

   Address 0x007 = interrupt enable register (depends on required interrupt behavior)
4. Write to the Bank 1 register, Address 0x001 = 0x0FFF (depends on number of conversion stages used).
5. Read back the corresponding interrupt status register at Address 0x008, Address 0x009, or Address 0x00A. This is determined by the interrupt output configuration, as explained in the Interrupt Output section.

   Note that the specific registers required to be read back depend on each application. For buttons, the interrupt status registers are read back while other sensors read data back from the AD7147 according to the slider or wheel algorithm's requirements. Analog Devices can provide this information after the user develops the sensor board.
6. Repeat Step 5 every time $\overline{\text{INT}}$ is asserted.

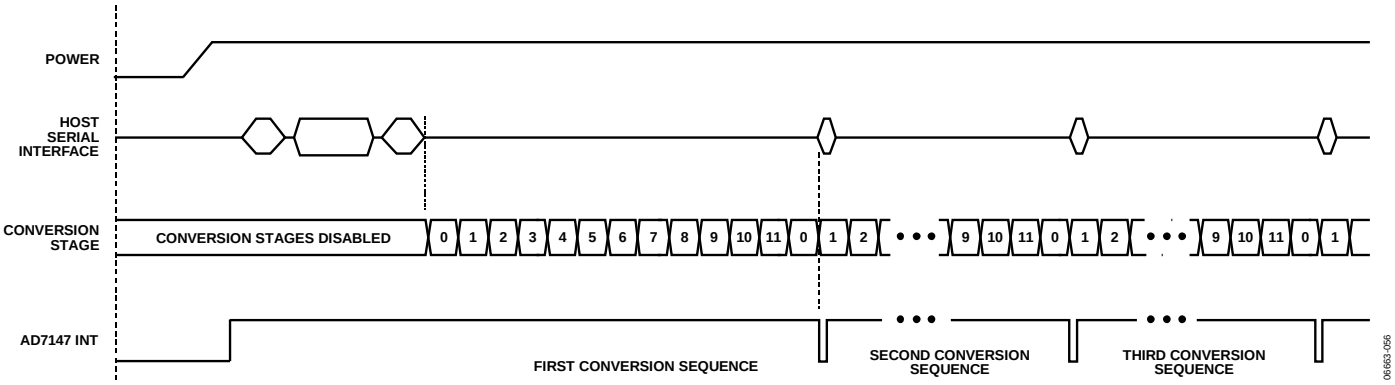

Figure 59. Recommended Start-Up Sequence

TYPICAL APPLICATION CIRCUITS

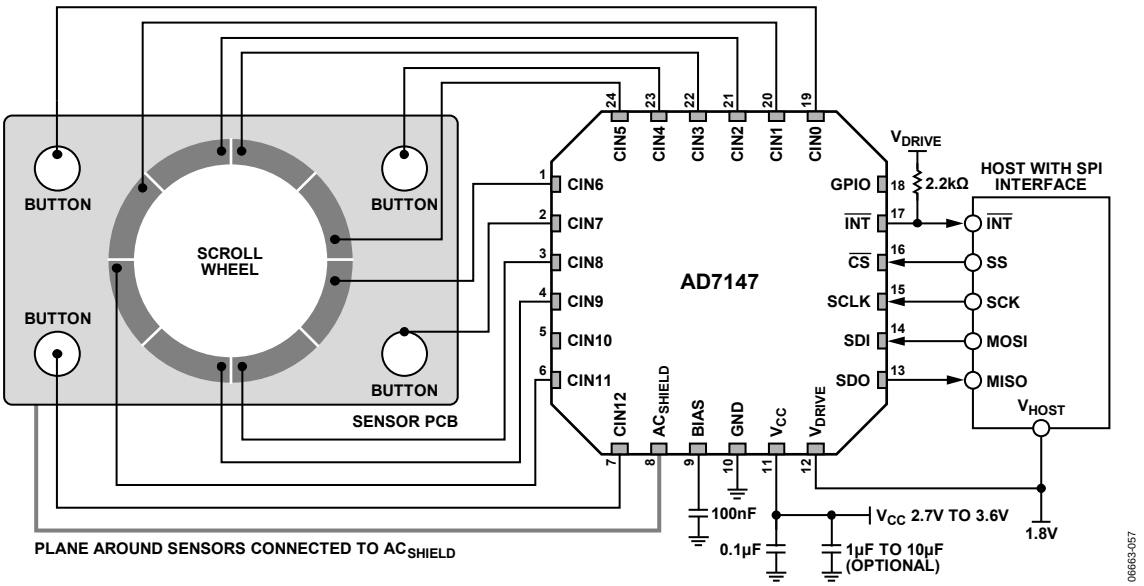

Figure 60. Typical Application Circuit with SPI Interface

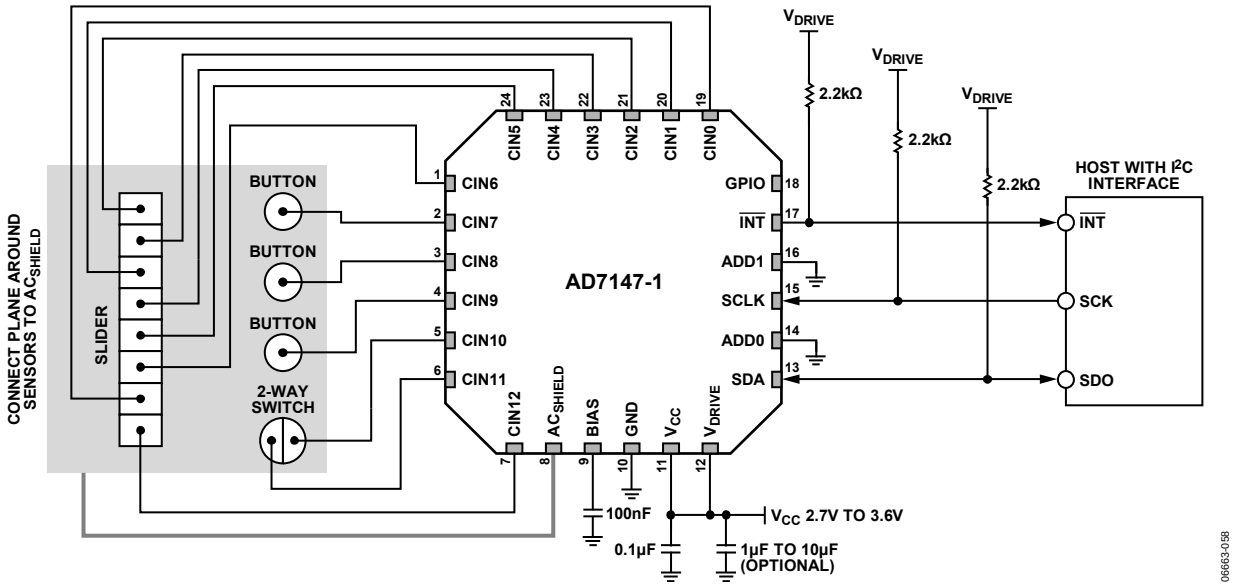

Figure 61. Typical Application Circuit with I²C Interface

REGISTER MAP

The AD7147 address space is divided into three register banks, referred to as Bank 1, Bank 2, and Bank 3. Figure 62 illustrates the division of these banks.

Bank 1 registers contain control registers, CDC conversion control registers, interrupt enable registers, interrupt status registers, CDC 16-bit conversion data registers, device ID registers, and proximity status registers.

Bank 2 registers contain the configuration registers used to configure the individual CINx inputs for each conversion stage. Initialize the Bank 2 configuration registers immediately after power-up to obtain valid CDC conversion result data.

Bank 3 registers contain the results of each conversion stage. These registers automatically update at the end of each conversion sequence. Although these registers are primarily used by the AD7147 internal data processing, they are accessible by the host processor for additional external data processing, if desired.

Default values are undefined for Bank 2 registers and Bank 3 registers until after power-up and configuration of the Bank 2 registers.

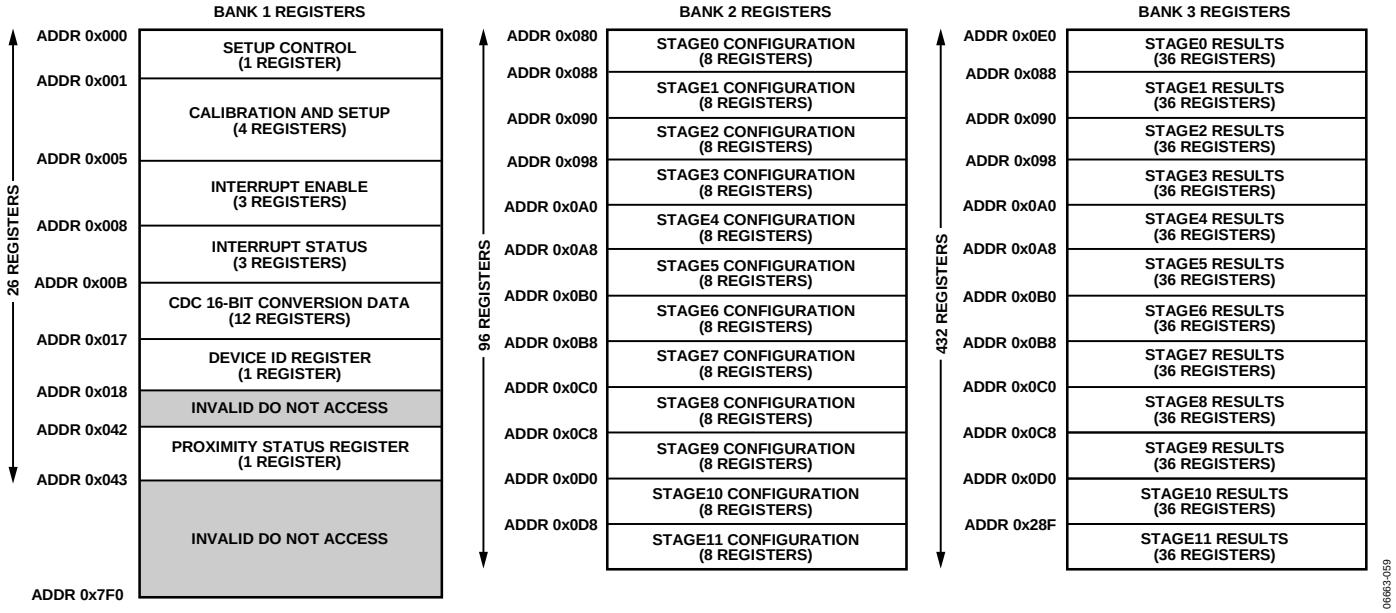

Figure 62. Layout of Bank 1, Bank 2, and Bank 3 Registers

DETAILED REGISTER DESCRIPTIONS

BANK 1 REGISTERS

All addresses and default values are expressed in hexadecimal.

Table 20. PWR_CONTROL Register

Address	Data Bit	Default Value	Type	Name	Description
0x000	[1:0]	0	R/W	POWER_MODE	Operating modes 00 = full power mode (normal operation, CDC conversions approximately every 36 ms) 01 = full shutdown mode (no CDC conversions) 10 = low power mode (automatic wake-up operation) 11 = full shutdown mode (no CDC conversions)
	[3:2]	0	R/W	LP_CONV_DELAY	Low power mode conversion delay 00 = 200 ms 01 = 400 ms 10 = 600 ms 11 = 800 ms
	[7:4]	0	R/W	SEQUENCE_STAGE_NUM	Number of stages in sequence (N + 1) 0000 = 1 conversion stage in sequence 0001 = 2 conversion stages in sequence … Maximum value = 1011 = 12 conversion stages per sequence
	[9:8]	0	R/W	DECIMATION	ADC decimation factor 00 = decimate by 256 01 = decimate by 128 10 = decimate by 64 11 = decimate by 64
	[10]	0	R/W	SW_RESET	Software reset control (self-clearing) 1 = resets all registers to default values
	[11]	0	R/W	INT_POL	Interrupt polarity control 0 = active low 1 = active high
	[12]	0	R/W	EXT_SOURCE	Excitation source control 0 = enable excitation source to CINx pins 1 = disable excitation source to CINx pins
	[13]	0		Unused	Set to 0
	[15:14]	0	R/W	CDC_BIAS	CDC bias current control 00 = normal operation 01 = normal operation + 20% 10 = normal operation + 35% 11 = normal operation + 50%

Table 21. STAGE_CAL_EN Register

Address	Data Bit	Default Value	Type	Name	Description
0x001	[0]	0	R/W	STAGE0_CAL_EN	STAGE0 calibration enable 0 = disable 1 = enable
	[1]	0	R/W	STAGE1_CAL_EN	STAGE1 calibration enable 0 = disable 1 = enable
	[2]	0	R/W	STAGE2_CAL_EN	STAGE2 calibration enable 0 = disable 1 = enable
	[3]	0	R/W	STAGE3_CAL_EN	STAGE3 calibration enable 0 = disable 1 = enable
	[4]	0	R/W	STAGE4_CAL_EN	STAGE4 calibration enable 0 = disable 1 = enable
	[5]	0	R/W	STAGE5_CAL_EN	STAGE5 calibration enable 0 = disable 1 = enable
	[6]	0	R/W	STAGE6_CAL_EN	STAGE6 calibration enable 0 = disable 1 = enable
	[7]	0	R/W	STAGE7_CAL_EN	STAGE7 calibration enable 0 = disable 1 = enable
	[8]	0	R/W	STAGE8_CAL_EN	STAGE8 calibration enable 0 = disable 1 = enable
	[9]	0	R/W	STAGE9_CAL_EN	STAGE9 calibration enable 0 = disable 1 = enable
	[10]	0	R/W	STAGE10_CAL_EN	STAGE10 calibration enable 0 = disable 1 = enable
	[11]	0	R/W	STAGE11_CAL_EN	STAGE11 calibration enable 0 = disable 1 = enable
	[13:12]	0	R/W	AVG_FP_SKIP	Full power mode skip control 00 = skip 3 samples 01 = skip 7 samples 10 = skip 15 samples 11 = skip 31 samples
	[15:14]	0	R/W	AVG_LP_SKIP	Low power mode skip control 00 = use all samples 01 = skip one sample 10 = skip two samples 11 = skip three samples

Table 22. AMB_COMP_CTRL0 Register

Address	Data Bit	Default Value	Type	Name	Description
0x002	[3:0]	0	R/W	FF_SKIP_CNT	Fast filter skip control (N + 1) 0000 = no sequence of results is skipped 0001 = one sequence of results is skipped for every one allowed into fast FIFO 0010 = two sequences of results are skipped for every one allowed into fast FIFO 1011 = maximum value = 12 sequences of results are skipped for every one allowed into fast FIFO
	[7:4]	F	R/W	FP_PROXIMITY_CNT	Calibration disable period in full power mode = FP_PROXIMITY_CNT × 16 × time for one conversion sequence in full power mode
	[11:8]	F	R/W	LP_PROXIMITY_CNT	Calibration disable period in low power mode = LP_PROXIMITY_CNT × 4 × time for one conversion sequence in low power mode
	[13:12]	0	R/W	PWR_DOWN_TIMEOUT	Full power to low power mode timeout control 00 = 1.25 × (FP_PROXIMITY_CNT) 01 = 1.50 × (FP_PROXIMITY_CNT) 10 = 1.75 × (FP_PROXIMITY_CNT) 11 = 2.00 × (FP_PROXIMITY_CNT)
	[14]	0	R/W	FORCED_CAL	Forced calibration control 0 = normal operation 1 = forces all conversion stages to recalibrate
	[15]	0	R/W	CONV_RESET	Conversion reset control (self-clearing) 0 = normal operation 1 = resets the conversion sequence to STAGE0

Table 23. AMB_COMP_CTRL1 Register

Address	Data Bit	Default Value	Type	Name	Description
0x003	[7:0]	64	R/W	PROXIMITY_RECAL_LVL	Proximity recalibration level; the value is multiplied by 16 to determine actual recalibration level
	[13:8]	1	R/W	PROXIMITY_DETECTION_RATE	Proximity detection rate; the value is multiplied by 16 to determine actual detection rate
	[15:14]	0	R/W	SLOW_FILTER_UPDATE_LVL	Slow filter update level

Table 24. AMB_COMP_CTRL2 Register

Address	Data Bit	Default Value	Type	Name	Description
0x004	[9:0]	3FF	R/W	FP_PROXIMITY_RECAL	Full power mode proximity recalibration time control
	[15:10]	3F	R/W	LP_PROXIMITY_RECAL	Low power mode proximity recalibration time control

Table 25. STAGE_LOW_INT_ENABLE Register

Address	Data Bit	Default Value	Type	Name	Description
0x005	[0]	0	R/W	STAGE0_LOW_INT_ENABLE	STAGE0 low interrupt enable 0 = interrupt source disabled 1 = $\overline{\text{INT}}$ asserted if STAGE0 low threshold is exceeded
	[1]	0	R/W	STAGE1_LOW_INT_ENABLE	STAGE1 low interrupt enable 0 = interrupt source disabled 1 = $\overline{\text{INT}}$ asserted if STAGE1 low threshold is exceeded
	[2]	0	R/W	STAGE2_LOW_INT_ENABLE	STAGE2 low interrupt enable 0 = interrupt source disabled 1 = $\overline{\text{INT}}$ asserted if STAGE2 low threshold is exceeded
	[3]	0	R/W	STAGE3_LOW_INT_ENABLE	STAGE3 low interrupt enable 0 = interrupt source disabled 1 = $\overline{\text{INT}}$ asserted if STAGE3 low threshold is exceeded
	[4]	0	R/W	STAGE4_LOW_INT_ENABLE	STAGE4 low interrupt enable 0 = interrupt source disabled 1 = $\overline{\text{INT}}$ asserted if STAGE4 low threshold is exceeded
	[5]	0	R/W	STAGE5_LOW_INT_ENABLE	STAGE5 low interrupt enable 0 = interrupt source disabled 1 = $\overline{\text{INT}}$ asserted if STAGE5 low threshold is exceeded
	[6]	0	R/W	STAGE6_LOW_INT_ENABLE	STAGE6 low interrupt enable 0 = interrupt source disabled 1 = $\overline{\text{INT}}$ asserted if STAGE6 low threshold is exceeded
	[7]	0	R/W	STAGE7_LOW_INT_ENABLE	STAGE7 low interrupt enable 0 = interrupt source disabled 1 = $\overline{\text{INT}}$ asserted if STAGE7 low threshold is exceeded
	[8]	0	R/W	STAGE8_LOW_INT_ENABLE	STAGE8 low interrupt enable 0 = interrupt source disabled 1 = $\overline{\text{INT}}$ asserted if STAGE8 low threshold is exceeded
	[9]	0	R/W	STAGE9_LOW_INT_ENABLE	STAGE9 low interrupt enable 0 = interrupt source disabled 1 = $\overline{\text{INT}}$ asserted if STAGE9 low threshold is exceeded
	[10]	0	R/W	STAGE10_LOW_INT_ENABLE	STAGE10 low interrupt enable 0 = interrupt source disabled 1 = $\overline{\text{INT}}$ asserted if STAGE10 low threshold is exceeded
	[11]	0	R/W	STAGE11_LOW_INT_ENABLE	STAGE11 low interrupt enable 0 = interrupt source disabled 1 = $\overline{\text{INT}}$ asserted if STAGE11 low threshold is exceeded
	[13:12]	0	R/W	GPIO_SETUP	GPIO setup 00 = disable GPIO pin 01 = configure GPIO as an input 10 = configure GPIO as an active low output 11 = configure GPIO as an active high output
	[15:14]	0	R/W	GPIO_INPUT_CONFIG	GPIO input configuration 00 = triggered on negative level 01 = triggered on positive edge 10 = triggered on negative edge 11 = triggered on positive level

Table 26. STAGE_HIGH_INT_ENABLE Register

Address	Data Bit	Default Value	Type	Name	Description
0x006	[0]	0	R/W	STAGE0_HIGH_INT_ENABLE	STAGE0 high interrupt enable 0 = interrupt source disabled 1 = $\overline{\text{INT}}$ asserted if STAGE0 high threshold is exceeded
	[1]	0	R/W	STAGE1_HIGH_INT_ENABLE	STAGE1 high interrupt enable 0 = interrupt source disabled 1 = $\overline{\text{INT}}$ asserted if STAGE1 high threshold is exceeded
	[2]	0	R/W	STAGE2_HIGH_INT_ENABLE	STAGE2 high interrupt enable 0 = interrupt source disabled 1 = $\overline{\text{INT}}$ asserted if STAGE2 high threshold is exceeded
	[3]	0	R/W	STAGE3_HIGH_INT_ENABLE	STAGE3 high interrupt enable 0 = interrupt source disabled 1 = $\overline{\text{INT}}$ asserted if STAGE3 high threshold is exceeded
	[4]	0	R/W	STAGE4_HIGH_INT_ENABLE	STAGE4 high interrupt enable 0 = interrupt source disabled 1 = $\overline{\text{INT}}$ asserted if STAGE4 high threshold is exceeded
	[5]	0	R/W	STAGE5_HIGH_INT_ENABLE	STAGE5 high interrupt enable 0 = interrupt source disabled 1 = $\overline{\text{INT}}$ asserted if STAGE5 high threshold is exceeded
	[6]	0	R/W	STAGE6_HIGH_INT_ENABLE	STAGE6 high interrupt enable 0 = interrupt source disabled 1 = $\overline{\text{INT}}$ asserted if STAGE6 high threshold is exceeded
	[7]	0	R/W	STAGE7_HIGH_INT_ENABLE	STAGE7 high interrupt enable 0 = interrupt source disabled 1 = $\overline{\text{INT}}$ asserted if STAGE7 high threshold is exceeded
	[8]	0	R/W	STAGE8_HIGH_INT_ENABLE	STAGE8 high interrupt enable 0 = interrupt source disabled 1 = $\overline{\text{INT}}$ asserted if STAGE8 high threshold is exceeded
	[9]	0	R/W	STAGE9_HIGH_INT_ENABLE	STAGE9 sensor high interrupt enable 0 = interrupt source disabled 1 = $\overline{\text{INT}}$ asserted if STAGE9 high threshold is exceeded
	[10]	0	R/W	STAGE10_HIGH_INT_ENABLE	STAGE10 high interrupt enable 0 = interrupt source disabled 1 = $\overline{\text{INT}}$ asserted if STAGE10 high threshold is exceeded
	[11]	0	R/W	STAGE11_HIGH_INT_ENABLE	STAGE11 high interrupt enable 0 = interrupt source disabled 1 = $\overline{\text{INT}}$ asserted if STAGE11 high threshold is exceeded
	[15:12]			Unused	Set to 0

Table 27. STAGE_COMPLETE_INT_ENABLE Register

Address	Data Bit	Default Value	Type	Name	Description
0x007	[0]	0	R/W	STAGE0_COMPLETE_INT_ENABLE	STAGE0 conversion interrupt control 0 = interrupt source disabled 1 = $\overline{\text{INT}}$ asserted at completion of STAGE0 conversion
	[1]	0	R/W	STAGE1_COMPLETE_INT_ENABLE	STAGE1 conversion interrupt control 0 = interrupt source disabled 1 = $\overline{\text{INT}}$ asserted at completion of STAGE1 conversion
	[2]	0	R/W	STAGE2_COMPLETE_INT_ENABLE	STAGE2 conversion interrupt control 0 = interrupt source disabled 1 = $\overline{\text{INT}}$ asserted at completion of STAGE2 conversion
	[3]	0	R/W	STAGE3_COMPLETE_INT_ENABLE	STAGE3 conversion interrupt control 0 = interrupt source disabled 1 = $\overline{\text{INT}}$ asserted at completion of STAGE3 conversion
	[4]	0	R/W	STAGE4_COMPLETE_INT_ENABLE	STAGE4 conversion interrupt control 0 = interrupt source disabled 1 = $\overline{\text{INT}}$ asserted at completion of STAGE4 conversion
	[5]	0	R/W	STAGE5_COMPLETE_INT_ENABLE	STAGE5 conversion interrupt control 0 = interrupt source disabled 1 = $\overline{\text{INT}}$ asserted at completion of STAGE5 conversion
	[6]	0	R/W	STAGE6_COMPLETE_INT_ENABLE	STAGE6 conversion interrupt control 0 = interrupt source disabled 1 = $\overline{\text{INT}}$ asserted at completion of STAGE6 conversion
	[7]	0	R/W	STAGE7_COMPLETE_INT_ENABLE	STAGE7 conversion interrupt control 0 = interrupt source disabled 1 = $\overline{\text{INT}}$ asserted at completion of STAGE7 conversion
	[8]	0	R/W	STAGE8_COMPLETE_INT_ENABLE	STAGE8 conversion complete interrupt control 0 = interrupt source disabled 1 = $\overline{\text{INT}}$ asserted at completion of STAGE8 conversion
	[9]	0	R/W	STAGE9_COMPLETE_INT_ENABLE	STAGE9 conversion interrupt control 0 = interrupt source disabled 1 = $\overline{\text{INT}}$ asserted at completion of STAGE9 conversion
	[10]	0	R/W	STAGE10_COMPLETE_INT_ENABLE	STAGE10 conversion interrupt control 0 = interrupt source disabled 1 = $\overline{\text{INT}}$ asserted at completion of STAGE10 conversion
	[11]	0	R/W	STAGE11_COMPLETE_INT_ENABLE	STAGE11 conversion interrupt control 0 = interrupt source disabled 1 = $\overline{\text{INT}}$ asserted at completion of STAGE11 conversion
	[12]	0	R/W	GPIO_INT_ENABLE	Interrupt control when GPIO input pin changes level 0 = disabled 1 = enabled
	[15:13]			Unused	Set to 0

Table 28. STAGE_LOW_INT_STATUS Register[1]

Address	Data Bit	Default Value	Type	Name	Description
0x008	[0]	0	R	STAGE0_LOW_INT_STATUS	STAGE0 CDC conversion low limit interrupt result 1 = indicates STAGE0_LOW_THRESHOLD value was exceeded
	[1]	0	R	STAGE1_LOW_INT_STATUS	STAGE1 CDC conversion low limit interrupt result 1 = indicates STAGE1_LOW_THRESHOLD value was exceeded
	[2]	0	R	STAGE2_LOW_INT_STATUS	STAGE2 CDC conversion low limit interrupt result 1 = indicates STAGE2_LOW_THRESHOLD value was exceeded
	[3]	0	R	STAGE3_LOW_INT_STATUS	STAGE3 CDC conversion low limit interrupt result 1 = indicates STAGE3_LOW_THRESHOLD value was exceeded
	[4]	0	R	STAGE4_LOW_INT_STATUS	STAGE4 CDC conversion low limit interrupt result 1 = indicates STAGE4_LOW_THRESHOLD value was exceeded
	[5]	0	R	STAGE5_LOW_INT_STATUS	STAGE5 CDC conversion low limit interrupt result 1 = indicates STAGE5_LOW_THRESHOLD value was exceeded
	[6]	0	R	STAGE6_LOW_INT_STATUS	STAGE6 CDC conversion low limit interrupt result 1 = indicates STAGE6_LOW_THRESHOLD value was exceeded
	[7]	0	R	STAGE7_LOW_INT_STATUS	STAGE7 CDC conversion low limit interrupt result 1 = indicates STAGE7_LOW_THRESHOLD value was exceeded
	[8]	0	R	STAGE8_LOW_INT_STATUS	STAGE8 CDC conversion low limit interrupt result 1 = indicates STAGE8_LOW_THRESHOLD value was exceeded
	[9]	0	R	STAGE9_LOW_INT_STATUS	STAGE9 CDC conversion low limit interrupt result 1 = indicates STAGE9_LOW_THRESHOLD value was exceeded
	[10]	0	R	STAGE10_LOW_INT_STATUS	STAGE10 CDC Conversion Low Limit Interrupt result 1 = indicates STAGE10_LOW_THRESHOLD value was exceeded
	[11]	0	R	STAGE11_LOW_INT_STATUS	STAGE11 CDC conversion low limit interrupt result 1 = indicates STAGE11_LOW_THRESHOLD value was exceeded
	[15:12]			Unused	Set to 0

[1] Registers self-clear to 0 after readback if the limits are not exceeded.

Table 29. STAGE_HIGH_INT_STATUS Register[1]

Address	Data Bit	Default Value	Type	Name	Description
0x009	[0]	0	R	STAGE0_HIGH_INT_STATUS	STAGE0 CDC conversion high limit interrupt result 1 = indicates STAGE0_HIGH_THRESHOLD value was exceeded
	[1]	0	R	STAGE1_HIGH_INT_STATUS	STAGE1 CDC conversion high limit interrupt result 1 = indicates STAGE1_HIGH_THRESHOLD value was exceeded
	[2]	0	R	STAGE2_HIGH_INT_STATUS	Stage2 CDC conversion high limit interrupt result 1 = indicates STAGE2_HIGH_THRESHOLD value was exceeded
	[3]	0	R	STAGE3_HIGH_INT_STATUS	STAGE3 CDC conversion high limit interrupt result 1 = indicates STAGE3_HIGH_THRESHOLD value was exceeded
	[4]	0	R	STAGE4_HIGH_INT_STATUS	STAGE4 CDC conversion high limit interrupt result 1 = indicates STAGE4_HIGH_THRESHOLD value was exceeded
	[5]	0	R	STAGE5_HIGH_INT_STATUS	STAGE5 CDC conversion high limit interrupt result 1 = indicates STAGE5_HIGH_THRESHOLD value was exceeded
	[6]	0	R	STAGE6_HIGH_INT_STATUS	STAGE6 CDC conversion high limit interrupt result 1 = indicates STAGE6_HIGH_THRESHOLD value was exceeded
	[7]	0	R	STAGE7_HIGH_INT_STATUS	STAGE7 CDC conversion high limit interrupt result 1 = indicates STAGE7_HIGH_THRESHOLD value was exceeded
	[8]	0	R	STAGE8_HIGH_INT_STATUS	STAGE8 CDC conversion high limit interrupt result 1 = indicates STAGE8_HIGH_THRESHOLD value was exceeded
	[9]	0	R	STAGE9_HIGH_INT_STATUS	STAGE9 CDC conversion high limit interrupt result 1 = indicates STAGE9_HIGH_THRESHOLD value was exceeded
	[10]	0	R	STAGE10_HIGH_INT_STATUS	STAGE10 CDC conversion high limit interrupt result 1 = indicates STAGE10_HIGH_THRESHOLD value was exceeded
	[11]	0	R	STAGE11_HIGH_INT_STATUS	STAGE11 CDC conversion high limit interrupt result 1 = indicates STAGE11_HIGH_THRESHOLD value was exceeded
	[15:12]			Unused	Set to 0

[1] Registers self-clear to 0 after readback if the limits are not exceeded.

Table 30. STAGE_COMPLETE_INT_STATUS Register[1]

Address	Data Bit	Default Value	Type	Name	Description
0x00A	[0]	0	R	STAGE0_COMPLETE_INT_STATUS	STAGE0 conversion complete register interrupt status 1 = indicates STAGE0 conversion completed
	[1]	0	R	STAGE1_COMPLETE_INT_STATUS	STAGE1 conversion complete register interrupt status 1 = indicates STAGE1 conversion completed
	[2]	0	R	STAGE2_COMPLETE_INT_STATUS	STAGE2 conversion complete register interrupt status 1 = indicates STAGE2 conversion completed
	[3]	0	R	STAGE3_COMPLETE_INT_STATUS	STAGE3 conversion complete register interrupt status 1 = indicates STAGE3 conversion completed
	[4]	0	R	STAGE4_COMPLETE_INT_STATUS	STAGE4 conversion complete register interrupt status 1 = indicates STAGE4 conversion completed
	[5]	0	R	STAGE5_COMPLETE_INT_STATUS	STAGE5 conversion complete register interrupt status 1 = indicates STAGE5 conversion completed
	[6]	0	R	STAGE6_COMPLETE_INT_STATUS	STAGE6 conversion complete register interrupt status 1 = indicates STAGE6 conversion completed
	[7]	0	R	STAGE7_COMPLETE_INT_STATUS	STAGE7 conversion complete register interrupt status 1 = indicates STAGE7 conversion completed
	[8]	0	R	STAGE8_COMPLETE_INT_STATUS	STAGE8 conversion complete register interrupt status 1 = indicates STAGE8 conversion completed
	[9]	0	R	STAGE9_COMPLETE_INT_STATUS	STAGE9 conversion complete register interrupt status 1 = indicates STAGE9 conversion completed
	[10]	0	R	STAGE10_COMPLETE_INT_STATUS	STAGE10 conversion complete register interrupt status 1 = indicates STAGE10 conversion completed
	[11]	0	R	STAGE11_COMPLETE_INT_STATUS	STAGE11 conversion complete register interrupt status 1 = indicates STAGE11 conversion completed
	[12]	0	R	GPIO_INT_STATUS	GPIO input pin status 1 = indicates level on GPIO pin has changed
	[15:13]			Unused	Set to 0

[1] Registers self-clear to 0 after readback if the limits are not exceeded.

Table 31. CDC 16-Bit Conversion Data Registers

Address	Data Bit	Default Value	Type	Name	Description
0x00B	[15:0]	0	R	CDC_RESULT_S0	STAGE0 CDC 16-bit conversion data
0x00C	[15:0]	0	R	CDC_RESULT_S1	STAGE1 CDC 16-bit conversion data
0x00D	[15:0]	0	R	CDC_RESULT_S2	STAGE2 CDC 16-bit conversion data
0x00E	[15:0]	0	R	CDC_RESULT_S3	STAGE3 CDC 16-bit conversion data
0x00F	[15:0]	0	R	CDC_RESULT_S4	STAGE4 CDC 16-bit conversion data
0x010	[15:0]	0	R	CDC_RESULT_S5	STAGE5 CDC 16-bit conversion data
0x011	[15:0]	0	R	CDC_RESULT_S6	STAGE6 CDC 16-bit conversion data
0x012	[15:0]	0	R	CDC_RESULT_S7	STAGE7 CDC 16-bit conversion data
0x013	[15:0]	0	R	CDC_RESULT_S8	STAGE8 CDC 16-bit conversion data
0x014	[15:0]	0	R	CDC_RESULT_S9	STAGE9 CDC 16-bit conversion data
0x015	[15:0]	0	R	CDC_RESULT_S10	STAGE10 CDC 16-bit conversion data
0x016	[15:0]	0	R	CDC_RESULT_S11	STAGE11 CDC 16-bit conversion data

Table 32. Device ID Register

Address	Data Bit	Default Value	Type	Name	Description
0x017	[3:0]	0	R	REVISION_CODE	Revision code
	[15:4]	147	R	DEVID	Device ID = 0001 0100 0111

Table 33. Proximity Status Register

Address	Data Bit	Default Value	Type	Name	Description
0x042	[0]	0	R	STAGE0_PROXIMITY_STATUS	STAGE0 proximity status register 1 = indicates proximity has been detected on STAGE0
	[1]	0	R	STAGE1_PROXIMITY_STATUS	STAGE1 proximity status register 1 = indicates proximity has been detected on STAGE1
	[2]	0	R	STAGE2_PROXIMITY_STATUS	STAGE2 proximity status register 1 = indicates proximity has been detected on STAGE2
	[3]	0	R	STAGE3_PROXIMITY_STATUS	STAGE3 proximity status register 1 = indicates proximity has been detected on STAGE3
	[4]	0	R	STAGE4_PROXIMITY_STATUS	STAGE4 proximity status register 1 = indicates proximity has been detected on STAGE4
	[5]	0	R	STAGE5_PROXIMITY_STATUS	STAGE5 proximity status register 1 = indicates proximity has been detected on STAGE5
	[6]	0	R	STAGE6_PROXIMITY_STATUS	STAGE6 proximity status register 1 = indicates proximity has been detected on STAGE6
	[7]	0	R	STAGE7_PROXIMITY_STATUS	STAGE7 proximity status register 1 = indicates proximity has been detected on STAGE7
	[8]	0	R	STAGE8_PROXIMITY_STATUS	STAGE8 proximity status register 1 = indicates proximity has been detected on STAGE8
	[9]	0	R	STAGE9_PROXIMITY_STATUS	STAGE9 proximity status register 1 = indicates proximity has been detected on STAGE9
	[10]	0	R	STAGE10_PROXIMITY_STATUS	STAGE10 proximity status register 1 = indicates proximity has been detected on STAGE10
	[11]	0	R	STAGE11_PROXIMITY_STATUS	STAGE11 proximity status register 1 = indicates proximity has been detected on STAGE11
	[15:12]			Unused	Set to 0

BANK 2 REGISTERS

All address values are expressed in hexadecimal.

Table 34. STAGEx_CONNECTION[6:0] Register Description (x = 0 to 11)

Data Bit	Default Value	Type	Name	Description
[1:0]	X	R/W	CIN0_CONNECTION_SETUP	CIN0 connection setup 00 = CIN0 not connected to CDC inputs 01 = CIN0 connected to CDC negative input 10 = CIN0 connected to CDC positive input 11 = CIN0 connected to BIAS (connect unused CINx inputs)
[3:2]	X	R/W	CIN1_CONNECTION_SETUP	CIN1 connection setup 00 = CIN1 not connected to CDC inputs 01 = CIN1 connected to CDC negative input 10 = CIN1 connected to CDC positive input 11 = CIN1 connected to BIAS (connect unused CINx inputs)
[5:4]	X	R/W	CIN2_CONNECTION_SETUP	CIN2 connection setup 00 = CIN2 not connected to CDC inputs 01 = CIN2 connected to CDC negative input 10 = CIN2 connected to CDC positive input 11 = CIN2 connected to BIAS (connect unused CINx inputs)
[7:6]	X	R/W	CIN3_CONNECTION_SETUP	CIN3 connection setup 00 = CIN3 not connected to CDC inputs 01 = CIN3 connected to CDC negative input 10 = CIN3 connected to CDC positive input 11 = CIN3 connected to BIAS (connect unused CINx inputs)
[9:8]	X	R/W	CIN4_CONNECTION_SETUP	CIN4 connection setup 00 = CIN4 not connected to CDC inputs 01 = CIN4 connected to CDC negative input 10 = CIN4 connected to CDC positive input 11 = CIN4 connected to BIAS (connect unused CINx inputs)
[11:10]	X	R/W	CIN5_CONNECTION_SETUP	CIN5 connection setup 00 = CIN5 not connected to CDC inputs 01 = CIN5 connected to CDC negative input 10 = CIN5 connected to CDC positive input 11 = CIN5 connected to BIAS (connect unused CINx inputs)
[13:12]	X	R/W	CIN6_CONNECTION_SETUP	CIN6 connection setup 00 = CIN6 not connected to CDC inputs 01 = CIN6 connected to CDC negative input 10 = CIN6 connected to CDC positive input 11 = CIN6 connected to BIAS (connect unused CINx inputs)
[15:14]	X		Unused	Set to 0

Table 35. STAGEx_CONNECTION[12:7] Register Description (x = 0 to 11)

Data Bit	Default Value	Type	Name	Description
[1:0]	X	R/W	CIN7_CONNECTION_SETUP	CIN7 connection setup 00 = CIN7 not connected to CDC inputs 01 = CIN7 connected to CDC negative input 10 = CIN7 connected to CDC positive input 11 = CIN7 connected to BIAS (connect unused CINx inputs)
[3:2]	X	R/W	CIN8_CONNECTION_SETUP	CIN8 connection setup 00 = CIN8 not connected to CDC inputs 01 = CIN8 connected to CDC negative input 10 = CIN8 connected to CDC positive input 11 = CIN8 connected to BIAS (connect unused CINx inputs)
[5:4]	X	R/W	CIN9_CONNECTION_SETUP	CIN9 connection setup 00 = CIN9 not connected to CDC inputs 01 = CIN9 connected to CDC negative input 10 = CIN9 connected to CDC positive input 11 = CIN9 connected to BIAS (connect unused CINx inputs)
[7:6]	X	R/W	CIN10_CONNECTION_SETUP	CIN10 connection setup 00 = CIN10 not connected to CDC inputs 01 = CIN10 connected to CDC negative input 10 = CIN10 connected to CDC positive input 11 = CIN10 connected to BIAS (connect unused CINx inputs)
[9:8]	X	R/W	CIN11_CONNECTION_SETUP	CIN11 connection setup 00 = CIN11 not connected to CDC inputs 01 = CIN11 connected to CDC negative input 10 = CIN11 connected to CDC positive input 11 = CIN11 connected to BIAS (connect unused CINx inputs)
[11:10]	X	R/W	CIN12_CONNECTION_SETUP	CIN12 connection setup 00 = CIN12 not connected to CDC inputs 01 = CIN12 connected to CDC negative input 10 = CIN12 connected to CDC positive input 11 = CIN12 connected to BIAS (connect unused CINx inputs)
[13:12]	X	R/W	SE_CONNECTION_SETUP	Single-ended measurement connection setup 00 = do not use 01 = use when one CINx connected to CDC positive input, single-ended measurements only 10 = use when one CINx connected to CDC negative input, single-ended measurements only 11 = differential connection to CDC
[14]	X	R/W	NEG_AFE_OFFSET_DISABLE	Negative AFE offset enable control 0 = enable 1 = disable
[15]	X	R/W	POS_AFE_OFFSET_DISABLE	Positive AFE offset enable control 0 = enable 1 = disable

Table 36. STAGEx_AFE_OFFSET Register Description (x = 0 to 11)

Data Bit	Default Value	Type	Name	Description
[5:0]	X	R/W	NEG_AFE_OFFSET	Negative AFE offset setting (20 pF range) 1 LSB value = 0.32 pF of offset
[6]	X		Unused	Set to 0
[7]	X	R/W	NEG_AFE_OFFSET_SWAP	Negative AFE offset swap control 0 = NEG_AFE_OFFSET applied to CDC negative input 1 = NEG_AFE_OFFSET applied to CDC positive input
[13:8]	X	R/W	POS_AFE_OFFSET	Positive AFE offset setting (20 pF range) 1 LSB value = 0.32 pF of offset
[14]	X		Unused	Set to 0
[15]	X	R/W	POS_AFE_OFFSET_SWAP	Positive AFE offset swap control 0 = POS_AFE_OFFSET applied to CDC positive input 1 = POS_AFE_OFFSET applied to CDC negative input

Table 37. STAGEx_SENSITIVITY Register Description (x = 0 to 11)

Data Bit	Default Value	Type	Name	Description
[3:0]	X	R/W	NEG_THRESHOLD_SENSITIVITY	Negative threshold sensitivity control 0000 = 25%, 0001 = 29.73%, 0010 = 34.40%, 0011 = 39.08% 0100 = 43.79%, 0101 = 48.47%, 0110 = 53.15% 0111 = 57.83%, 1000 = 62.51%, 1001 = 67.22% 1010 = 71.90%, 1011 = 76.58%, 1100 = 81.28% 1101 = 85.96%, 1110 = 90.64%, 1111 = 95.32%
[6:4]	X	R/W	NEG_PEAK_DETECT	Negative peak detect setting 000 = 40% level, 001 = 50% level, 010 = 60% level 011 = 70% level, 100 = 80% level, 101 = 90% level
[7]	X	R/W	Unused	Set to 0
[11:8]	X	R/W	POS_THRESHOLD_SENSITIVITY	Positive threshold sensitivity control 0000 = 25%, 0001 = 29.73%, 0010 = 34.40%, 0011 = 39.08% 0100 = 43.79%, 0101 = 48.47%, 0110 = 53.15% 0111 = 57.83%, 1000 = 62.51%, 1001 = 67.22% 1010 = 71.90%, 1011 = 76.58%, 1100 = 81.28% 1101 = 85.96%, 1110 = 90.64%, 1111 = 95.32%
[14:12]	X	R/W	POS_PEAK_DETECT	Positive peak detect setting 000 = 40% level, 001 = 50% level, 010 = 60% level 011 = 70% level, 100 = 80% level, 101 = 90% level
[15]	X	R/W	Unused	Set to 0

Table 38. STAGE0 to STAGE11 Configuration Registers

Address	Data Bit	Default	Type	Name	Description
0x080	[15:0]	X	R/W	STAGE0_CONNECTION[6:0]	STAGE0 CIN[6:0] connection setup (see Table 34)
0x081	[15:0]	X	R/W	STAGE0_CONNECTION[12:7]	STAGE0 CIN[12:7] connection setup (see Table 35)
0x082	[15:0]	X	R/W	STAGE0_AFE_OFFSET	STAGE0 AFE offset control (see Table 36)
0x083	[15:0]	X	R/W	STAGE0_SENSITIVITY	STAGE0 sensitivity control (see Table 37)
0x084	[15:0]	X	R/W	STAGE0_OFFSET_LOW	STAGE0 initial offset low value
0x085	[15:0]	X	R/W	STAGE0_OFFSET_HIGH	STAGE0 initial offset high value
0x086	[15:0]	X	R/W	STAGE0_OFFSET_HIGH_CLAMP	STAGE0 offset high clamp value
0x087	[15:0]	X	R/W	STAGE0_OFFSET_LOW_CLAMP	STAGE0 offset low clamp value
0x088	[15:0]	X	R/W	STAGE1_CONNECTION[6:0]	STAGE1 CIN[6:0] connection setup (see Table 34)
0x089	[15:0]	X	R/W	STAGE1_CONNECTION[12:7]	STAGE1 CIN[12:7] connection setup (see Table 35)
0x08A	[15:0]	X	R/W	STAGE1_AFE_OFFSET	STAGE1 AFE offset control (see Table 36)
0x08B	[15:0]	X	R/W	STAGE1_SENSITIVITY	STAGE1 sensitivity control (see Table 37)
0x08C	[15:0]	X	R/W	STAGE1_OFFSET_LOW	STAGE1 initial offset low value
0x08D	[15:0]	X	R/W	STAGE1_OFFSET_HIGH	STAGE1 initial offset high value
0x08E	[15:0]	X	R/W	STAGE1_OFFSET_HIGH_CLAMP	STAGE1 offset high clamp value
0x08F	[15:0]	X	R/W	STAGE1_OFFSET_LOW_CLAMP	STAGE1 offset low clamp value
0x090	[15:0]	X	R/W	STAGE2_CONNECTION[6:0]	STAGE2 CIN[6:0] connection setup (see Table 34)
0x091	[15:0]	X	R/W	STAGE2_CONNECTION[12:7]	STAGE2 CIN[12:7] connection setup (see Table 35)
0x092	[15:0]	X	R/W	STAGE2_AFE_OFFSET	STAGE2 AFE offset control (see Table 36)
0x093	[15:0]	X	R/W	STAGE2_SENSITIVITY	STAGE2 sensitivity control (see Table 37)
0x094	[15:0]	X	R/W	STAGE2_OFFSET_LOW	STAGE2 initial offset low value
0x095	[15:0]	X	R/W	STAGE2_OFFSET_HIGH	STAGE2 initial offset high value
0x096	[15:0]	X	R/W	STAGE2_OFFSET_HIGH_CLAMP	STAGE2 offset high clamp value
0x097	[15:0]	X	R/W	STAGE2_OFFSET_LOW_CLAMP	STAGE2 offset low clamp value
0x098	[15:0]	X	R/W	STAGE3_CONNECTION[6:0]	STAGE3 CIN[6:0] connection setup (see Table 34)
0x099	[15:0]	X	R/W	STAGE3_CONNECTION[12:7]	STAGE3 CIN[12:7] connection setup (see Table 35)
0x09A	[15:0]	X	R/W	STAGE3_AFE_OFFSET	STAGE3 AFE offset control (see Table 36)
0x09B	[15:0]	X	R/W	STAGE3_SENSITIVITY	STAGE3 sensitivity control (see Table 37)
0x09C	[15:0]	X	R/W	STAGE3_OFFSET_LOW	STAGE3 initial offset low value
0x09D	[15:0]	X	R/W	STAGE3_OFFSET_HIGH	STAGE3 initial offset high value
0x09E	[15:0]	X	R/W	STAGE3_OFFSET_HIGH_CLAMP	STAGE3 offset high clamp value
0x09F	[15:0]	X	R/W	STAGE3_OFFSET_LOW_CLAMP	STAGE3 offset low clamp value
0x0A0	[15:0]	X	R/W	STAGE4_CONNECTION[6:0]	STAGE4 CIN[6:0] connection setup (see Table 34)
0x0A1	[15:0]	X	R/W	STAGE4_CONNECTION[12:7]	STAGE4 CIN[12:7] connection setup (see Table 35)
0x0A2	[15:0]	X	R/W	STAGE4_AFE_OFFSET	STAGE4 AFE offset control (see Table 36)
0x0A3	[15:0]	X	R/W	STAGE4_SENSITIVITY	STAGE4 sensitivity control (see Table 37)
0x0A4	[15:0]	X	R/W	STAGE4_OFFSET_LOW	STAGE4 initial offset low value
0x0A5	[15:0]	X	R/W	STAGE4_OFFSET_HIGH	STAGE4 initial offset high value
0x0A6	[15:0]	X	R/W	STAGE4_OFFSET_HIGH_CLAMP	STAGE4 offset high clamp value
0x0A7	[15:0]	X	R/W	STAGE4_OFFSET_LOW_CLAMP	STAGE4 offset low clamp value
0x0A8	[15:0]	X	R/W	STAGE5_CONNECTION[6:0]	STAGE5 CIN[6:0] connection setup (see Table 34)
0x0A9	[15:0]	X	R/W	STAGE5_CONNECTION[12:7]	STAGE5 CIN[12:7] connection setup (see Table 35)
0x0AA	[15:0]	X	R/W	STAGE5_AFE_OFFSET	STAGE5 AFE offset control (see Table 36)
0x0AB	[15:0]	X	R/W	STAGE5_SENSITIVITY	STAGE5 sensitivity control (see Table 37)
0x0AC	[15:0]	X	R/W	STAGE5_OFFSET_LOW	STAGE5 initial offset low value
0x0AD	[15:0]	X	R/W	STAGE5_OFFSET_HIGH	STAGE5 initial offset high value
0x0AE	[15:0]	X	R/W	STAGE5_OFFSET_HIGH_CLAMP	STAGE5 offset high clamp value
0x0AF	[15:0]	X	R/W	STAGE5_OFFSET_LOW_CLAMP	STAGE5 offset low clamp value

Address	Data Bit	Default	Type	Name	Description
0x0B0	[15:0]	X	R/W	STAGE6_CONNECTION[6:0]	STAGE6 CIN[6:0] connection setup (see Table 34)
0x0B1	[15:0]	X	R/W	STAGE6_CONNECTION[12:7]	STAGE6 CIN[12:7]connection setup (see Table 35)
0x0B2	[15:0]	X	R/W	STAGE6_AFE_OFFSET	STAGE6 AFE offset control (see Table 36)
0x0B3	[15:0]	X	R/W	STAGE6_SENSITIVITY	STAGE6 sensitivity control (see Table 37)
0x0B4	[15:0]	X	R/W	STAGE6_OFFSET_LOW	STAGE6 initial offset low value
0x0B5	[15:0]	X	R/W	STAGE6_OFFSET_HIGH	STAGE6 initial offset high value
0x0B6	[15:0]	X	R/W	STAGE6_OFFSET_HIGH_CLAMP	STAGE6 offset high clamp value
0x0B7	[15:0]	X	R/W	STAGE6_OFFSET_LOW_CLAMP	STAGE6 offset low clamp value
0x0B8	[15:0]	X	R/W	STAGE7_CONNECTION[6:0]	STAGE7 CIN[6:0] connection setup (see Table 34)
0x0B9	[15:0]	X	R/W	STAGE7_CONNECTION[12:7]	STAGE7 CIN[12:7] connection setup (see Table 35)
0x0BA	[15:0]	X	R/W	STAGE7_AFE_OFFSET	STAGE7 AFE offset control (see Table 36)
0x0BB	[15:0]	X	R/W	STAGE7_SENSITIVITY	STAGE7 sensitivity control (see Table 37)
0x0BC	[15:0]	X	R/W	STAGE7_OFFSET_LOW	STAGE7 initial offset low value
0x0BD	[15:0]	X	R/W	STAGE7_OFFSET_HIGH	STAGE7 initial offset high value
0x0BE	[15:0]	X	R/W	STAGE7_OFFSET_HIGH_CLAMP	STAGE7 offset high clamp value
0x0BF	[15:0]	X	R/W	STAGE7_OFFSET_LOW_CLAMP	STAGE7 offset low clamp value
0x0C0	[15:0]	X	R/W	STAGE8_CONNECTION[6:0]	STAGE8 CIN[6:0] connection setup (see Table 34)
0x0C1	[15:0]	X	R/W	STAGE8_CONNECTION[12:7]	STAGE8 CIN[12:7]connection setup (see Table 35)
0x0C2	[15:0]	X	R/W	STAGE8_AFE_OFFSET	STAGE8 AFE offset control (see Table 36)
0x0C3	[15:0]	X	R/W	STAGE8_SENSITIVITY	STAGE8 sensitivity control (see Table 37)
0x0C4	[15:0]	X	R/W	STAGE8_OFFSET_LOW	STAGE8 initial offset low value
0x0C5	[15:0]	X	R/W	STAGE8_OFFSET_HIGH	STAGE8 initial offset high value
0x0C6	[15:0]	X	R/W	STAGE8_OFFSET_HIGH_CLAMP	STAGE8 offset high clamp value
0x0C7	[15:0]	X	R/W	STAGE8_OFFSET_LOW_CLAMP	STAGE8 offset low clamp value
0x0C8	[15:0]	X	R/W	STAGE9_CONNECTION[6:0]	STAGE9 CIN[6:0] connection setup (see Table 34)
0x0C9	[15:0]	X	R/W	STAGE9_CONNECTION[12:7]	STAGE9 CIN[12:7]connection setup (see Table 35)
0x0CA	[15:0]	X	R/W	STAGE9_AFE_OFFSET	STAGE9 AFE offset control (see Table 36)
0x0CB	[15:0]	X	R/W	STAGE9_SENSITIVITY	STAGE9 sensitivity control (see Table 37)
0x0CC	[15:0]	X	R/W	STAGE9_OFFSET_LOW	STAGE9 initial offset low value
0x0CD	[15:0]	X	R/W	STAGE9_OFFSET_HIGH	STAGE9 initial offset high value
0x0CE	[15:0]	X	R/W	STAGE9_OFFSET_HIGH_CLAMP	STAGE9 offset high clamp value
0x0CF	[15:0]	X	R/W	STAGE9_OFFSET_LOW_CLAMP	STAGE9 offset low clamp value
0x0D0	[15:0]	X	R/W	STAGE10_CONNECTION[6:0]	STAGE10 CIN[6:0] connection setup (see Table 34)
0x0D1	[15:0]	X	R/W	STAGE10_CONNECTION[12:7]	STAGE10 CIN[12:7]connection setup (see Table 35)
0x0D2	[15:0]	X	R/W	STAGE10_AFE_OFFSET	STAGE10 AFE offset control (see Table 36)
0x0D3	[15:0]	X	R/W	STAGE10_SENSITIVITY	STAGE10 sensitivity control (see Table 37)
0x0D4	[15:0]	X	R/W	STAGE10_OFFSET_LOW	STAGE10 initial offset low value
0x0D5	[15:0]	X	R/W	STAGE10_OFFSET_HIGH	STAGE10 initial offset high value
0x0D6	[15:0]	X	R/W	STAGE10_OFFSET_HIGH_CLAMP	STAGE10 offset high clamp value
0x0D7	[15:0]	X	R/W	STAGE10_OFFSET_LOW_CLAMP	STAGE10 offset low clamp value
0x0D8	[15:0]	X	R/W	STAGE11_CONNECTION[6:0]	STAGE11 CIN[6:0] connection setup (see Table 34)
0x0D9	[15:0]	X	R/W	STAGE11_CONNECTION[12:7]	STAGE11 CIN[12:7] connection setup (see Table 35)
0x0DA	[15:0]	X	R/W	STAGE11_AFE_OFFSET	STAGE11 AFE offset control (see Table 36)
0x0DB	[15:0]	X	R/W	STAGE11_SENSITIVITY	STAGE11 sensitivity control (see Table 37)
0x0DC	[15:0]	X	R/W	STAGE11_OFFSET_LOW	STAGE11 initial offset low value
0x0DD	[15:0]	X	R/W	STAGE11_OFFSET_HIGH	STAGE11 initial offset high value
0x0DE	[15:0]	X	R/W	STAGE11_OFFSET_HIGH_CLAMP	STAGE11 offset high clamp value
0x0DF	[15:0]	X	R/W	STAGE11_OFFSET_LOW_CLAMP	STAGE11 offset low clamp value

BANK 3 REGISTERS

All address values are expressed in hexadecimal.

Table 39. STAGE0 Results Registers

Address	Data Bit	Default Value	Type	Name	Description
0x0E0	[15:0]	X	R/W	STAGE0_CONV_DATA	STAGE0 CDC 16-bit conversion data (copy of CDC_RESULT_S0 register)
0x0E1	[15:0]	X	R/W	STAGE0_FF_WORD0	STAGE0 fast FIFO WORD0
0x0E2	[15:0]	X	R/W	STAGE0_FF_WORD1	STAGE0 fast FIFO WORD1
0x0E3	[15:0]	X	R/W	STAGE0_FF_WORD2	STAGE0 fast FIFO WORD2
0x0E4	[15:0]	X	R/W	STAGE0_FF_WORD3	STAGE0 fast FIFO WORD3
0x0E5	[15:0]	X	R/W	STAGE0_FF_WORD4	STAGE0 fast FIFO WORD4
0x0E6	[15:0]	X	R/W	STAGE0_FF_WORD5	STAGE0 fast FIFO WORD5
0x0E7	[15:0]	X	R/W	STAGE0_FF_WORD6	STAGE0 fast FIFO WORD6
0x0E8	[15:0]	X	R/W	STAGE0_FF_WORD7	STAGE0 fast FIFO WORD7
0x0E9	[15:0]	X	R/W	STAGE0_SF_WORD0	STAGE0 slow FIFO WORD0
0x0EA	[15:0]	X	R/W	STAGE0_SF_WORD1	STAGE0 slow FIFO WORD1
0x0EB	[15:0]	X	R/W	STAGE0_SF_WORD2	STAGE0 slow FIFO WORD2
0x0EC	[15:0]	X	R/W	STAGE0_SF_WORD3	STAGE0 slow FIFO WORD3
0x0ED	[15:0]	X	R/W	STAGE0_SF_WORD4	STAGE0 slow FIFO WORD4
0x0EE	[15:0]	X	R/W	STAGE0_SF_WORD5	STAGE0 slow FIFO WORD5
0x0EF	[15:0]	X	R/W	STAGE0_SF_WORD6	STAGE0 slow FIFO WORD6
0x0F0	[15:0]	X	R/W	STAGE0_SF_WORD7	STAGE0 slow FIFO WORD7
0x0F1	[15:0]	X	R/W	STAGE0_SF_AMBIENT	STAGE0 slow FIFO ambient value
0x0F2	[15:0]	X	R/W	STAGE0_FF_AVG	STAGE0 fast FIFO average value
0x0F3	[15:0]	X	R/W	STAGE0_PEAK_DETECT_WORD0	STAGE0 peak FIFO WORD0 value
0x0F4	[15:0]	X	R/W	STAGE0_PEAK_DETECT_WORD1	STAGE0 peak FIFO WORD1 value
0x0F5	[15:0]	X	R/W	STAGE0_MAX_WORD0	STAGE0 maximum value FIFO WORD0
0x0F6	[15:0]	X	R/W	STAGE0_MAX_WORD1	STAGE0 maximum value FIFO WORD1
0x0F7	[15:0]	X	R/W	STAGE0_MAX_WORD2	STAGE0 maximum value FIFO WORD2
0x0F8	[15:0]	X	R/W	STAGE0_MAX_WORD3	STAGE0 maximum value FIFO WORD3
0x0F9	[15:0]	X	R/W	STAGE0_MAX_AVG	STAGE0 average maximum FIFO value
0x0FA	[15:0]	X	R/W	STAGE0_HIGH_THRESHOLD	STAGE0 high threshold value
0x0FB	[15:0]	X	R/W	STAGE0_MAX_TEMP	STAGE0 temporary maximum value
0x0FC	[15:0]	X	R/W	STAGE0_MIN_WORD0	STAGE0 minimum value FIFO WORD0
0x0FD	[15:0]	X	R/W	STAGE0_MIN_WORD1	STAGE0 minimum value FIFO WORD1
0x0FE	[15:0]	X	R/W	STAGE0_MIN_WORD2	STAGE0 minimum value FIFO WORD2
0x0FF	[15:0]	X	R/W	STAGE0_MIN_WORD3	STAGE0 minimum value FIFO WORD3
0x100	[15:0]	X	R/W	STAGE0_MIN_AVG	STAGE0 average minimum FIFO value
0x101	[15:0]	X	R/W	STAGE0_LOW_THRESHOLD	STAGE0 low threshold value
0x102	[15:0]	X	R/W	STAGE0_MIN_TEMP	STAGE0 temporary minimum value
0x103	[15:0]	X	R/W	Unused	Set to 0

Table 40. STAGE1 Results Registers

Address	Data Bit	Default Value	Type	Name	Description
0x104	[15:0]	X	R/W	STAGE1_CONV_DATA	STAGE1 CDC 16-bit conversion data (copy of CDC_RESULT_S1 register
0x105	[15:0]	X	R/W	STAGE1_FF_WORD0	STAGE1 fast FIFO WORD0
0x106	[15:0]	X	R/W	STAGE1_FF_WORD1	STAGE1 fast FIFO WORD1
0x107	[15:0]	X	R/W	STAGE1_FF_WORD2	STAGE1 fast FIFO WORD2
0x108	[15:0]	X	R/W	STAGE1_FF_WORD3	STAGE1 fast FIFO WORD3
0x109	[15:0]	X	R/W	STAGE1_FF_WORD4	STAGE1 fast FIFO WORD4
0x10A	[15:0]	X	R/W	STAGE1_FF_WORD5	STAGE1 fast FIFO WORD5
0x10B	[15:0]	X	R/W	STAGE1_FF_WORD6	STAGE1 fast FIFO WORD6
0x10C	[15:0]	X	R/W	STAGE1_FF_WORD7	STAGE1 fast FIFO WORD7
0x10D	[15:0]	X	R/W	STAGE1_SF_WORD0	STAGE1 slow FIFO WORD0
0x10E	[15:0]	X	R/W	STAGE1_SF_WORD1	STAGE1 slow FIFO WORD1
0x10F	[15:0]	X	R/W	STAGE1_SF_WORD2	STAGE1 slow FIFO WORD2
0x110	[15:0]	X	R/W	STAGE1_SF_WORD3	STAGE1 slow FIFO WORD3
0x111	[15:0]	X	R/W	STAGE1_SF_WORD4	STAGE1 slow FIFO WORD4
0x112	[15:0]	X	R/W	STAGE1_SF_WORD5	STAGE1 slow FIFO WORD5
0x113	[15:0]	X	R/W	STAGE1_SF_WORD6	STAGE1 slow FIFO WORD6
0x114	[15:0]	X	R/W	STAGE1_SF_WORD7	STAGE1 slow FIFO WORD7
0x115	[15:0]	X	R/W	STAGE1_SF_AMBIENT	STAGE1 slow FIFO ambient value
0x116	[15:0]	X	R/W	STAGE1_FF_AVG	STAGE1 fast FIFO average value
0x117	[15:0]	X	R/W	STAGE1_PEAK_DETECT_WORD0	STAGE1 peak FIFO WORD0 value
0x118	[15:0]	X	R/W	STAGE1_PEAK_DETECT_WORD1	STAGE1 peak FIFO WORD1 value
0x119	[15:0]	X	R/W	STAGE1_MAX_WORD0	STAGE1 maximum value FIFO WORD0
0x11A	[15:0]	X	R/W	STAGE1_MAX_WORD1	STAGE1 maximum value FIFO WORD1
0x11B	[15:0]	X	R/W	STAGE1_MAX_WORD2	STAGE1 maximum value FIFO WORD2
0x11C	[15:0]	X	R/W	STAGE1_MAX_WORD3	STAGE1 maximum value FIFO WORD3
0x11D	[15:0]	X	R/W	STAGE1_MAX_AVG	STAGE1 average maximum FIFO value
0x11E	[15:0]	X	R/W	STAGE1_HIGH_THRESHOLD	STAGE1 high threshold value
0x11F	[15:0]	X	R/W	STAGE1_MAX_TEMP	STAGE1 temporary maximum value
0x120	[15:0]	X	R/W	STAGE1_MIN_WORD0	STAGE1 minimum value FIFO WORD0
0x121	[15:0]	X	R/W	STAGE1_MIN_WORD1	STAGE1 minimum value FIFO WORD1
0x122	[15:0]	X	R/W	STAGE1_MIN_WORD2	STAGE1 minimum value FIFO WORD2
0x123	[15:0]	X	R/W	STAGE1_MIN_WORD3	STAGE1 minimum value FIFO WORD3
0x124	[15:0]	X	R/W	STAGE1_MIN_AVG	STAGE1 average minimum FIFO value
0x125	[15:0]	X	R/W	STAGE1_LOW_THRESHOLD	STAGE1 low threshold value
0x126	[15:0]	X	R/W	STAGE1_MIN_TEMP	STAGE1 temporary minimum value
0x127	[15:0]	X	R/W	Unused	Set to 0

Table 41. STAGE2 Results Registers

Address	Data Bit	Default Value	Type	Name	Description
0x128	[15:0]	X	R/W	STAGE2_CONV_DATA	STAGE2 CDC 16-bit conversion data (copy of CDC_RESULT_S2 register)
0x129	[15:0]	X	R/W	STAGE2_FF_WORD0	STAGE2 fast FIFO WORD0
0x12A	[15:0]	X	R/W	STAGE2_FF_WORD1	STAGE2 fast FIFO WORD1
0x12B	[15:0]	X	R/W	STAGE2_FF_WORD2	STAGE2 fast FIFO WORD2
0x12C	[15:0]	X	R/W	STAGE2_FF_WORD3	STAGE2 fast FIFO WORD3
0x12D	[15:0]	X	R/W	STAGE2_FF_WORD4	STAGE2 fast FIFO WORD4
0x12E	[15:0]	X	R/W	STAGE2_FF_WORD5	STAGE2 fast FIFO WORD5
0x12F	[15:0]	X	R/W	STAGE2_FF_WORD6	STAGE2 fast FIFO WORD6
0x130	[15:0]	X	R/W	STAGE2_FF_WORD7	STAGE2 fast FIFO WORD7
0x131	[15:0]	X	R/W	STAGE2_SF_WORD0	STAGE2 slow FIFO WORD0
0x132	[15:0]	X	R/W	STAGE2_SF_WORD1	STAGE2 slow FIFO WORD1
0x133	[15:0]	X	R/W	STAGE2_SF_WORD2	STAGE2 slow FIFO WORD2
0x134	[15:0]	X	R/W	STAGE2_SF_WORD3	STAGE2 slow FIFO WORD3
0x135	[15:0]	X	R/W	STAGE2_SF_WORD4	STAGE2 slow FIFO WORD4
0x136	[15:0]	X	R/W	STAGE2_SF_WORD5	STAGE2 slow FIFO WORD5
0x137	[15:0]	X	R/W	STAGE2_SF_WORD6	STAGE2 slow FIFO WORD6
0x138	[15:0]	X	R/W	STAGE2_SF_WORD7	STAGE2 slow FIFO WORD7
0x139	[15:0]	X	R/W	STAGE2_SF_AMBIENT	STAGE2 slow FIFO ambient value
0x13A	[15:0]	X	R/W	STAGE2_FF_AVG	STAGE2 fast FIFO average value
0x13B	[15:0]	X	R/W	STAGE2_PEAK_DETECT_WORD0	STAGE2 peak FIFO WORD0 value
0x13C	[15:0]	X	R/W	STAGE2_PEAK_DETECT_WORD1	STAGE2 peak FIFO WORD1 value
0x13D	[15:0]	X	R/W	STAGE2_MAX_WORD0	STAGE2 maximum value FIFO WORD0
0x13E	[15:0]	X	R/W	STAGE2_MAX_WORD1	STAGE2 maximum value FIFO WORD1
0x13F	[15:0]	X	R/W	STAGE2_MAX_WORD2	STAGE2 maximum value FIFO WORD2
0x140	[15:0]	X	R/W	STAGE2_MAX_WORD3	STAGE2 maximum value FIFO WORD3
0x141	[15:0]	X	R/W	STAGE2_MAX_AVG	STAGE2 average maximum FIFO value
0x142	[15:0]	X	R/W	STAGE2_HIGH_THRESHOLD	STAGE2 high threshold value
0x143	[15:0]	X	R/W	STAGE2_MAX_TEMP	STAGE2 temporary maximum value
0x144	[15:0]	X	R/W	STAGE2_MIN_WORD0	STAGE2 minimum value FIFO WORD0
0x145	[15:0]	X	R/W	STAGE2_MIN_WORD1	STAGE2 minimum value FIFO WORD1
0x146	[15:0]	X	R/W	STAGE2_MIN_WORD2	STAGE2 minimum value FIFO WORD2
0x147	[15:0]	X	R/W	STAGE2_MIN_WORD3	STAGE2 minimum value FIFO WORD3
0x148	[15:0]	X	R/W	STAGE2_MIN_AVG	STAGE2 average minimum FIFO value
0x149	[15:0]	X	R/W	STAGE2_LOW_THRESHOLD	STAGE2 low threshold value
0x14A	[15:0]	X	R/W	STAGE2_MIN_TEMP	STAGE2 temporary minimum value
0x14B	[15:0]	X	R/W	Unused	Set to 0

Table 42. STAGE3 Results Registers

Address	Data Bit	Default Value	Type	Name	Description
0x14C	[15:0]	X	R/W	STAGE3_CONV_DATA	STAGE3 CDC 16-bit conversion data (copy of CDC_RESULT_S3 register)
0x14D	[15:0]	X	R/W	STAGE3_FF_WORD0	STAGE3 fast FIFO WORD0
0x14E	[15:0]	X	R/W	STAGE3_FF_WORD1	STAGE3 fast FIFO WORD1
0x14F	[15:0]	X	R/W	STAGE3_FF_WORD2	STAGE3 fast FIFO WORD2
0x150	[15:0]	X	R/W	STAGE3_FF_WORD3	STAGE3 fast FIFO WORD3
0x151	[15:0]	X	R/W	STAGE3_FF_WORD4	STAGE3 fast FIFO WORD4
0x152	[15:0]	X	R/W	STAGE3_FF_WORD5	STAGE3 fast FIFO WORD5
0x153	[15:0]	X	R/W	STAGE3_FF_WORD6	STAGE3 fast FIFO WORD6
0x154	[15:0]	X	R/W	STAGE3_FF_WORD7	STAGE3 fast FIFO WORD7
0x155	[15:0]	X	R/W	STAGE3_SF_WORD0	STAGE3 slow FIFO WORD0
0x156	[15:0]	X	R/W	STAGE3_SF_WORD1	STAGE3 slow FIFO WORD1
0x157	[15:0]	X	R/W	STAGE3_SF_WORD2	STAGE3 slow FIFO WORD2
0x158	[15:0]	X	R/W	STAGE3_SF_WORD3	STAGE3 slow FIFO WORD3
0x159	[15:0]	X	R/W	STAGE3_SF_WORD4	STAGE3 slow FIFO WORD4
0x15A	[15:0]	X	R/W	STAGE3_SF_WORD5	STAGE3 slow FIFO WORD5
0x15B	[15:0]	X	R/W	STAGE3_SF_WORD6	STAGE3 slow FIFO WORD6
0x15C	[15:0]	X	R/W	STAGE3_SF_WORD7	STAGE3 slow FIFO WORD7
0x15D	[15:0]	X	R/W	STAGE3_SF_AMBIENT	STAGE3 slow FIFO ambient value
0x15E	[15:0]	X	R/W	STAGE3_FF_AVG	STAGE3 fast FIFO average value
0x15F	[15:0]	X	R/W	STAGE3_PEAK_DETECT_WORD0	STAGE3 peak FIFO WORD0 value
0x160	[15:0]	X	R/W	STAGE3_PEAK_DETECT_WORD1	STAGE3 peak FIFO WORD1 value
0x161	[15:0]	X	R/W	STAGE3_MAX_WORD0	STAGE3 maximum value FIFO WORD0
0x162	[15:0]	X	R/W	STAGE3_MAX_WORD1	STAGE3 maximum value FIFO WORD1
0x163	[15:0]	X	R/W	STAGE3_MAX_WORD2	STAGE3 maximum value FIFO WORD2
0x164	[15:0]	X	R/W	STAGE3_MAX_WORD3	STAGE3 maximum value FIFO WORD3
0x165	[15:0]	X	R/W	STAGE3_MAX_AVG	STAGE3 average maximum FIFO value
0x166	[15:0]	X	R/W	STAGE3_HIGH_THRESHOLD	STAGE3 high threshold value
0x167	[15:0]	X	R/W	STAGE3_MAX_TEMP	STAGE3 temporary maximum value
0x168	[15:0]	X	R/W	STAGE3_MIN_WORD0	STAGE3 minimum value FIFO WORD0
0x169	[15:0]	X	R/W	STAGE3_MIN_WORD1	STAGE3 minimum value FIFO WORD1
0x16A	[15:0]	X	R/W	STAGE3_MIN_WORD2	STAGE3 minimum value FIFO WORD2
0x16B	[15:0]	X	R/W	STAGE3_MIN_WORD3	STAGE3 minimum value FIFO WORD3
0x16C	[15:0]	X	R/W	STAGE3_MIN_AVG	STAGE3 average minimum FIFO value
0x16D	[15:0]	X	R/W	STAGE3_LOW_THRESHOLD	STAGE3 low threshold value
0x16E	[15:0]	X	R/W	STAGE3_MIN_TEMP	STAGE3 temporary minimum value
0x16F	[15:0]	X	R/W	Unused	Set to 0

Table 43. STAGE4 Results Registers

Address	Data Bit	Default Value	Type	Name	Description
0x170	[15:0]	X	R/W	STAGE4_CONV_DATA	STAGE4 CDC 16-bit conversion data (copy of CDC_RESULT_S4 register)
0x171	[15:0]	X	R/W	STAGE4_FF_WORD0	STAGE4 fast FIFO WORD0
0x172	[15:0]	X	R/W	STAGE4_FF_WORD1	STAGE4 fast FIFO WORD1
0x173	[15:0]	X	R/W	STAGE4_FF_WORD2	STAGE4 fast FIFO WORD2
0x174	[15:0]	X	R/W	STAGE4_FF_WORD3	STAGE4 fast FIFO WORD3
0x175	[15:0]	X	R/W	STAGE4_FF_WORD4	STAGE4 fast FIFO WORD4
0x176	[15:0]	X	R/W	STAGE4_FF_WORD5	STAGE4 fast FIFO WORD5
0x177	[15:0]	X	R/W	STAGE4_FF_WORD6	STAGE4 fast FIFO WORD6
0x178	[15:0]	X	R/W	STAGE4_FF_WORD7	STAGE4 fast FIFO WORD7
0x179	[15:0]	X	R/W	STAGE4_SF_WORD0	STAGE4 slow FIFO WORD0
0x17A	[15:0]	X	R/W	STAGE4_SF_WORD1	STAGE4 slow FIFO WORD1
0x17B	[15:0]	X	R/W	STAGE4_SF_WORD2	STAGE4 slow FIFO WORD2
0x17C	[15:0]	X	R/W	STAGE4_SF_WORD3	STAGE4 slow FIFO WORD3
0x17D	[15:0]	X	R/W	STAGE4_SF_WORD4	STAGE4 slow FIFO WORD4
0x17E	[15:0]	X	R/W	STAGE4_SF_WORD5	STAGE4 slow FIFO WORD5
0x17F	[15:0]	X	R/W	STAGE4_SF_WORD6	STAGE4 slow FIFO WORD6
0x180	[15:0]	X	R/W	STAGE4_SF_WORD7	STAGE4 slow FIFO WORD7
0x181	[15:0]	X	R/W	STAGE4_SF_AMBIENT	STAGE4 slow FIFO ambient value
0x182	[15:0]	X	R/W	STAGE4_FF_AVG	STAGE4 fast FIFO average value
0x183	[15:0]	X	R/W	STAGE4_PEAK_DETECT_WORD0	STAGE4 peak FIFO WORD0 value
0x184	[15:0]	X	R/W	STAGE4_PEAK_DETECT_WORD1	STAGE4 peak FIFO WORD1 value
0x185	[15:0]	X	R/W	STAGE4_MAX_WORD0	STAGE4 maximum value FIFO WORD0
0x186	[15:0]	X	R/W	STAGE4_MAX_WORD1	STAGE4 maximum value FIFO WORD1
0x187	[15:0]	X	R/W	STAGE4_MAX_WORD2	STAGE4 maximum value FIFO WORD2
0x188	[15:0]	X	R/W	STAGE4_MAX_WORD3	STAGE4 maximum value FIFO WORD3
0x189	[15:0]	X	R/W	STAGE4_MAX_AVG	STAGE4 average maximum FIFO value
0x18A	[15:0]	X	R/W	STAGE4_HIGH_THRESHOLD	STAGE4 high threshold value
0x18B	[15:0]	X	R/W	STAGE4_MAX_TEMP	STAGE4 temporary maximum value
0x18C	[15:0]	X	R/W	STAGE4_MIN_WORD0	STAGE4 minimum value FIFO WORD0
0x18D	[15:0]	X	R/W	STAGE4_MIN_WORD1	STAGE4 minimum value FIFO WORD1
0x18E	[15:0]	X	R/W	STAGE4_MIN_WORD2	STAGE4 minimum value FIFO WORD2
0x18F	[15:0]	X	R/W	STAGE4_MIN_WORD3	STAGE4 minimum value FIFO WORD3
0x190	[15:0]	X	R/W	STAGE4_MIN_AVG	STAGE4 average minimum FIFO value
0x191	[15:0]	X	R/W	STAGE4_LOW_THRESHOLD	STAGE4 low threshold value
0x192	[15:0]	X	R/W	STAGE4_MIN_TEMP	STAGE4 temporary minimum value
0x193	[15:0]	X	R/W	Unused	Set to 0

Table 44. STAGE5 Results Registers

Address	Data Bit	Default Value	Type	Name	Description
0x194	[15:0]	X	R/W	STAGE5_CONV_DATA	STAGE5 CDC 16-bit conversion data (copy of CDC_RESULT_S5 register)
0x195	[15:0]	X	R/W	STAGE5_FF_WORD0	STAGE5 fast FIFO WORD0
0x196	[15:0]	X	R/W	STAGE5_FF_WORD1	STAGE5 fast FIFO WORD1
0x197	[15:0]	X	R/W	STAGE5_FF_WORD2	STAGE5 fast FIFO WORD2
0x198	[15:0]	X	R/W	STAGE5_FF_WORD3	STAGE5 fast FIFO WORD3
0x199	[15:0]	X	R/W	STAGE5_FF_WORD4	STAGE5 fast FIFO WORD4
0x19A	[15:0]	X	R/W	STAGE5_FF_WORD5	STAGE5 fast FIFO WORD5
0x19B	[15:0]	X	R/W	STAGE5_FF_WORD6	STAGE5 fast FIFO WORD6
0x19C	[15:0]	X	R/W	STAGE5_FF_WORD7	STAGE5 fast FIFO WORD7
0x19D	[15:0]	X	R/W	STAGE5_SF_WORD0	STAGE5 slow FIFO WORD0
0x19E	[15:0]	X	R/W	STAGE5_SF_WORD1	STAGE5 slow FIFO WORD1
0x19F	[15:0]	X	R/W	STAGE5_SF_WORD2	STAGE5 slow FIFO WORD2
0x1A0	[15:0]	X	R/W	STAGE5_SF_WORD3	STAGE5 slow FIFO WORD3
0x1A1	[15:0]	X	R/W	STAGE5_SF_WORD4	STAGE5 slow FIFO WORD4
0x1A2	[15:0]	X	R/W	STAGE5_SF_WORD5	STAGE5 slow FIFO WORD5
0x1A3	[15:0]	X	R/W	STAGE5_SF_WORD6	STAGE5 slow FIFO WORD6
0x1A4	[15:0]	X	R/W	STAGE5_SF_WORD7	STAGE5 slow FIFO WORD7
0x1A5	[15:0]	X	R/W	STAGE5_SF_AMBIENT	STAGE5 slow FIFO ambient value
0x1A6	[15:0]	X	R/W	STAGE5_FF_AVG	STAGE5 fast FIFO average value
0x1A7	[15:0]	X	R/W	STAGE5_PEAK_DETECT_WORD0	STAGE5 peak FIFO WORD0 value
0x1A8	[15:0]	X	R/W	STAGE5_PEAK_DETECT_WORD1	STAGE5 peak FIFO WORD1 value
0x1A9	[15:0]	X	R/W	STAGE5_MAX_WORD0	STAGE5 maximum value FIFO WORD0
0x1AA	[15:0]	X	R/W	STAGE5_MAX_WORD1	STAGE5 maximum value FIFO WORD1
0x1AB	[15:0]	X	R/W	STAGE5_MAX_WORD2	STAGE5 maximum value FIFO WORD2
0x1AC	[15:0]	X	R/W	STAGE5_MAX_WORD3	STAGE5 maximum value FIFO WORD3
0x1AD	[15:0]	X	R/W	STAGE5_MAX_AVG	STAGE5 average maximum FIFO value
0x1AE	[15:0]	X	R/W	STAGE5_HIGH_THRESHOLD	STAGE5 high threshold value
0x1AF	[15:0]	X	R/W	STAGE5_MAX_TEMP	STAGE5 temporary maximum value
0x1B0	[15:0]	X	R/W	STAGE5_MIN_WORD0	STAGE5 minimum value FIFO WORD0
0x1B1	[15:0]	X	R/W	STAGE5_MIN_WORD1	STAGE5 minimum value FIFO WORD1
0x1B2	[15:0]	X	R/W	STAGE5_MIN_WORD2	STAGE5 minimum value FIFO WORD2
0x1B3	[15:0]	X	R/W	STAGE5_MIN_WORD3	STAGE5 minimum value FIFO WORD3
0x1B4	[15:0]	X	R/W	STAGE5_MIN_AVG	STAGE5 average minimum FIFO value
0x1B5	[15:0]	X	R/W	STAGE5_LOW_THRESHOLD	STAGE5 low threshold value
0x1B6	[15:0]	X	R/W	STAGE5_MIN_TEMP	STAGE5 temporary minimum value
0x1B7	[15:0]	X	R/W	Unused	Set to 0

Table 45. STAGE6 Results Registers

Address	Data Bit	Default Value	Type	Name	Description
0x1B8	[15:0]	X	R/W	STAGE6_CONV_DATA	STAGE6 CDC 16-bit conversion data (copy of CDC_RESULT_S6 register)
0x1B9	[15:0]	X	R/W	STAGE6_FF_WORD0	STAGE6 fast FIFO WORD0
0x1BA	[15:0]	X	R/W	STAGE6_FF_WORD1	STAGE6 fast FIFO WORD1
0x1BB	[15:0]	X	R/W	STAGE6_FF_WORD2	STAGE6 fast FIFO WORD2
0x1BC	[15:0]	X	R/W	STAGE6_FF_WORD3	STAGE6 fast FIFO WORD3
0x1BD	[15:0]	X	R/W	STAGE6_FF_WORD4	STAGE6 fast FIFO WORD4
0x1BE	[15:0]	X	R/W	STAGE6_FF_WORD5	STAGE6 fast FIFO WORD5
0x1BF	[15:0]	X	R/W	STAGE6_FF_WORD6	STAGE6 fast FIFO WORD6
0x1C0	[15:0]	X	R/W	STAGE6_FF_WORD7	STAGE6 fast FIFO WORD7
0x1C1	[15:0]	X	R/W	STAGE6_SF_WORD0	STAGE6 slow FIFO WORD0
0x1C2	[15:0]	X	R/W	STAGE6_SF_WORD1	STAGE6 slow FIFO WORD1
0x1C3	[15:0]	X	R/W	STAGE6_SF_WORD2	STAGE6 slow FIFO WORD2
0x1C4	[15:0]	X	R/W	STAGE6_SF_WORD3	STAGE6 slow FIFO WORD3
0x1C5	[15:0]	X	R/W	STAGE6_SF_WORD4	STAGE6 slow FIFO WORD4
0x1C6	[15:0]	X	R/W	STAGE6_SF_WORD5	STAGE6 slow FIFO WORD5
0x1C7	[15:0]	X	R/W	STAGE6_SF_WORD6	STAGE6 slow FIFO WORD6
0x1C8	[15:0]	X	R/W	STAGE6_SF_WORD7	STAGE6 slow FIFO WORD7
0x1C9	[15:0]	X	R/W	STAGE6_SF_AMBIENT	STAGE6 slow FIFO ambient value
0x1CA	[15:0]	X	R/W	STAGE6_FF_AVG	STAGE6 fast FIFO average value
0x1CB	[15:0]	X	R/W	STAGE6_PEAK_DETECT_WORD0	STAGE6 peak FIFO WORD0 value
0x1CC	[15:0]	X	R/W	STAGE6_PEAK_DETECT_WORD1	STAGE6 peak FIFO WORD1 value
0x1CD	[15:0]	X	R/W	STAGE6_MAX_WORD0	STAGE6 maximum value FIFO WORD0
0x1CE	[15:0]	X	R/W	STAGE6_MAX_WORD1	STAGE6 maximum value FIFO WORD1
0x1CF	[15:0]	X	R/W	STAGE6_MAX_WORD2	STAGE6 maximum value FIFO WORD2
0x1D0	[15:0]	X	R/W	STAGE6_MAX_WORD3	STAGE6 maximum value FIFO WORD3
0x1D1	[15:0]	X	R/W	STAGE6_MAX_AVG	STAGE6 average maximum FIFO value
0x1D2	[15:0]	X	R/W	STAGE6_HIGH_THRESHOLD	STAGE6 high threshold value
0x1D3	[15:0]	X	R/W	STAGE6_MAX_TEMP	STAGE6 temporary maximum value
0x1D4	[15:0]	X	R/W	STAGE6_MIN_WORD0	STAGE6 minimum value FIFO WORD0
0x1D5	[15:0]	X	R/W	STAGE6_MIN_WORD1	STAGE6 minimum value FIFO WORD1
0x1D6	[15:0]	X	R/W	STAGE6_MIN_WORD2	STAGE6 minimum value FIFO WORD2
0x1D7	[15:0]	X	R/W	STAGE6_MIN_WORD3	STAGE6 minimum value FIFO WORD3
0x1D8	[15:0]	X	R/W	STAGE6_MIN_AVG	STAGE6 average minimum FIFO value
0x1D9	[15:0]	X	R/W	STAGE6_LOW_THRESHOLD	STAGE6 low threshold value
0x1DA	[15:0]	X	R/W	STAGE6_MIN_TEMP	STAGE6 temporary minimum value
0x1DB	[15:0]	X	R/W	Unused	Set to 0

Table 46. STAGE7 Results Registers

Address	Data Bit	Default Value	Type	Name	Description
0x1DC	[15:0]	X	R/W	STAGE7_CONV_DATA	STAGE7 CDC 16-bit conversion data (copy of CDC_RESULT_S7 register)
0x1DD	[15:0]	X	R/W	STAGE7_FF_WORD0	STAGE7 fast FIFO WORD0
0x1DE	[15:0]	X	R/W	STAGE7_FF_WORD1	STAGE7 fast FIFO WORD1
0x1DF	[15:0]	X	R/W	STAGE7_FF_WORD2	STAGE7 fast FIFO WORD2
0x1E0	[15:0]	X	R/W	STAGE7_FF_WORD3	STAGE7 fast FIFO WORD3
0x1E1	[15:0]	X	R/W	STAGE7_FF_WORD4	STAGE7 fast FIFO WORD4
0x1E2	[15:0]	X	R/W	STAGE7_FF_WORD5	STAGE7 fast FIFO WORD5
0x1E3	[15:0]	X	R/W	STAGE7_FF_WORD6	STAGE7 fast FIFO WORD6
0x1E4	[15:0]	X	R/W	STAGE7_FF_WORD7	STAGE7 fast FIFO WORD7
0x1E5	[15:0]	X	R/W	STAGE7_SF_WORD0	STAGE7 slow FIFO WORD0
0x1E6	[15:0]	X	R/W	STAGE7_SF_WORD1	STAGE7 slow FIFO WORD1
0x1E7	[15:0]	X	R/W	STAGE7_SF_WORD2	STAGE7 slow FIFO WORD2
0x1E8	[15:0]	X	R/W	STAGE7_SF_WORD3	STAGE7 slow FIFO WORD3
0x1E9	[15:0]	X	R/W	STAGE7_SF_WORD4	STAGE7 slow FIFO WORD4
0x1EA	[15:0]	X	R/W	STAGE7_SF_WORD5	STAGE7 slow FIFO WORD5
0x1EB	[15:0]	X	R/W	STAGE7_SF_WORD6	STAGE7 slow FIFO WORD6
0x1EC	[15:0]	X	R/W	STAGE7_SF_WORD7	STAGE7 slow FIFO WORD7
0x1ED	[15:0]	X	R/W	STAGE7_SF_AMBIENT	STAGE7 slow FIFO ambient value
0x1EE	[15:0]	X	R/W	STAGE7_FF_AVG	STAGE7 fast FIFO average value
0x1EF	[15:0]	X	R/W	STAGE7_PEAK_DETECT_WORD0	STAGE7 peak FIFO WORD0 value
0x1F0	[15:0]	X	R/W	STAGE7_PEAK_DETECT_WORD1	STAGE7 peak FIFO WORD1 value
0x1F1	[15:0]	X	R/W	STAGE7_MAX_WORD0	STAGE7 maximum value FIFO WORD0
0x1F2	[15:0]	X	R/W	STAGE7_MAX_WORD1	STAGE7 maximum value FIFO WORD1
0x1F3	[15:0]	X	R/W	STAGE7_MAX_WORD2	STAGE7 maximum value FIFO WORD2
0x1F4	[15:0]	X	R/W	STAGE7_MAX_WORD3	STAGE7 maximum value FIFO WORD3
0x1F5	[15:0]	X	R/W	STAGE7_MAX_AVG	STAGE7 average maximum FIFO value
0x1F6	[15:0]	X	R/W	STAGE7_HIGH_THRESHOLD	STAGE7 high threshold value
0x1F7	[15:0]	X	R/W	STAGE7_MAX_TEMP	STAGE7 temporary maximum value
0x1F8	[15:0]	X	R/W	STAGE7_MIN_WORD0	STAGE7 minimum value FIFO WORD0
0x1F9	[15:0]	X	R/W	STAGE7_MIN_WORD1	STAGE7 minimum value FIFO WORD1
0x1FA	[15:0]	X	R/W	STAGE7_MIN_WORD2	STAGE7 minimum value FIFO WORD2
0x1FB	[15:0]	X	R/W	STAGE7_MIN_WORD3	STAGE7 minimum value FIFO WORD3
0x1FC	[15:0]	X	R/W	STAGE7_MIN_AVG	STAGE7 average minimum FIFO value
0x1FD	[15:0]	X	R/W	STAGE7_LOW_THRESHOLD	STAGE7 low threshold value
0x1FE	[15:0]	X	R/W	STAGE7_MIN_TEMP	STAGE7 temporary minimum value
0x1FF	[15:0]	X	R/W	Unused	Set to 0

Table 47. STAGE8 Results Registers

Address	Data Bit	Default Value	Type	Name	Description
0x200	[15:0]	X	R/W	STAGE8_CONV_DATA	STAGE8 CDC 16-bit conversion data (copy of CDC_RESULT_S8 register)
0x201	[15:0]	X	R/W	STAGE8_FF_WORD0	STAGE8 fast FIFO WORD0
0x202	[15:0]	X	R/W	STAGE8_FF_WORD1	STAGE8 fast FIFO WORD1
0x203	[15:0]	X	R/W	STAGE8_FF_WORD2	STAGE8 fast FIFO WORD2
0x204	[15:0]	X	R/W	STAGE8_FF_WORD3	STAGE8 fast FIFO WORD3
0x205	[15:0]	X	R/W	STAGE8_FF_WORD4	STAGE8 fast FIFO WORD4
0x206	[15:0]	X	R/W	STAGE8_FF_WORD5	STAGE8 fast FIFO WORD5
0x207	[15:0]	X	R/W	STAGE8_FF_WORD6	STAGE8 fast FIFO WORD6
0x208	[15:0]	X	R/W	STAGE8_FF_WORD7	STAGE8 fast FIFO WORD7
0x209	[15:0]	X	R/W	STAGE8_SF_WORD0	STAGE8 slow FIFO WORD0
0x20A	[15:0]	X	R/W	STAGE8_SF_WORD1	STAGE8 slow FIFO WORD1
0x20B	[15:0]	X	R/W	STAGE8_SF_WORD2	STAGE8 slow FIFO WORD2
0x20C	[15:0]	X	R/W	STAGE8_SF_WORD3	STAGE8 slow FIFO WORD3
0x20D	[15:0]	X	R/W	STAGE8_SF_WORD4	STAGE8 slow FIFO WORD4
0x20E	[15:0]	X	R/W	STAGE8_SF_WORD5	STAGE8 slow FIFO WORD5
0x20F	[15:0]	X	R/W	STAGE8_SF_WORD6	STAGE8 slow FIFO WORD6
0x210	[15:0]	X	R/W	STAGE8_SF_WORD7	STAGE8 slow FIFO WORD7
0x211	[15:0]	X	R/W	STAGE8_SF_AMBIENT	STAGE8 slow FIFO ambient value
0x212	[15:0]	X	R/W	STAGE8_FF_AVG	STAGE8 fast FIFO average value
0x213	[15:0]	X	R/W	STAGE8_PEAK_DETECT_WORD0	STAGE8 peak FIFO WORD0 value
0x214	[15:0]	X	R/W	STAGE8_PEAK_DETECT_WORD1	STAGE8 peak FIFO WORD1 value
0x215	[15:0]	X	R/W	STAGE8_MAX_WORD0	STAGE8 maximum value FIFO WORD0
0x216	[15:0]	X	R/W	STAGE8_MAX_WORD1	STAGE8 maximum value FIFO WORD1
0x217	[15:0]	X	R/W	STAGE8_MAX_WORD2	STAGE8 maximum value FIFO WORD2
0x218	[15:0]	X	R/W	STAGE8_MAX_WORD3	STAGE8 maximum value FIFO WORD3
0x219	[15:0]	X	R/W	STAGE8_MAX_AVG	STAGE8 average maximum FIFO value
0x21A	[15:0]	X	R/W	STAGE8_HIGH_THRESHOLD	STAGE8 high threshold value
0x21B	[15:0]	X	R/W	STAGE8_MAX_TEMP	STAGE8 temporary maximum value
0x21C	[15:0]	X	R/W	STAGE8_MIN_WORD0	STAGE8 minimum value FIFO WORD0
0x21D	[15:0]	X	R/W	STAGE8_MIN_WORD1	STAGE8 minimum value FIFO WORD1
0x21E	[15:0]	X	R/W	STAGE8_MIN_WORD2	STAGE8 minimum value FIFO WORD2
0x21F	[15:0]	X	R/W	STAGE8_MIN_WORD3	STAGE8 minimum value FIFO WORD3
0x220	[15:0]	X	R/W	STAGE8_MIN_AVG	STAGE8 average minimum FIFO value
0x221	[15:0]	X	R/W	STAGE8_LOW_THRESHOLD	STAGE8 low threshold value
0x222	[15:0]	X	R/W	STAGE8_MIN_TEMP	STAGE7 temporary minimum value
0x223	[15:0]	X	R/W	Unused	Set to 0

Table 48. STAGE9 Results Registers

Address	Data Bit	Default Value	Type	Name	Description
0x224	[15:0]	X	R/W	STAGE9_CONV_DATA	STAGE9 CDC 16-bit conversion data (copy of CDC_RESULT_S9 register)
0x225	[15:0]	X	R/W	STAGE9_FF_WORD0	STAGE9 fast FIFO WORD0
0x226	[15:0]	X	R/W	STAGE9_FF_WORD1	STAGE9 fast FIFO WORD1
0x227	[15:0]	X	R/W	STAGE9_FF_WORD2	STAGE9 fast FIFO WORD2
0x228	[15:0]	X	R/W	STAGE9_FF_WORD3	STAGE9 fast FIFO WORD3
0x229	[15:0]	X	R/W	STAGE9_FF_WORD4	STAGE9 fast FIFO WORD4
0x22A	[15:0]	X	R/W	STAGE9_FF_WORD5	STAGE9 fast FIFO WORD5
0x22B	[15:0]	X	R/W	STAGE9_FF_WORD6	STAGE9 fast FIFO WORD6
0x22C	[15:0]	X	R/W	STAGE9_FF_WORD7	STAGE9 fast FIFO WORD7
0x22D	[15:0]	X	R/W	STAGE9_SF_WORD0	STAGE9 slow FIFO WORD0
0x22E	[15:0]	X	R/W	STAGE9_SF_WORD1	STAGE9 slow FIFO WORD1
0x22F	[15:0]	X	R/W	STAGE9_SF_WORD2	STAGE9 slow FIFO WORD2
0x230	[15:0]	X	R/W	STAGE9_SF_WORD3	STAGE9 slow FIFO WORD3
0x231	[15:0]	X	R/W	STAGE9_SF_WORD4	STAGE9 slow FIFO WORD4
0x232	[15:0]	X	R/W	STAGE9_SF_WORD5	STAGE9 slow FIFO WORD5
0x233	[15:0]	X	R/W	STAGE9_SF_WORD6	STAGE9 slow FIFO WORD6
0x234	[15:0]	X	R/W	STAGE9_SF_WORD7	STAGE9 slow FIFO WORD7
0x235	[15:0]	X	R/W	STAGE9_SF_AMBIENT	STAGE9 slow FIFO ambient value
0x236	[15:0]	X	R/W	STAGE9_FF_AVG	STAGE9 fast FIFO average value
0x237	[15:0]	X	R/W	STAGE9_PEAK_DETECT_WORD0	STAGE9 peak FIFO WORD0 value
0x238	[15:0]	X	R/W	STAGE9_PEAK_DETECT_WORD1	STAGE9 peak FIFO WORD1 value
0x239	[15:0]	X	R/W	STAGE9_MAX_WORD0	STAGE9 maximum value FIFO WORD0
0x23A	[15:0]	X	R/W	STAGE9_MAX_WORD1	STAGE9 maximum value FIFO WORD1
0x23B	[15:0]	X	R/W	STAGE9_MAX_WORD2	STAGE9 maximum value FIFO WORD2
0x23C	[15:0]	X	R/W	STAGE9_MAX_WORD3	STAGE9 maximum value FIFO WORD3
0x23D	[15:0]	X	R/W	STAGE9_MAX_AVG	STAGE9 average maximum FIFO value
0x23E	[15:0]	X	R/W	STAGE9_HIGH_THRESHOLD	STAGE9 high threshold value
0x23F	[15:0]	X	R/W	STAGE9_MAX_TEMP	STAGE9 temporary maximum value
0x240	[15:0]	X	R/W	STAGE9_MIN_WORD0	STAGE9 minimum value FIFO WORD0
0x241	[15:0]	X	R/W	STAGE9_MIN_WORD1	STAGE9 minimum value FIFO WORD1
0x242	[15:0]	X	R/W	STAGE9_MIN_WORD2	STAGE9 minimum value FIFO WORD2
0x243	[15:0]	X	R/W	STAGE9_MIN_WORD3	STAGE9 minimum value FIFO WORD3
0x244	[15:0]	X	R/W	STAGE9_MIN_AVG	STAGE9 average minimum FIFO value
0x245	[15:0]	X	R/W	STAGE9_LOW_THRESHOLD	STAGE9 low threshold value
0x246	[15:0]	X	R/W	STAGE9_MIN_TEMP	STAGE9 temporary minimum value
0x247	[15:0]	X	R/W	Unused	Set to 0

Table 49. STAGE10 Results Registers

Address	Data Bit	Default Value	Type	Name	Description
0x248	[15:0]	X	R/W	STAGE10_CONV_DATA	STAGE10 CDC 16-bit conversion data (copy of CDC_RESULT_S10 register)
0x249	[15:0]	X	R/W	STAGE10_FF_WORD0	STAGE10 fast FIFO WORD0
0x24A	[15:0]	X	R/W	STAGE10_FF_WORD1	STAGE10 fast FIFO WORD1
0x24B	[15:0]	X	R/W	STAGE10_FF_WORD2	STAGE10 fast FIFO WORD2
0x24C	[15:0]	X	R/W	STAGE10_FF_WORD3	STAGE10 fast FIFO WORD3
0x24D	[15:0]	X	R/W	STAGE10_FF_WORD4	STAGE10 fast FIFO WORD4
0x24E	[15:0]	X	R/W	STAGE10_FF_WORD5	STAGE10 fast FIFO WORD5
0x24F	[15:0]	X	R/W	STAGE10_FF_WORD6	STAGE10 fast FIFO WORD6
0x250	[15:0]	X	R/W	STAGE10_FF_WORD7	STAGE10 fast FIFO WORD7
0x251	[15:0]	X	R/W	STAGE10_SF_WORD0	STAGE10 slow FIFO WORD0
0x252	[15:0]	X	R/W	STAGE10_SF_WORD1	STAGE10 slow FIFO WORD1
0x253	[15:0]	X	R/W	STAGE10_SF_WORD2	STAGE10 slow FIFO WORD2
0x254	[15:0]	X	R/W	STAGE10_SF_WORD3	STAGE10 slow FIFO WORD3
0x255	[15:0]	X	R/W	STAGE10_SF_WORD4	STAGE10 slow FIFO WORD4
0x256	[15:0]	X	R/W	STAGE10_SF_WORD5	STAGE10 slow FIFO WORD5
0x257	[15:0]	X	R/W	STAGE10_SF_WORD6	STAGE10 slow FIFO WORD6
0x258	[15:0]	X	R/W	STAGE10_SF_WORD7	STAGE10 slow FIFO WORD7
0x259	[15:0]	X	R/W	STAGE10_SF_AMBIENT	STAGE10 slow FIFO ambient value
0x25A	[15:0]	X	R/W	STAGE10_FF_AVG	STAGE10 fast FIFO average value
0x25B	[15:0]	X	R/W	STAGE10_PEAK_DETECT_WORD0	STAGE10 peak FIFO WORD0 value
0x25C	[15:0]	X	R/W	STAGE10_PEAK_DETECT_WORD1	STAGE10 peak FIFO WORD1 value
0x25D	[15:0]	X	R/W	STAGE10_MAX_WORD0	STAGE10 maximum value FIFO WORD0
0x25E	[15:0]	X	R/W	STAGE10_MAX_WORD1	STAGE10 maximum value FIFO WORD1
0x25F	[15:0]	X	R/W	STAGE10_MAX_WORD2	STAGE10 maximum value FIFO WORD2
0x260	[15:0]	X	R/W	STAGE10_MAX_WORD3	STAGE10 maximum value FIFO WORD3
0x261	[15:0]	X	R/W	STAGE10_MAX_AVG	STAGE10 average maximum FIFO value
0x262	[15:0]	X	R/W	STAGE10_HIGH_THRESHOLD	STAGE10 high threshold value
0x263	[15:0]	X	R/W	STAGE10_MAX_TEMP	STAGE10 temporary maximum value
0x264	[15:0]	X	R/W	STAGE10_MIN_WORD0	STAGE10 minimum value FIFO WORD0
0x265	[15:0]	X	R/W	STAGE10_MIN_WORD1	STAGE10 minimum value FIFO WORD1
0x266	[15:0]	X	R/W	STAGE10_MIN_WORD2	STAGE10 minimum value FIFO WORD2
0x267	[15:0]	X	R/W	STAGE10_MIN_WORD3	STAGE10 minimum value FIFO WORD3
0x268	[15:0]	X	R/W	STAGE10_MIN_AVG	STAGE10 average minimum FIFO value
0x269	[15:0]	X	R/W	STAGE10_LOW_THRESHOLD	STAGE10 low threshold value
0x26A	[15:0]	X	R/W	STAGE10_MIN_TEMP	STAGE10 temporary minimum value
0x26B	[15:0]	X	R/W	Unused	Set to 0

Table 50. STAGE11 Results Registers

Address	Data Bit	Default Value	Type	Name	Description
0x26C	[15:0]	X	R/W	STAGE11_CONV_DATA	STAGE11 CDC 16-bit conversion data (copy of CDC_RESULT_S11 register)
0x26D	[15:0]	X	R/W	STAGE11_FF_WORD0	STAGE11 fast FIFO WORD0
0x26E	[15:0]	X	R/W	STAGE11_FF_WORD1	STAGE11 fast FIFO WORD1
0x26F	[15:0]	X	R/W	STAGE11_FF_WORD2	STAGE11 fast FIFO WORD2
0x270	[15:0]	X	R/W	STAGE11_FF_WORD3	STAGE11 fast FIFO WORD3
0x271	[15:0]	X	R/W	STAGE11_FF_WORD4	STAGE11 fast FIFO WORD4
0x272	[15:0]	X	R/W	STAGE11_FF_WORD5	STAGE11 fast FIFO WORD5
0x273	[15:0]	X	R/W	STAGE11_FF_WORD6	STAGE11 fast FIFO WORD6
0x274	[15:0]	X	R/W	STAGE11_FF_WORD7	STAGE11 fast FIFO WORD7
0x275	[15:0]	X	R/W	STAGE11_SF_WORD0	STAGE11 slow FIFO WORD0
0x276	[15:0]	X	R/W	STAGE11_SF_WORD1	STAGE11 slow FIFO WORD1
0x277	[15:0]	X	R/W	STAGE11_SF_WORD2	STAGE11 slow FIFO WORD2
0x278	[15:0]	X	R/W	STAGE11_SF_WORD3	STAGE11 slow FIFO WORD3
0x279	[15:0]	X	R/W	STAGE11_SF_WORD4	STAGE11 slow FIFO WORD4
0x27A	[15:0]	X	R/W	STAGE11_SF_WORD5	STAGE11 slow FIFO WORD5
0x27B	[15:0]	X	R/W	STAGE11_SF_WORD6	STAGE11 slow FIFO WORD6
0x27C	[15:0]	X	R/W	STAGE11_SF_WORD7	STAGE11 slow FIFO WORD7
0x27D	[15:0]	X	R/W	STAGE11_SF_AMBIENT	STAGE11 slow FIFO ambient value
0x27E	[15:0]	X	R/W	STAGE11_FF_AVG	STAGE11 fast FIFO average value
0x27F	[15:0]	X	R/W	STAGE11_PEAK_DETECT_WORD0	STAGE11 peak FIFO WORD0 value
0x280	[15:0]	X	R/W	STAGE11_PEAK_DETECT_WORD1	STAGE11 peak FIFO WORD1 value
0x281	[15:0]	X	R/W	STAGE11_MAX_WORD0	STAGE11 maximum value FIFO WORD0
0x282	[15:0]	X	R/W	STAGE11_MAX_WORD1	STAGE11 maximum value FIFO WORD1
0x283	[15:0]	X	R/W	STAGE11_MAX_WORD2	STAGE11 maximum value FIFO WORD2
0x284	[15:0]	X	R/W	STAGE11_MAX_WORD3	STAGE11 maximum value FIFO WORD3
0x285	[15:0]	X	R/W	STAGE11_MAX_AVG	STAGE11 average maximum FIFO value
0x286	[15:0]	X	R/W	STAGE11_HIGH_THRESHOLD	STAGE11 high threshold value
0x287	[15:0]	X	R/W	STAGE11_MAX_TEMP	STAGE11 temporary maximum value
0x288	[15:0]	X	R/W	STAGE11_MIN_WORD0	STAGE11 minimum value FIFO WORD0
0x289	[15:0]	X	R/W	STAGE11_MIN_WORD1	STAGE11 minimum value FIFO WORD1
0x28A	[15:0]	X	R/W	STAGE11_MIN_WORD2	STAGE11 minimum value FIFO WORD2
0x28B	[15:0]	X	R/W	STAGE11_MIN_WORD3	STAGE11 minimum value FIFO WORD3
0x28C	[15:0]	X	R/W	STAGE11_MIN_AVG	STAGE11 average minimum FIFO value
0x28D	[15:0]	X	R/W	STAGE11_LOW_THRESHOLD	STAGE11 low threshold value
0x28E	[15:0]	X	R/W	STAGE11_MIN_TEMP	STAGE11 temporary minimum value
0x28F	[15:0]	X	R/W	Unused	Set to 0

OUTLINE DIMENSIONS

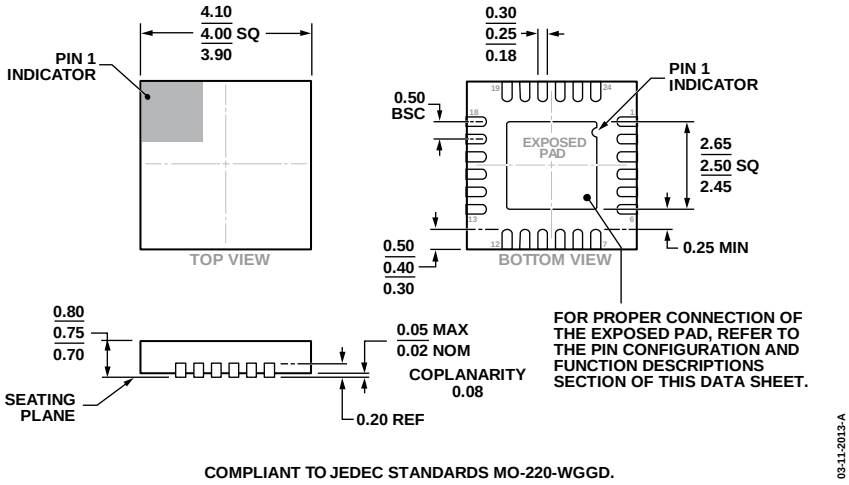

COMPLIANT TO JEDEC STANDARDS MO-220-WGGD.

Figure 63. 24-Lead Frame Chip Scale Package [LFCSP_WQ]
4 mm × 4 mm Very Very Thin Quad
(CP-24-7)
Dimensions shown in millimeters

ORDERING GUIDE

Model[1, 2]	Temperature Range	Description	Serial Interface Description	Package Description	Package Option
AD7147ACPZ-REEL	−40°C to +85°C	Wake up on touch	SPI Interface	24-Lead LFCSP_WQ	CP-24-7
AD7147ACPZ-500RL7	−40°C to +85°C	Wake up on touch	SPI Interface	24-Lead LFCSP_WQ	CP-24-7
AD7147PACPZ-RL	−40°C to +85°C	Wake up on proximity	SPI Interface	24-Lead LFCSP_WQ	CP-24-7
AD7147PACPZ-500R7	−40°C to +85°C	Wake up on proximity	SPI Interface	24-Lead LFCSP_WQ	CP-24-7
AD7147ACPZ-1REEL	−40°C to +85°C	Wake up on touch	I^2C Interface	24-Lead LFCSP_WQ	CP-24-7
AD7147ACPZ-1500RL7	−40°C to +85°C	Wake up on touch	I^2C Interface	24-Lead LFCSP_WQ	CP-24-7
AD7147PACPZ-1RL	−40°C to +85°C	Wake up on proximity	I^2C Interface	24-Lead LFCSP_WQ	CP-24-7
AD7147PACPZ-1500R7	−40°C to +85°C	Wake up on proximity	I^2C Interface	24-Lead LFCSP_WQ	CP-24-7
AD7147WPACPZ-RL	−40°C to +85°C	Wake up on proximity	SPI Interface	24-Lead LFCSP_WQ	CP-24-7
AD7147WPACPZ-500R7	−40°C to +85°C	Wake up on proximity	SPI Interface	24-Lead LFCSP_WQ	CP-24-7
AD7147WPACPZ-1RL	−40°C to +85°C	Wake up on proximity	I^2C Interface	24-Lead LFCSP_WQ	CP-24-7
AD7147WPACPZ-1500R	−40°C to +85°C	Wake up on proximity	I^2C Interface	24-Lead LFCSP_WQ	CP-24-7
EVAL-AD7147EBZ			SPI Interface	Evaluation Board	
EVAL-AD7147-1EBZ			I^2C Interface	Evaluation Board	

[1] Z = RoHS Compliant Part.
[2] W = Qualified for Automotive Applications.

AUTOMOTIVE PRODUCTS

The AD7147W models are available with controlled manufacturing to support the quality and reliability requirements of automotive applications. Note that these automotive models may have specifications that differ from the commercial models; therefore, designers should review the Specifications section of this data sheet carefully. Only the automotive grade products shown are available for use in automotive applications. Contact your local Analog Devices account representative for specific product ordering information and to obtain the specific Automotive Reliability reports for these models.

©2007–2015 Analog Devices, Inc. All rights reserved. Trademarks and registered trademarks are the property of their respective owners.
D06663-0-1/15(E)