CMOS 4-/8-Channel Analog Multiplexers

ADG508A/ADG509A

FEATURES

- 44 V supply maximum rating
- V_{SS} to V_{DD} analog signal range
- Single-/dual-supply specifications
- Wide supply range: 10.8 V to 16.5 V
- Extended plastic temperature range: −40°C to +85°C
- Low power dissipation: 28 mW maximum
- Low leakage: 20 pA typical
- Available in 16-lead DIP/SOIC and 20-lead PLCC/LCC packages
- Superior alternative to
  - DG508A, HI-508
  - DG509A, HI-509

FUNCTIONAL BLOCK DIAGRAMS

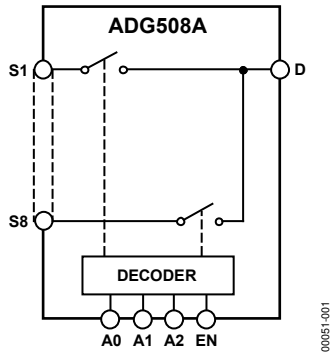

Figure 1. ADG508A

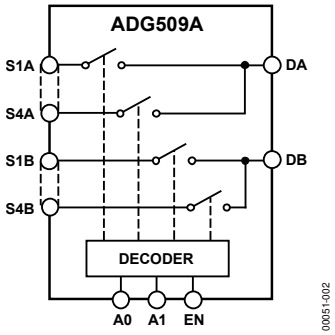

Figure 2. ADG509A

GENERAL DESCRIPTION

The ADG508A and ADG509A are CMOS monolithic analog multiplexers with eight channels and dual four channels, respectively. The ADG508A switches one of eight inputs to a common output, depending on the state of three binary addresses and an enable input. The ADG509A switches one of four differential inputs to a common differential output, depending on the state of two binary addresses and an enable input. Both devices have TTL and 5 V CMOS logic-compatible digital inputs.

The ADG508A and ADG509A are designed on an enhanced LC^2MOS process that gives an increased signal capability of V_{SS} to V_{DD} and enables operation over a wide range of supply voltages. The devices can comfortably operate anywhere in the 10.8 V to 16.5 V single- or dual-supply range. These multiplexers also feature high switching speeds and low R_{ON}.

PRODUCT HIGHLIGHTS

1. Single-/Dual-Supply Specifications with a Wide Tolerance. The devices are specified in the 10.8 V to 16.5 V range for both single and dual supplies.
2. Extended Signal Range. The enhanced LC^2MOS processing results in a high breakdown and an increased analog signal range of V_{SS} to V_{DD}.
3. Break-Before-Make Switching. Switches are guaranteed break-before-make so that input signals are protected against momentary shorting.
4. Low Leakage. Leakage currents in the range of 20 pA make these multiplexers suitable for high precision circuits.

Rev. D

Information furnished by Analog Devices is believed to be accurate and reliable. However, no responsibility is assumed by Analog Devices for its use, nor for any infringements of patents or other rights of third parties that may result from its use. Specifications subject to change without notice. No license is granted by implication or otherwise under any patent or patent rights of Analog Devices. Trademarks and registered trademarks are the property of their respective owners.

One Technology Way, P.O. Box 9106, Norwood, MA 02062-9106, U.S.A.
Tel: 781.329.4700 **www.analog.com**
Fax: 781.461.3113 **©2009 Analog Devices, Inc. All rights reserved.**

TABLE OF CONTENTS

Features 1
Functional Block Diagrams 1
General Description 1
Product Highlights 1
Revision History 2
Specifications 3
Dual Supply 3
Single Supply 5
Absolute Maximum Ratings 7
ESD Caution 7
Pin Configurations and Function Descriptions 8
Typical Performance Characteristics 10
Test Circuits 11
Single-Supply Octal DAC Application 13
Outline Dimensions 14
Ordering Guide 16

REVISION HISTORY

7/09—Rev. C to Rev. D
Changes to Table 4 8

3/07—Rev. B to Rev. C
Updated Format ..... Universal
Changes to Table 3 6
Inserted Table 4 7
Inserted Table 6 8
Changes to Figure 24 12
Updated Outline Dimensions 13
Changes to Ordering Guide 15

SPECIFICATIONS

DUAL SUPPLY

V_{DD} = 10.8 V to 16.5 V, V_{SS} = −10.8 V to −16.5 V, unless otherwise noted.

Table 1.

Parameter	ADG508A/ ADG509A K Version +25°C	ADG508A/ ADG509A K Version −40°C to +85°	ADG508A/ ADG509A B Version +25°C	ADG508A/ ADG509A B Version −40°C to +85°C	ADG508A/ ADG509A T Version +25°C	ADG508A/ ADG509A T Version −55°C to +125°C	Unit	Comments
ANALOG SWITCH								
Analog Signal Range	V_{SS}	V_{SS}	V_{SS}	V_{SS}	V_{SS}	V_{SS}	V min	
	V_{DD}	V_{DD}	V_{DD}	V_{DD}	V_{DD}	V_{DD}	V max	
R_{ON}	280		280		280		Ω typ	−10 V ≤ V_S ≤ +10 V, I_{DS} = 1 mA; see Figure 14
	450	600	450	600	450	600	Ω max	
	300	400	300	400			Ω max	V_{DD} = 15 V (±10%), V_{SS} = −15 V (±10%)
					300	400	Ω max	V_{DD} = 15 V (±5%), V_{SS} = −15 V (±5%)
R_{ON} Drift	0.6		0.6		0.6		%/°C typ	V_S = 0, I_{DS} = 1 mA
R_{ON} Match	5		5		5		% typ	−10 V ≤ V_S ≤ +10 V, I_{DS} = 1 mA
I_S (Off), Off Input Leakage	0.02		0.02		0.02		nA typ	V1 = ±10 V, V2 = ∓10 V; see Figure 15
	1	50	1	50	1	50	nA max	
I_D (Off), Off Output Leakage	0.04		0.04		0.04		nA typ	V1 = ±10 V, V2 = ∓10 V; see Figure 16
ADG508A	1	100	1	100	1	100	nA max	
ADG509A	1	50	1	50	1	50	nA max	
I_D (On), On Channel Leakage	0.04		0.04		0.04		nA typ	V1 = V2 = ±10 V; see Figure 17
ADG508A	1	100	1	100	1	100	nA max	
ADG509A	1	50	1	50	1	50	nA max	
I_{DIFF}, Differential Off Output Leakage (ADG509A Only)		25		25		25	nA max	V1 = ±10 V, V2 = ∓10 V; see Figure 18
DIGITAL CONTROL								
V_{INH}, Input High Voltage		2.4		2.4		2.4	V min	
V_{INL}, Input Low Voltage		0.8		0.8		0.8	V max	
I_{INL} or I_{INH}		1		1		1	µA max	V_{IN} = 0 to V_{DD}
C_{IN} Digital Input Capacitance	8		8		8		pF max	
DYNAMIC CHARACTERISTICS								
$t_{TRANSITION}$[1]	200		200		200		ns typ	V1 = ±10 V, V2 = ∓10 V; see Figure 19
	300	400	300	400	300	400	ns max	
t_{OPEN}[1]	50		50		50		ns typ	See Figure 20
	25	10	25	10	25	10	ns min	
t_{ON} (EN)[1]	200		200		200		ns typ	See Figure 21
	300	400	300	400	300	400	ns max	
t_{OFF} (EN)[1]	200		200		200		ns typ	See Figure 21
	300	400	300	400	300	400	ns max	
OffF Isolation	68		68		68		dB typ	V_{EN} = 0.8 V, R_L = 1 kΩ, C_L = 15 pF, V_S = 7 V rms, f = 100 kHz
	50		50		50		dB min	

Parameter	ADG508A/ ADG509A K Version +25°C	ADG508A/ ADG509A K Version −40°C to +85°	ADG508A/ ADG509A B Version +25°C	ADG508A/ ADG509A B Version −40°C to +85°C	ADG508A/ ADG509A T Version +25°C	ADG508A/ ADG509A T Version −55°C to +125°C	Unit	Comments
C_S (Off)	5		5		5		pF typ	V_{EN} = 0.8 V
C_D (Off)								
ADG508A	22		22		22		pF typ	V_{EN} = 0.8 V
ADG509A	11		11		11		pF typ	
Q_{INJ}, Charge Injection	4		4		4		pC typ	R_S = 0 Ω, V_S = 0; see Figure 22
POWER SUPPLY								
I_{DD}	0.6		0.6		0.6		mA typ	V_{IN} = V_{INL} or V_{INH}
		1.5		1.5		1.5	mA max	
I_{SS}	20		20		20		µA typ	V_{IN} = V_{INL} or V_{INH}
		0.2		0.2		0.2	mA max	
Power Dissipation	10		10		10		mW typ	
		28		28		28	mW max	

[1] Sample tested at 25°C to ensure compliance.

SINGLE SUPPLY

V_{DD} = 10.8 V to 16.5 V, V_{SS} = GND = 0 V, unless otherwise noted.

Table 2.

Parameter	ADG508A/ ADG509A K Version +25°C	ADG508A/ ADG509A K Version −40°C to +85°C	ADG508A/ ADG509A B Version +25°C	ADG508A/ ADG509A B Version −40°C to +85°C	ADG508A/ ADG509A T Version +25°C	ADG508A/ ADG509A T Version −55°C to +125°C	Unit	Comments
ANALOG SWITCH								
Analog Signal Range	GND	GND	GND	GND	GND	GND	V min	
	V_{DD}	V_{DD}	V_{DD}	V_{DD}	V_{DD}	V_{DD}	V max	
R_{ON}	500		500		500		Ω typ	GND ≤ V_S ≤ 10 V, I_{DS} = 0.5 mA; see Figure 14
	700	1000	700	1000	700	1000	Ω max	
R_{ON} Drift	0.6		0.6		0.6		%/°C typ	V_S = 0, I_{DS} = 0.5 mA
R_{ON} Match	5		5		5		% typ	GND ≤ V_S ≤ 10 V, I_{DS} = 0.5 mA
I_S (Off), Off Input Leakage	0.02		0.02		0.02		nA typ	V1 = 10 V/GND, V2 = GND/10 V; see Figure 15
	1	50	1	50	1	50	nA max	
I_D (Off), Off Output Leakage	0.04		0.04		0.04		nA typ	V1 = 10 V/GND, V2 = GND/10 V; see Figure 16
ADG508A	1	100	1	100	1	100	nA max	
ADG509A	1	50	1	50	1	50	nA max	
I_D (On), On Channel Leakage	0.04		0.04		0.04		nA typ	V1 = V2 = 10 V/GND; see Figure 17
ADG508A	1	100	1	100	1	100	nA max	
ADG509A	1	50	1	50	1	50	nA max	
I_{DIFF}, Differential Off Output Leakage (ADG509A Only)		25		25		25	nA max	V1 = 10 V/GND, V2 = GND/10 V; see Figure 18
DIGITAL CONTROL								
V_{INH}, Input High Voltage		2.4		2.4		2.4	V min	
V_{INL}, Input Low Voltage		0.8		0.8		0.8	V max	
I_{INL} or I_{INH}		1		1		1	μA max	V_{IN} = 0 to V_{DD}
C_{IN} Digital Input Capacitance	8		8		8		pF max	
DYNAMIC CHARACTERISTICS								
$t_{TRANSITION}$[1]	300		300		300		ns typ	V1 = 10 V/GND, V2 = GND/10 V; see Figure 19
	450	600	450	600	450	600	ns max	
t_{OPEN}[1]	50		50		50		ns typ	See Figure 20
	25	10	25	10	25	10	ns min	
t_{ON} (EN)[1]	250		250		250		ns typ	See Figure 21
	450	600	450	600	450	600	ns max	
t_{OFF} (EN)[1]	250		250		250		ns typ	See Figure 21
	450	600	450	600	450	600	ns max	
Off Isolation	68		68		68		dB typ	V_{EN} = 0.8 V, R_L = 1kΩ, C_L = 15 pF, V_S = 3.5 V rms, f = 100 kHz
	50		50		50		dB min	
C_S (Off)	5		5		5		pF typ	V_{EN} = 0.8 V
C_D (Off)								
ADG508A	22		22		22		pF typ	V_{EN} = 0.8 V
ADG509A	11		11		11		pF typ	
Q_{INJ}, Charge Injection	4		4		4		pC typ	R_S = 0 Ω, V_S = 0 V; see Figure 22

Parameter	ADG508A/ ADG509A K Version +25°C	ADG508A/ ADG509A K Version −40°C to +85°C	ADG508A/ ADG509A B Version +25°C	ADG508A/ ADG509A B Version −40°C to +85°C	ADG508A/ ADG509A T Version +25°C	ADG508A/ ADG509A T Version −55°C to +125°C	Unit	Comments
POWER SUPPLY								
I_{DD}	0.6		0.6		0.6		mA typ	$V_{IN} = V_{INL}$ or V_{INH}
		1.5		1.5		1.5	mA max	
Power Dissipation	10		10		10		mW typ	
		25		25		25	mW max	

[1] Sample tested at 25°C to ensure compliance.

ABSOLUTE MAXIMUM RATINGS

T_A = 25°C, unless otherwise noted.

Table 3.

Parameter	Ratings
V_{DD} to V_{SS}	44 V
V_{DD} to GND	32 V
V_{SS} to GND	−32 V
Analog Inputs[1]	
Voltage at S, D	V_{SS} − 2 V to V_{DD} + 2 V or 20 mA, whichever occurs first
Continuous Current, S or D	20 mA
Pulsed Current S or D	
1 ms Duration, 10% Duty Cycle	40 mA
Digital Inputs[1]	
Voltage at A, EN	V_{SS} − 4 V to V_{DD} + 4 V or 20 mA, whichever occurs first
Power Dissipation (Any Package)	
Up to 75°C	470 mW
Derates Above 75°C by	6 mW/°C
Operating Temperature	
Commercial (K Version)	−40°C to +85°C
Industrial (B Version)	−40°C to +85°C
Extended (T Version)	−55°C to +125°C
Storage Temperature Range	−65°C to +150°C

[1]Overvoltage at A, EN, S, or D is clamped by diodes. Current should be limited to the maximum rating shown in Table 3.

Stresses above those listed under Absolute Maximum Ratings may cause permanent damage to the device. This is a stress rating only; functional operation of the device at these or any other conditions above those indicated in the operational section of this specification is not implied. Exposure to absolute maximum rating conditions for extended periods may affect device reliability.

ESD CAUTION



ESD (electrostatic discharge) sensitive device. Charged devices and circuit boards can discharge without detection. Although this product features patented or proprietary protection circuitry, damage may occur on devices subjected to high energy ESD. Therefore, proper ESD precautions should be taken to avoid performance degradation or loss of functionality.

PIN CONFIGURATIONS AND FUNCTION DESCRIPTIONS

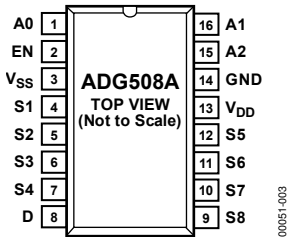

Figure 3. ADG508A DIP, SOIC

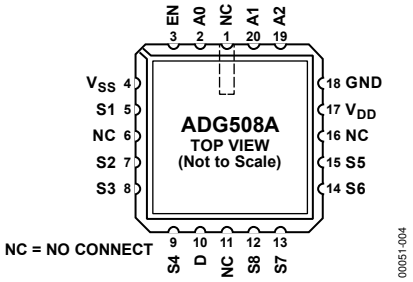

Figure 4. ADG508A LCC

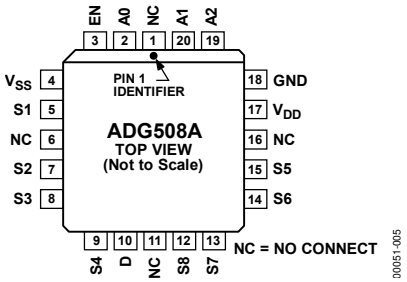

Figure 5. ADG508A PLCC

Table 4. ADG508A Pin Function Description

Pin Number			
DIP/SOIC	**PLCC/LCC**	**Mnemonic**	**Description**
1	2	A0	Logic Control Input.
2	3	EN	Active High Digital Input. When low, the device is disabled and all switches are off. When high, Ax logic inputs determine on switches.
3	4	V_{SS}	Most Negative Power Supply Potential in Dual Supplies. In single-supply applications, it can be connected to ground.
4	5	S1	Source Terminal 1. Can be an input or an output.
5	7	S2	Source Terminal 2. Can be an input or an output.
6	8	S3	Source Terminal 3. Can be an input or an output.
7	9	S4	Source Terminal 4. Can be an input or an output.
8	10	D	Drain Terminal. Can be an input or an output.
9	12	S8	Source Terminal 8. Can be an input or an output.
10	13	S7	Source Terminal 7. Can be an input or an output.
11	14	S6	Source Terminal 6. Can be an input or an output.
12	15	S5	Source Terminal 5. Can be an input or an output.
13	17	V_{DD}	Most Positive Power Supply Potential.
14	18	GND	Ground (0 V) Reference.
15	19	A2	Logic Control Input.
16	20	A1	Logic Control Input.
N/A	1	NC	No Connect.
N/A	6	NC	No Connect.
N/A	11	NC	No Connect.
N/A	16	NC	No Connect.

Table 5. ADG508A Truth Table

A2	A1	A0	EN	On Switch
X[1]	X[1]	X[1]	0	None
0	0	0	1	1
0	0	1	1	2
0	1	0	1	3
0	1	1	1	4
1	0	0	1	5
1	0	1	1	6
1	1	0	1	7
1	1	1	1	8

[1] X = don't care.

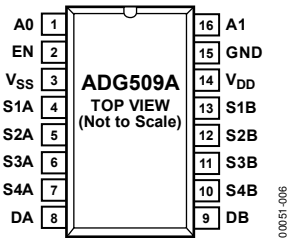

Figure 6. ADG509A DIP, SOIC

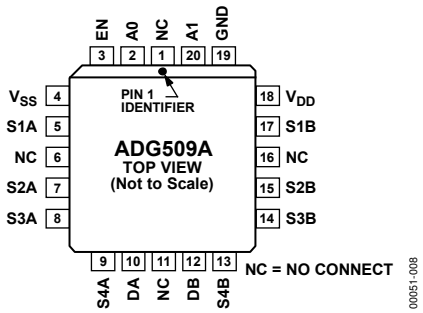

Figure 7. ADG509A PLCC

Table 6. ADG509A Pin Function Description

Pin Number			
DIP/SOIC	**PLCC/LCC**	**Mnemonic**	**Description**
1	2	A0	Logic Control Input.
2	3	EN	Active High Digital Input. When low, the device is disabled and all switches are off. When high, Ax logic inputs determine on switches.
3	4	V_{SS}	Most Negative Power Supply Potential in Dual Supplies. In single-supply applications, it can be connected to ground.
4	5	S1A	Source Terminal 1A. Can be an input or an output.
5	7	S2A	Source Terminal 2A. Can be an input or an output.
6	8	S3A	Source Terminal 3A. Can be an input or an output.
7	9	S4A	Source Terminal 4A. Can be an input or an output.
8	10	DA	Drain Terminal A. Can be an input or an output.
9	12	DB	Drain Terminal B. Can be an input or an output.
10	13	S4B	Source Terminal 4B. Can be an input or an output.
11	14	S3B	Source Terminal 3B. Can be an input or an output.
12	15	S2B	Source Terminal 2B. Can be an input or an output.
13	17	S1B	Source Terminal 1B. Can be an input or an output.
14	18	V_{DD}	Most Positive Power Supply Potential.
15	19	GND	Ground (0 V) Reference.
16	20	A1	Logic Control Input.
N/A	1	NC	No Connect.
N/A	6	NC	No Connect.
N/A	11	NC	No Connect.
N/A	16	NC	No Connect.

Table 7. ADG509A Truth Table

A1	A0	EN	On Switch Pair
X[1]	X[1]	0	None
0	0	1	1
0	1	1	2
1	0	1	3
1	1	1	4

[1] X = don't care.

TYPICAL PERFORMANCE CHARACTERISTICS

The multiplexers are guaranteed functional with reduced single or dual supplies down to 4.5 V.

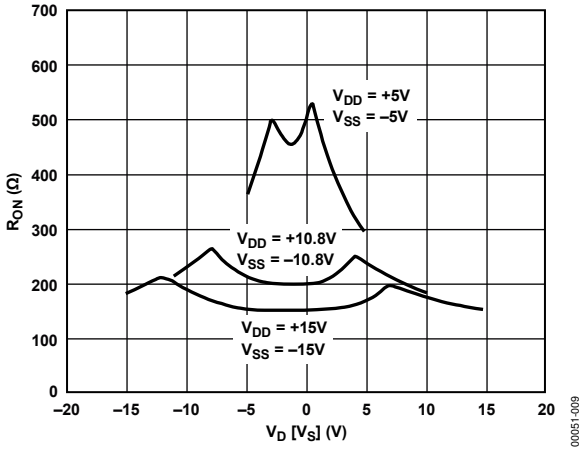

Figure 8. R_{ON} as a Function of V_D (V_S): Dual-Supply Voltage, T_A = 25°C

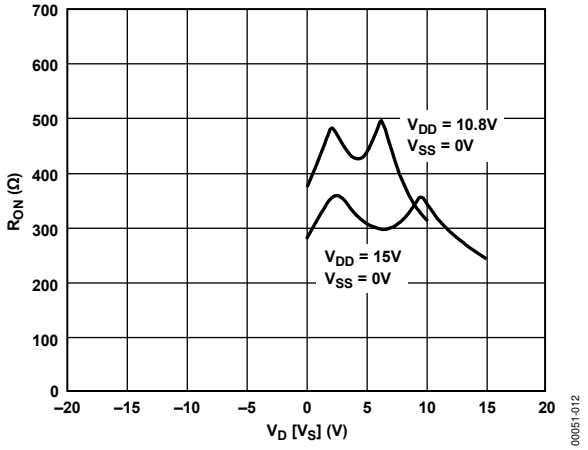

Figure 11. R_{ON} as a Function of V_D (V_S) Single-Supply Voltage, T_A = 25°C

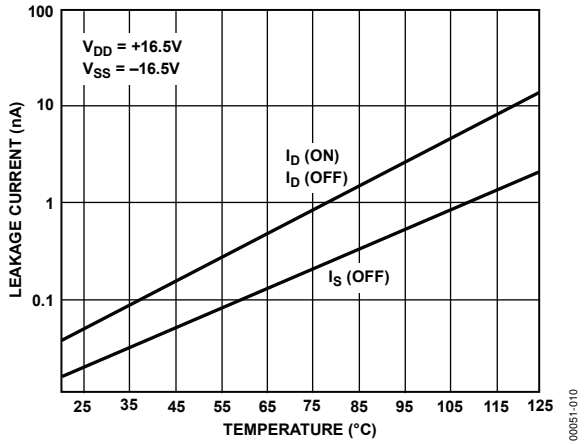

Figure 9. Leakage Current as a Function of Temperature (Note: Leakage Currents Reduce as the Supply Voltages Reduce)

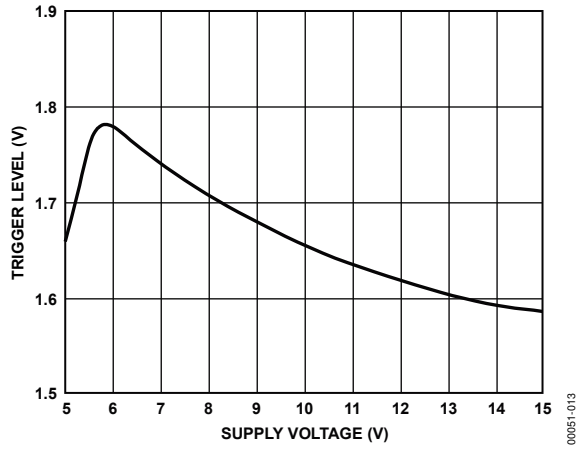

Figure 12. Trigger Levels vs. Power Supply Voltage, Dual or Single Supply, T_A = 25°C

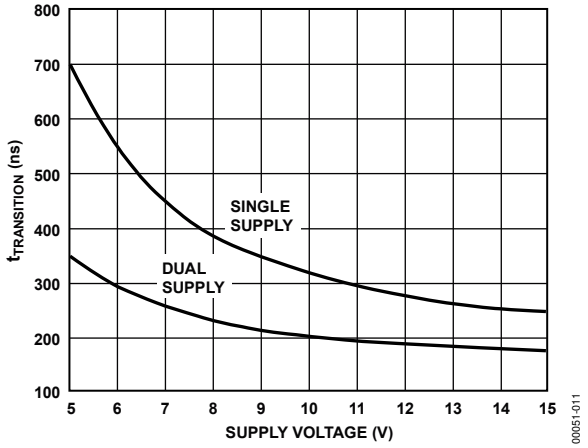

Figure 10. $t_{TRANSITION}$ vs. Supply Voltage: Dual and Single Supplies, T_A = 25°C (Note: For V_{DD} and $|V_{SS}|$ < 10 V; V1 = V_{DD}/V_{SS}, V2 = V_{SS}/V_{DD}. (see Figure 19))

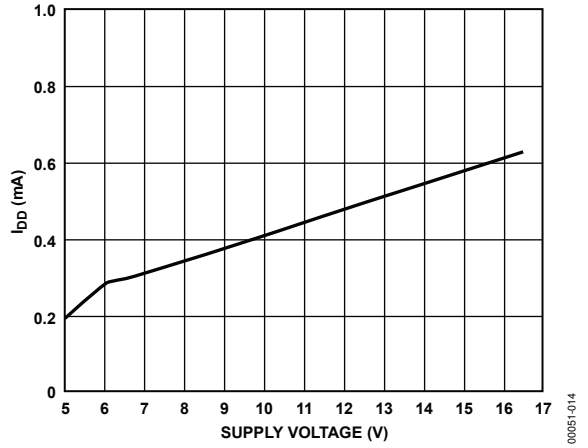

Figure 13. I_{DD} vs. Supply Voltage: Dual or Single Supply, T_A = 25°C

TEST CIRCUITS

Note: All digital input signal rise and fall times measured from 10% to 90% of 3 V. $t_R = t_F = 20$ ns.

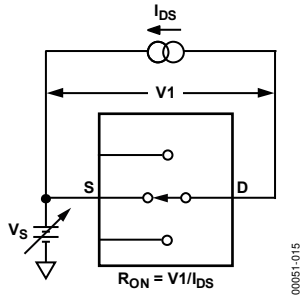

Figure 14. R_{ON}

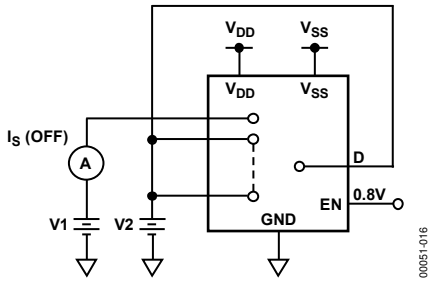

Figure 15. I_S (Off)

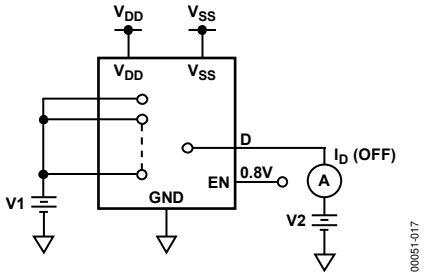

Figure 16. I_D (Off)

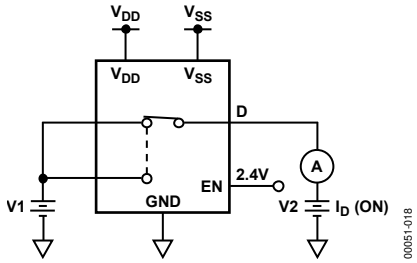

Figure 17. I_D (On)

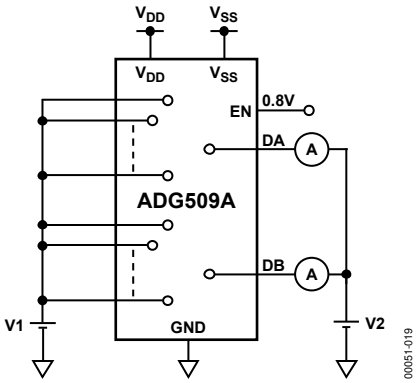

Figure 18. $I_{DIFF} = I_{DB}$ (Off)

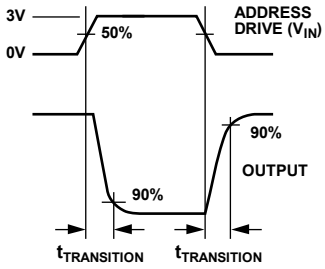

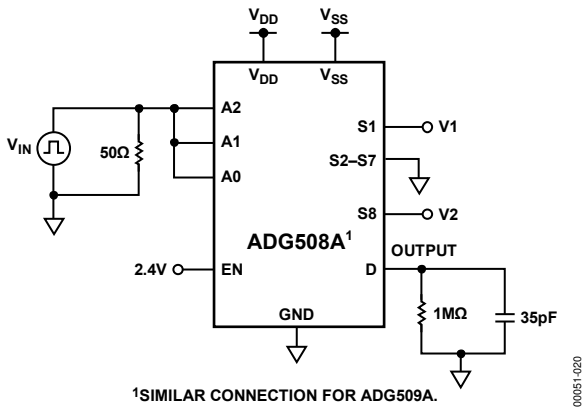

Figure 19. Switching Time of Multiplexer, $t_{TRANSITION}$

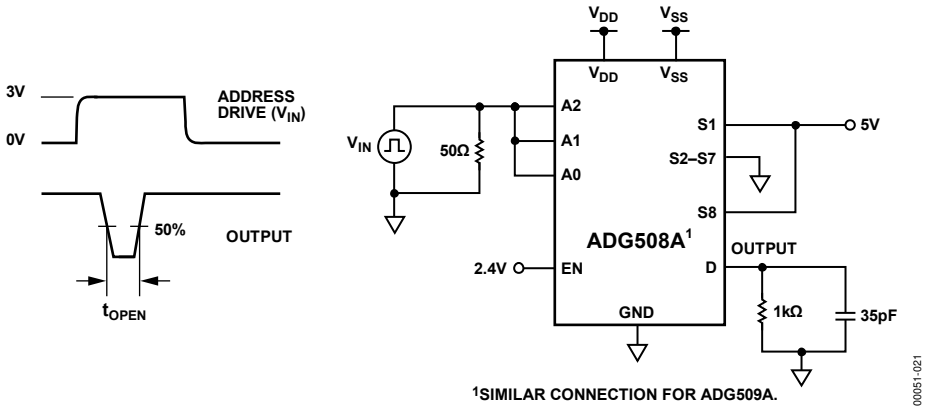

Figure 20. Break-Before-Make Delay, t_{OPEN}

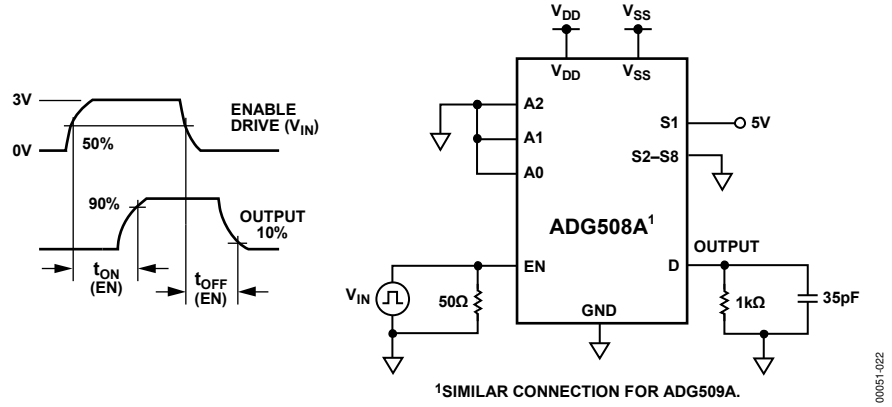

Figure 21. Enable Delay, t_{ON} (EN), t_{OFF} (EN)

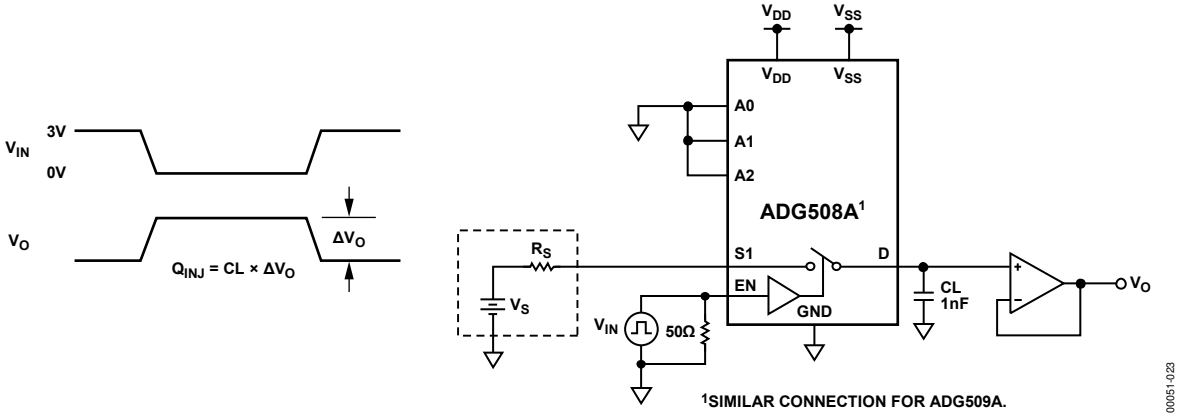

Figure 22. Charge Injection

SINGLE-SUPPLY OCTAL DAC APPLICATION

The following circuit shows the ADG508A connected as a demultiplexer to provide eight separate, digitally programmable voltages (0 V to 10 V) from the AD7245A. The AD7245A is a complete 12-bit, voltage output DAC with output amplifier and Zener voltage reference on a monolithic CMOS chip.

The entire system operates from a single 15 V power supply. The ADG508A is ideally suited for the application because it has both low charge injection and I_S (OFF) leakage current.

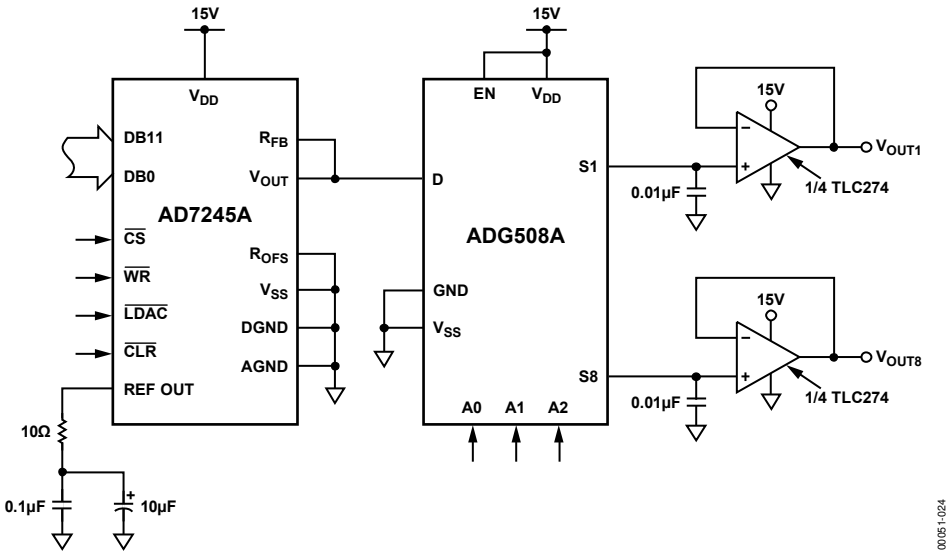

Figure 23. ADG508A in a Single-Supply Octal DAC Circuit

OUTLINE DIMENSIONS

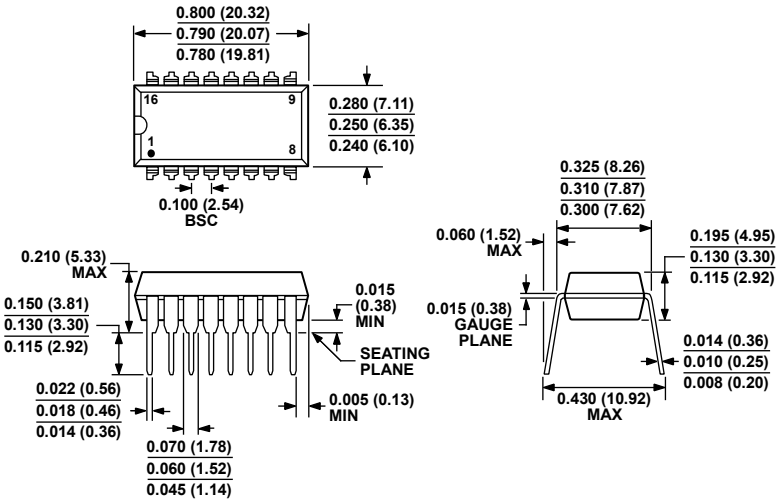

COMPLIANT TO JEDEC STANDARDS MS-001-AB

CONTROLLING DIMENSIONS ARE IN INCHES; MILLIMETER DIMENSIONS (IN PARENTHESES) ARE ROUNDED-OFF INCH EQUIVALENTS FOR REFERENCE ONLY AND ARE NOT APPROPRIATE FOR USE IN DESIGN. CORNER LEADS MAY BE CONFIGURED AS WHOLE OR HALF LEADS.

073106-B

Figure 24. 16-Lead Plastic Dual In-Line Package [PDIP]
Narrow Body (N-16)
Dimensions shown in inches and (millimeters)

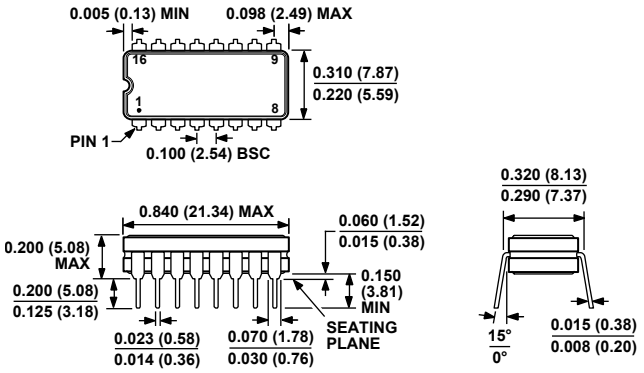

CONTROLLING DIMENSIONS ARE IN INCHES; MILLIMETER DIMENSIONS (IN PARENTHESES) ARE ROUNDED-OFF INCH EQUIVALENTS FOR REFERENCE ONLY AND ARE NOT APPROPRIATE FOR USE IN DESIGN.

Figure 25. 16-Lead Ceramic Dual In-Line Package [CERDIP]
(Q-16)
Dimensions shown in inches and (millimeters)

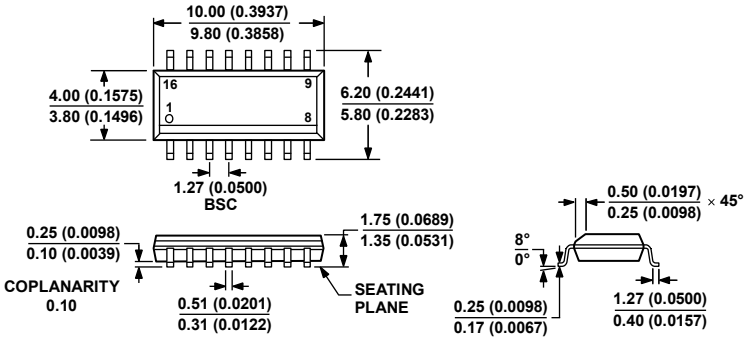

COMPLIANT TO JEDEC STANDARDS MS-012-AC
CONTROLLING DIMENSIONS ARE IN MILLIMETERS; INCH DIMENSIONS (IN PARENTHESES) ARE ROUNDED-OFF MILLIMETER EQUIVALENTS FOR REFERENCE ONLY AND ARE NOT APPROPRIATE FOR USE IN DESIGN.

060606-A

Figure 26. 16-Lead Standard Small Outline Package [SOIC_N]
Narrow Body (R-16)
Dimensions shown in millimeters and (inches)

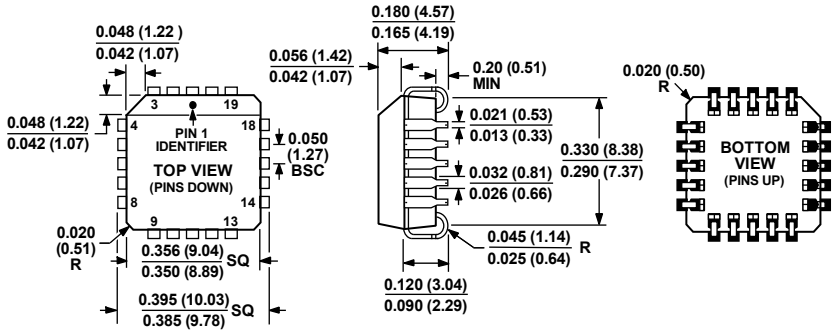

COMPLIANT TO JEDEC STANDARDS MO-047-AA
CONTROLLING DIMENSIONS ARE IN INCHES; MILLIMETER DIMENSIONS (IN PARENTHESES) ARE ROUNDED-OFF INCH EQUIVALENTS FOR REFERENCE ONLY AND ARE NOT APPROPRIATE FOR USE IN DESIGN.

Figure 27. 20-Lead Plastic Leaded Chip Carrier [PLCC]
(P-20)
Dimensions shown in inches and (millimeters)

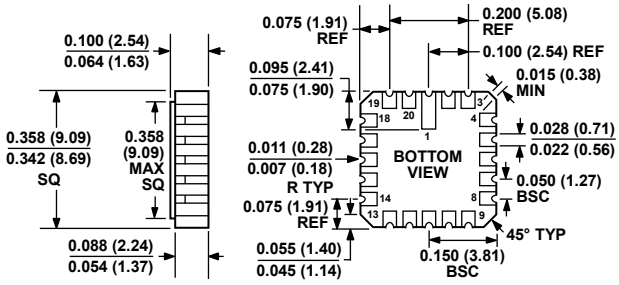

CONTROLLING DIMENSIONS ARE IN INCHES; MILLIMETER DIMENSIONS (IN PARENTHESES) ARE ROUNDED-OFF INCH EQUIVALENTS FOR REFERENCE ONLY AND ARE NOT APPROPRIATE FOR USE IN DESIGN.

022106-A

Figure 28. 20-Terminal Ceramic Leadless Chip Carrier [LCC]
(E-20-1)
Dimensions shown in inches and (millimeters)

ORDERING GUIDE

Model	Temperature Range	Package Description	Package Option
ADG508AKN	−40°C to +85°C	16-Lead Plastic Dual In-Line Package [PDIP]	N-16
ADG508AKNZ[1]	−40°C to +85°C	16-Lead Plastic Dual In-Line Package [PDIP]	N-16
ADG508AKR	−40°C to +85°C	16-Lead Standard Small Outline Package [SOIC_N]	R-16
ADG508AKR-REEL	−40°C to +85°C	16-Lead Standard Small Outline Package [SOIC_N]	R-16
ADG508AKR-REEL7	−40°C to +85°C	16-Lead Standard Small Outline Package [SOIC_N]	R-16
ADG508AKRZ[1]	−40°C to +85°C	16-Lead Standard Small Outline Package [SOIC_N]	R-16
ADG508AKRZ-REEL[1]	−40°C to +85°C	16-Lead Standard Small Outline Package [SOIC_N]	R-16
ADG508AKRZ-REEL7[1]	−40°C to +85°C	16-Lead Standard Small Outline Package [SOIC_N]	R-16
ADG508AKP	−40°C to +85°C	20-Lead Plastic Leaded Chip Carrier [PLCC]	P-20
ADG508AKP-REEL	−40°C to +85°C	20-Lead Plastic Leaded Chip Carrier [PLCC]	P-20
ADG508AKPZ[1]	−40°C to +85°C	20-Lead Plastic Leaded Chip Carrier [PLCC]	P-20
ADG508AKPZ-REEL[1]	−40°C to +85°C	20-Lead Plastic Leaded Chip Carrier [PLCC]	P-20
ADG508ABQ	−40°C to +85°C	16-Lead Ceramic Dual In-Line Package [CERDIP]	Q-16
ADG508ATQ	−55°C to +125°C	16-Lead Ceramic Dual In-Line Package [CERDIP]	Q-16
ADG508ATE	−55°C to +125°C	20-Terminal Ceramic Leadless Chip Carrier [LCC]	E-20-1
ADG508ABCHIPS		DIE	
ADG508ATCHIPS		DIE	
ADG509AKN	−40°C to +85°C	16-Lead Plastic Dual In-Line Package [PDIP]	N-16
ADG509AKNZ[1]	−40°C to +85°C	16-Lead Plastic Dual In-Line Package [PDIP]	N-16
ADG509AKR	−40°C to +85°C	16-Lead Standard Small Outline Package [SOIC_N]	R-16
ADG509AKR-REEL	−40°C to +85°C	16-Lead Standard Small Outline Package [SOIC_N]	R-16
ADG509AKR-REEL7	−40°C to +85°C	16-Lead Standard Small Outline Package [SOIC_N]	R-16
ADG509AKRZ-REEL[1]	−40°C to +85°C	16-Lead Standard Small Outline Package [SOIC_N]	R-16
ADG509AKRZ-REEL7[1]	−40°C to +85°C	16-Lead Standard Small Outline Package [SOIC_N]	R-16
ADG509AKP	−40°C to +85°C	20-Lead Plastic Leaded Chip Carrier [PLCC]	P-20
ADG509AKP-REEL	−40°C to +85°C	20-Lead Plastic Leaded Chip Carrier [PLCC]	P-20
ADG509AKPZ[1]	−40°C to +85°C	20-Lead Plastic Leaded Chip Carrier [PLCC]	P-20
ADG509AKPZ-REEL[1]	−40°C to +85°C	20-Lead Plastic Leaded Chip Carrier [PLCC]	P-20
ADG509ABQ	−40°C to +85°C	16-Lead Ceramic Dual In-Line Package [CERDIP]	Q-16
ADG509ATQ	−55°C to +125°C	16-Lead Ceramic Dual In-Line Package [CERDIP]	Q-16
ADG509ATQ/883B	−55°C to +125°C	16-Lead Ceramic Dual In-Line Package [CERDIP]	Q-16
ADG509ABCHIPS		DIE	
ADG509ATCHIPS		DIE	

[1] Z = RoHS Compliant Part.

©2009 Analog Devices, Inc. All rights reserved. Trademarks and registered trademarks are the property of their respective owners.
D00051-0-7/09(D)