ADNS-5100/ADNS-5100-001
Solid-State Optical Mouse Lens

Data Sheet

Description

The ADNS-5100 and ADNS-5100-001 Solid-State Optical Mouse Lenses are designed for use with the ADNS-5XXX series of Avago Technologies Optical Mouse Sensors. The optical system is completed with the illumination subsystem provided by the ADNS-5200 LED Assembly Clip and the HLMP-ED80-XX000 LED. Together with the LED, the ADNS-5100 and ADNS-5100-001 provides the directed illumination and optical imaging necessary for proper operation of the Optical Mouse Sensor. The lenses are precision molded optical components and should be handled with care to avoid scratching of the optical surfaces.

Ordering Information

Specify Part Number as follows:

Flange	Part Number	Material
Round	ADNS-5100	Polycarbonate or Polystyrene HH30
Trim	ADNS-5100-001	Polycarbonate or Polystyrene HH30

Outline Drawings Including Markings and Logos

ADNS-5100

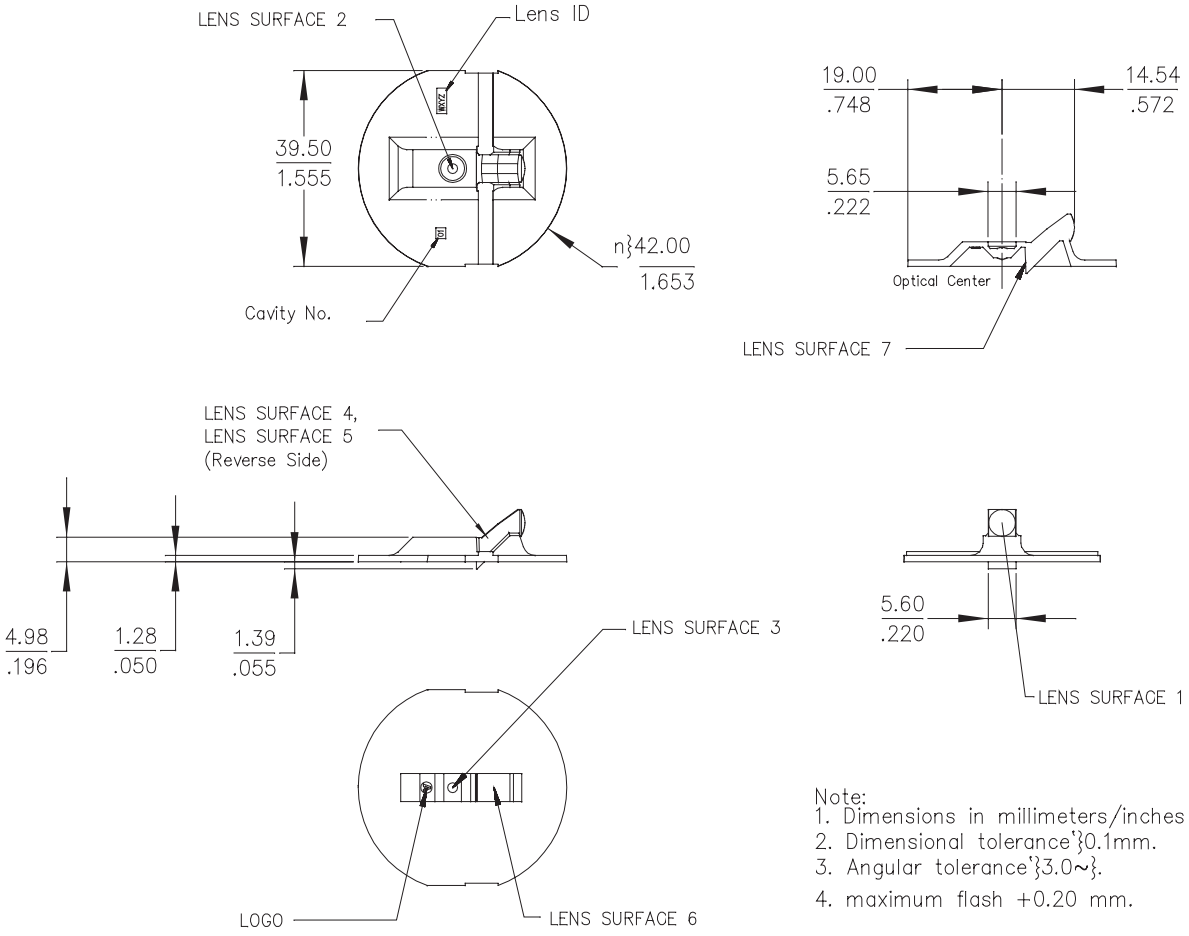

Figure 1. ADNS-5100 Solid State Optical Mouse Round Lens outline drawing and detail

Outline Drawings Including Markings and Logos

ADNS-5100-001

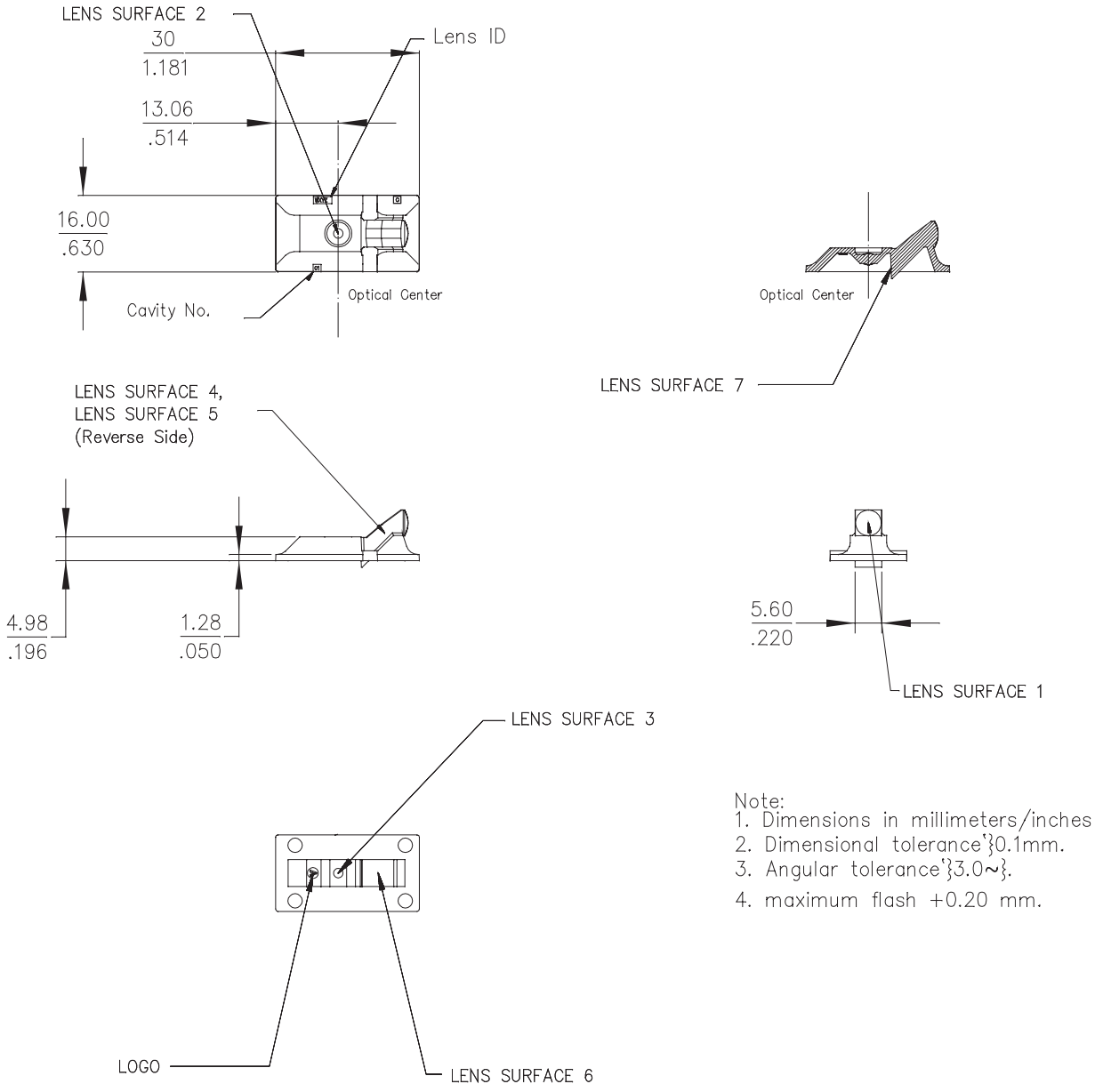

Figure 2. ADNS-5100-001 Solid State Optical Mouse Trim Lens outline drawing and detail

Mechanical Assemble Requirements

All specifications reference Figure 3, Optical System Assembly Diagram

	Symbol	Min.	Typical	Max.	Units	Conditions
Distance from Object Surface to Lens Reference Plane	A	2.3	2.4	2.5	mm	
Distance from Mouse Sensor Lid contact with lens Surface to Object Surface	B		7.38		mm	Sensor lid must be in contact with lens housing surface

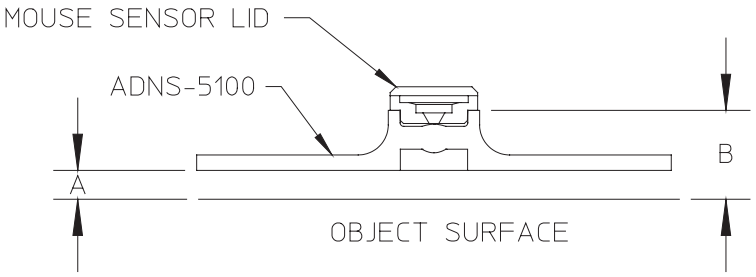

Figure 3. Optical System Assembly Diagram

Lens Design Optical Performance Specifications

All specifications are based on the Mechanical Assembly Requirements.

	Symbol	Min.	Typical	Max.	Units	Conditions
Numerical Aperture	NA	0.1	0.13	0.16		
Magnification			1.25			Image at nominal location
Design Wavelength			639		nm	
Object to Image Distance			8.83		mm	
Lens Material*Index of Refraction	N	1.580	1.582	1.5840		λ = 639nm
Depth of Field	DOF		±0.5		mm	
Die Coverage Radius			0.6		mm	

*Lens material is polycarbonate or polystyrene HH30, therefore, cyanoacrylate based adhesives should not be used as they will cause lens material deformation.

Mounting Instructions for the ADNS-5100 Lens to the Base Plate

An IGES format drawing file with design specifications for mouse base plate features is available.

Note :- Stand-off of the base plate shall not be larger than 5mm as lens surface 7 size is 5.60mm."

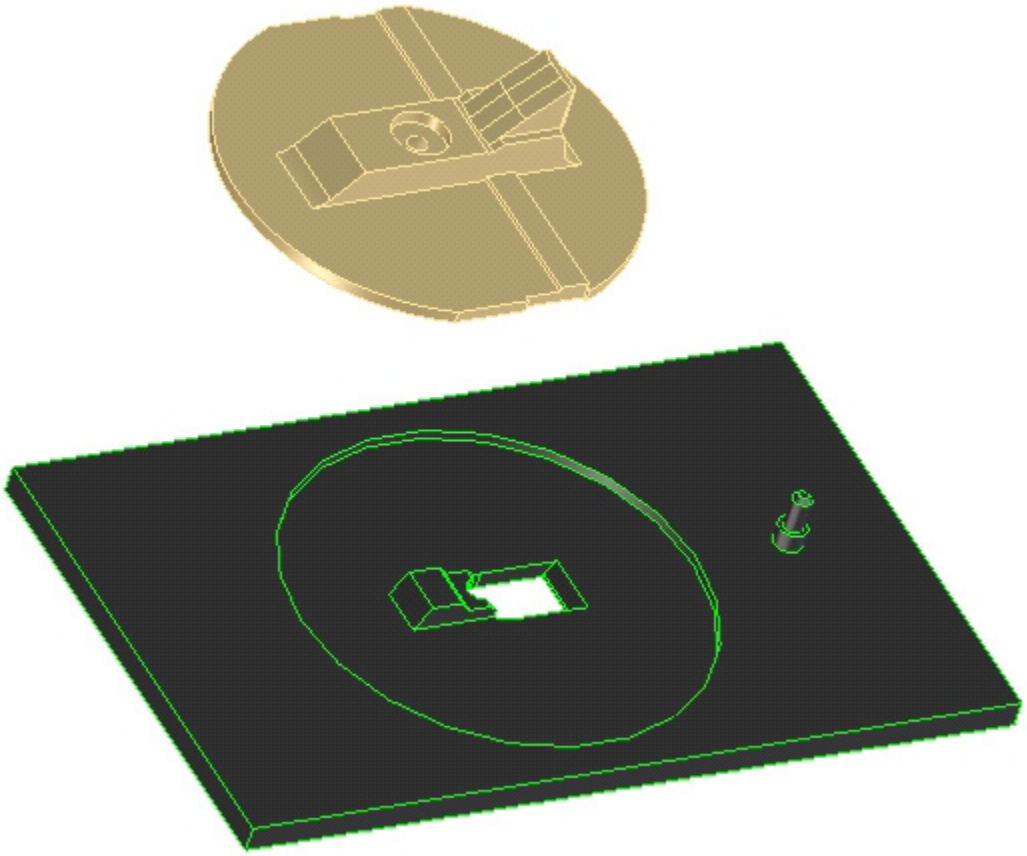

Figure 4. Illustration of base plate mounting features

These features are useful in maintaining proper positioning and alignment of the ADNS-5100 when used with the Avago Technologies Optical Mouse Sensor. This file can be obtained by contacting your local Avago Technologies sales representative.

Avago, Avago Technologies, and the A logo are trademarks of Avago Technologies, Limited in the United States and other countries.
Data subject to change. Copyright © 2007 Avago Technologies Limited. All rights reserved. Obsoletes AV01-0086EN
AV02-0115EN - July 31, 2007