18-BIT, 1-MSPS, PSEUDO-DIFFERENTIAL UNIPOLAR INPUT, MICROPOWER SAMPLING ANALOG-TO-DIGITAL CONVERTER WITH PARALLEL INTERFACE AND REFERENCE

FEATURES

- **0 to 1 MSPS Sampling Rate**
- **18-Bit NMC Ensured Over Temperature**
- **Low ±0.1 mV Offset Error**
- **Low 0.2 ppm/°C Offset Error Temperature Drift**
- **Low 0.6 ppm/°C Gain Error Temperature Drift**
- **Zero Latency**
- **Low Power: 220 mW at 1 MSPS**
- **Unipolar Single-Ended Input Range: 0 V to V_{ref}**
- **Onboard Reference**
- **Onboard Reference Buffer**
- **High-Speed Parallel Interface**
- **Wide Digital Supply 2.7 V ~ 5.25 V**
- **8-/16-/18-Bit Bus Transfer**
- **7x7 QFN Package**

APPLICATIONS

- **Medical Instruments**
- **Optical Networking**
- **Transducer Interface**
- **High Accuracy Data Acquisition Systems**
- **Magnetometers**

DESCRIPTION

The ADS8481 is an 18-bit, 1-MSPS A/D converter with an internal 4.096-V reference and a pseudo-differential unipolar single-ended input. The device includes a 18-bit capacitor-based SAR A/D converter with inherent sample and hold. The ADS8481 offers a full 18-bit interface, a 16-bit option where data is read using two read cycles, or an 8-bit bus option using three read cycles.

The ADS8481 is available in a 7x7 QFN package and is characterized over the industrial –40°C to 85°C temperature range.

HIGH SPEED SAR CONVERTER FAMILY

TYPE/SPEED	500 kHz	580 kHz	750 kHz	1 MHz	1.25 MHz	2 MHz	3 MHz	4MHz
18-Bit Pseudo-Diff	ADS8383	ADS8381		ADS8481				
		ADS8380(S)						
18-Bit Pseudo-Bipolar, Fully Diff		ADS8382(S)		ADS8482				
16-Bit Pseudo-Diff			ADS8371	ADS8471	ADS8401	ADS8411		
					ADS8405			
16-Bit Pseudo-Bipolar, Fully Diff				ADS8472	ADS8402	ADS8412		
					ADS8406			
14-Bit Pseudo-Diff					ADS7890 (s)		ADS7891	
12-Bit Pseudo-Diff				ADS7886		ADS7883		ADS7881

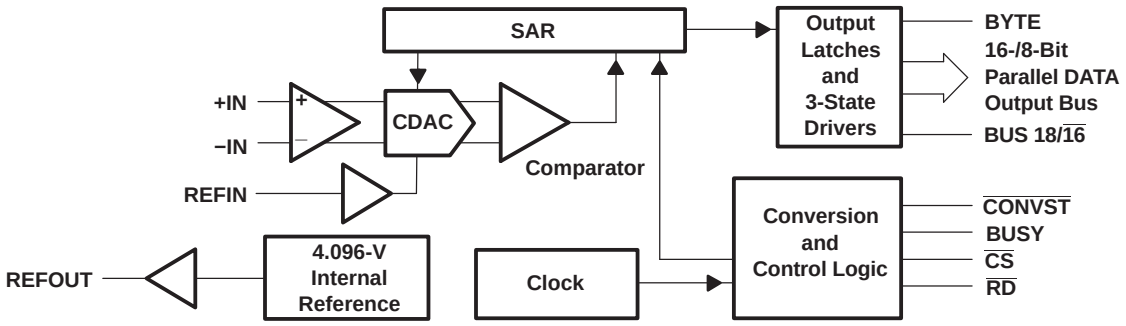

Please be aware that an important notice concerning availability, standard warranty, and use in critical applications of Texas Instruments semiconductor products and disclaimers thereto appears at the end of this data sheet.

PRODUCTION DATA information is current as of publication date. Products conform to specifications per the terms of the Texas Instruments standard warranty. Production processing does not necessarily include testing of all parameters.

Copyright © 2006, Texas Instruments Incorporated

These devices have limited built-in ESD protection. The leads should be shorted together or the device placed in conductive foam during storage or handling to prevent electrostatic damage to the MOS gates.

ORDERING INFORMATION(1)

MODEL	MAXIMUM INTEGRAL LINEARITY (LSB)	MAXIMUM DIFFERENTIAL LINEARITY (LSB)	NO MISSING CODES RESOLUTION (BIT)	PACKAGE TYPE	PACKAGE DESIGNATOR	TEMPER-ATURE RANGE	ORDERING INFORMATION	TRANS-PORT MEDIA QTY.
ADS8481I	±5	–1 to +2.5	18	7x7 48 Pin QFN	RGZ	–40°C to 85°C	ADS8482IRGZT	Tape and reel 250
							ADS8481IRGZR	Tape and reel 1000
ADS8481IB	±3.5	–1 to +1.5	18	7x7 48 Pin QFN	RGZ	–40°C to 85°C	ADS8481IBRGZT	Tape and reel 250
							ADS8481IBRGZR	Tape and reel 1000

(1) For the most current specifications and package information, refer to our website at www.ti.com.

ABSOLUTE MAXIMUM RATINGS(1)

over operating free-air temperature range (unless otherwise noted)

			VALUE	UNIT
	Voltage	+IN to AGND	–0.4 to +VA + 0.1	V
		–IN to AGND	–0.4 to 0.5	V
		+VA to AGND	–0.3 to 7	V
		+VBD to BDGND	–0.3 to 7	V
		+VA to +VBD	–0.3 to 2.55	V
	Digital input voltage to BDGND		–0.3 to +VBD + 0.3	V
	Digital output voltage to BDGND		–0.3 to +VBD + 0.3	V
T_A	Operating free-air temperature range		–40 to 85	°C
T_{stg}	Storage temperature range		–65 to 150	°C
	Junction temperature (T_J max)		150	°C
	QFN package	Power dissipation	$(T_J Max – T_A)/\theta_{JA}$	
		θ_{JA} thermal impedance	22	°C/W
	Lead temperature, soldering	Vapor phase (60 sec)	215	°C
		Infrared (15 sec)	220	°C

(1) Stresses beyond those listed under *absolute maximum ratings* may cause permanent damage to the device. These are stress ratings only, and functional operation of the device at these or any other conditions beyond those indicated under *recommended operating conditions* is not implied. Exposure to absolute-maximum-rated conditions for extended periods may affect device reliability.

SPECIFICATIONS

T_A = –40°C to 85°C, +VA = 5 V, +VBD = 3 V or 5 V, V_{ref} = 4.096 V, f_{SAMPLE} = 1 MSPS (unless otherwise noted)

PARAMETER		TEST CONDITIONS	MIN	TYP	MAX	UNIT
ANALOG INPUT						
Full-scale input voltage(1)		+IN – (–IN)	0		V_{ref}	V
Absolute input voltage		+IN	–0.2		V_{ref} +0.2	V
		–IN	–0.2		0.2	
Input capacitance				65		pF
Input leakage current				1		nA
SYSTEM PERFORMANCE						
Resolution			18			Bits
No missing codes	ADS8481I		18	18		Bits
	ADS8481IB		18			
Integral linearity(2)(3)	ADS8481I		–5	–1.5/+1.9	5	LSB (18 bit)
	ADS8481IB		–3.5	–1.5/+1.9	3.5	
Differential linearity	ADS8481I		–1	–0.5/+0.7	2.5	LSB (18 bit)
	ADS8481IB		–1	–0.5/+0.7	1.5	
Offset error(4)	ADS8481I		–0.5	±0.1	0.5	mV
	ADS8481IB		–0.5	±0.1	0.5	
Offset error temperature drift				±0.2		ppm/°C
Gain error(4)(5)	ADS8481I	V_{ref} = 4.096 V	–0.075	±0.05	0.075	%FS
	ADS8481IB	V_{ref} = 4.096 V	–0.075	±0.05	0.075	%FS
Gain error temperature drift				±0.6		ppm/°C
Noise				30		µV RMS
Power supply rejection ratio		At 3FFFFh output code		60		dB
SAMPLING DYNAMICS						
Conversion time				650	710	ns
Acquisition time			250			ns
Throughput rate					1	MHz
Aperture delay				4		ns
Aperture jitter				5		ps
Step response				150		ns
Over voltage recovery				150		ns

(1) Ideal input span, does not include gain or offset error.
(2) LSB means least significant bit
(3) This is endpoint INL, not best fit.
(4) Measured relative to an ideal full-scale input [+IN – (–IN)] of 4.096 V
(5) This specification does not include the internal reference voltage error and drift.

SPECIFICATIONS (Continued)

T_A = –40°C to 85°C, +VA = 5 V, +VBD = 3 V or 5 V, V_{ref} = 4.096 V, f_{SAMPLE} = 1 MSPS (unless otherwise noted)

PARAMETER		TEST CONDITIONS	MIN	TYP	MAX	UNIT
DYNAMIC CHARACTERISTICS						
Total harmonic distortion (THD)(1)	ADS8481I	V_{IN} = 4 V_{pp} at 1 kHz		–110		dB
	ADS8481IB			–112		
	ADS8481I	V_{IN} = 4 V_{pp} at 10 kHz		–106		
	ADS8481IB			–108		
	ADS8481I	V_{IN} = 4 V_{pp} at 100 kHz		–98		
	ADS8481IB			–99		
Signal to noise ratio (SNR)(1)	ADS8481I	V_{IN} = 4 V_{pp} at 1 kHz		92		dB
	ADS8481IB			94		
	ADS8481I	V_{IN} = 4 V_{pp} at 10 kHz		91		
	ADS8481IB			93		
	ADS8481I	V_{IN} = 4 V_{pp} at 100 kHz		90		
	ADS8481IB			92		
Signal to noise + distortion (SINAD)(1)	ADS8481I	V_{IN} = 4 V_{pp} at 1 kHz		91		dB
	ADS8481IB			93		
	ADS8481I	V_{IN} = 4 V_{pp} at 10 kHz		90		
	ADS8481IB			92		
	ADS8481I	V_{IN} = 4 V_{pp} at 100 kHz		89		
	ADS8481IB			91		
Spurious free dynamic range (SFDR)(1)	ADS8481I	V_{IN} = 4 V_{pp} at 1 kHz		110		dB
	ADS8481IB			112		
	ADS8481I	V_{IN} = 4 V_{pp} at 10 kHz		108		
	ADS8481IB			107		
	ADS8481I	V_{IN} = 4 V_{pp} at 100 kHz		98		
	ADS8481IB			98		
–3dB Small signal bandwidth				15		MHz
VOLTAGE REFERENCE INPUT						
Reference voltage at REFIN, Vref			3.0	4.096	4.2	V
Reference resistance(2)				500		kΩ
Reference current drain		f_s = 1 MHz			1	mA

(1) Calculated on the first nine harmonics of the input frequency.
(2) Can vary ±20%

SPECIFICATIONS (Continued)

T_A = –40°C to 85°C, +VA = 5 V, +VBD = 3 V or 5 V, V_{ref} = 4.096 V, f_{SAMPLE} = 1 MSPS (unless otherwise noted)

PARAMETER		TEST CONDITIONS	MIN	TYP	MAX	UNIT
INTERNAL REFERENCE OUTPUT						
Internal reference start-up time		From 95% (+VA), with 1-µF storage capacitor			120	ms
Reference voltage range, V_{ref}		I_O = 0 A	4.081	4.096	4.111	V
Source current		Static load			10	µA
Line regulation		+VA = 4.75 V to 5.25 V		60		µV
Drift		I_O = 0 A		±6		PPM/C
DIGITAL INPUT/OUTPUT						
Logic family – CMOS						
Logic level	V_{IH}	I_{IH} = 5 µA	+VBD–1		$+V_{BD}$ +0.3	V
	V_{IL}	I_{IL} = 5 µA	–0.3		0.8	
	V_{OH}	I_{OH} = 2 TTL loads	$+V_{BD}$– 0.6			
	V_{OL}	I_{OL} = 2 TTL loads			0.4	
Data format – Straight Binary						
POWER SUPPLY REQUIREMENTS						
Power supply voltage	+VBD		2.7	3.3	5.25	V
	+VA		4.75	5	5.25	V
Supply current(1)		f_s = 1 MHz		44	48	mA
Power dissipation(1)		f_s = 1 MHz		220	240	mW
TEMPERATURE RANGE						
Operating free-air			–40		85	°C

(1) This includes only +VA current. +VBD current is typical 1 mA with 5 pF load capacitance on all output pins.

TIMING CHARACTERISTICS

All specifications typical at –40°C to 85°C, +VA =+VBD = 5 V (1)(2)(3)

PARAMETER		MIN	TYP	MAX	UNIT
$t_{(CONV)}$	Conversion time			710	ns
$t_{(ACQ)}$	Acquisition time	250			ns
$t_{(HOLD)}$	Sample capacitor hold time			25	ns
t_{pd1}	$\overline{CONVST}$ low to BUSY high			40	ns
t_{pd2}	Propagation delay time, end of conversion to BUSY low			15	ns
t_{pd3}	Propagation delay time, start of convert state to rising edge of BUSY			15	ns
t_{w1}	Pulse duration, $\overline{CONVST}$ low	40			ns
t_{su1}	Setup time, $\overline{CS}$ low to $\overline{CONVST}$ low	20			ns
t_{w2}	Pulse duration, $\overline{CONVST}$ high	20			ns
	$\overline{CONVST}$ falling edge jitter			10	ps
t_{w3}	Pulse duration, BUSY signal low	$t_{(ACQ)}$min			ns
t_{w4}	Pulse duration, BUSY signal high			710	ns
t_{h1}	Hold time, first data bus transition ($\overline{RD}$ low, or $\overline{CS}$ low for read cycle, or BYTE or BUS18/$\overline{16}$ input changes) after $\overline{CONVST}$ low	40			ns
t_{d1}	Delay time, $\overline{CS}$ low to $\overline{RD}$ low	0			ns
t_{su2}	Setup time, $\overline{RD}$ high to $\overline{CS}$ high	0			ns
t_{w5}	Pulse duration, $\overline{RD}$ low	50			ns
t_{en}	Enable time, $\overline{RD}$ low (or $\overline{CS}$ low for read cycle) to data valid			20	ns
t_{d2}	Delay time, data hold from $\overline{RD}$ high	5			ns
t_{d3}	Delay time, BUS18/$\overline{16}$ or BYTE rising edge or falling edge to data valid	10		20	ns
t_{w6}	Pulse duration, $\overline{RD}$ high	20			ns
t_{w7}	Pulse duration, $\overline{CS}$ high	20			ns
t_{h2}	Hold time, last $\overline{RD}$ (or $\overline{CS}$ for read cycle) rising edge to $\overline{CONVST}$ falling edge	50			ns
t_{pd4}	Propagation delay time, BUSY falling edge to next $\overline{RD}$ (or $\overline{CS}$ for read cycle) falling edge	0			ns
t_{d4}	Delay time, BYTE edge to BUS18/$\overline{16}$ edge skew	0			ns
t_{su3}	Setup time, BYTE or BUS18/$\overline{16}$ transition to $\overline{RD}$ falling edge	10			ns
t_{h3}	Hold time, BYTE or BUS18/$\overline{16}$ transition to $\overline{RD}$ falling edge	10			ns
t_{dis}	Disable time, $\overline{RD}$ high ($\overline{CS}$ high for read cycle) to 3-stated data bus			20	ns
t_{d5}	Delay time, BUSY low to MSB data valid delay			0	ns
t_{d6}	Delay time, $\overline{CS}$ rising edge to BUSY falling edge	50			ns
t_{d7}	Delay time, BUSY falling edge to $\overline{CS}$ rising edge	50			ns
t_{su5}	BYTE transition setup time, from BYTE transition to next BYTE transition, or BUS18/$\overline{16}$ transition setup time, from BUS18/$\overline{16}$ to next BUS18/$\overline{16}$.	50			ns
$t_{su(ABORT)}$	Setup time from the falling edge of $\overline{CONVST}$ (used to start the valid conversion) to the next falling edge of $\overline{CONVST}$ (when CS = 0 and $\overline{CONVST}$ are used to abort) or to the next falling edge of $\overline{CS}$ (when $\overline{CS}$ is used to abort).	60		610	ns

(1) All input signals are specified with $t_r = t_f = 5$ ns (10% to 90% of +VBD) and timed from a voltage level of $(V_{IL} + V_{IH})/2$.
(2) See timing diagrams.
(3) All timing are measured with 20-pF equivalent loads on all data bits and BUSY pins.

TIMING CHARACTERISTICS

All specifications typical at –40°C to 85°C, +VA = 5 V +VBD = 3 V [(1)(2)(3)]

	PARAMETER	MIN	TYP	MAX	UNIT
$t_{(CONV)}$	Conversion time			710	ns
$t_{(ACQ)}$	Acquisition time	250			ns
$t_{(HOLD)}$	Sample capacitor hold time			25	ns
t_{pd1}	$\overline{CONVST}$ low to BUSY high			40	ns
t_{pd2}	Propagation delay time, end of conversion to BUSY low			25	ns
t_{pd3}	Propagation delay time, start of convert state to rising edge of BUSY			25	ns
t_{w1}	Pulse duration, $\overline{CONVST}$ low	40			ns
t_{su1}	Setup time, $\overline{CS}$ low to $\overline{CONVST}$ low	20			ns
t_{w2}	Pulse duration, CONVST high	20			ns
	$\overline{CONVST}$ falling edge jitter			10	ps
t_{w3}	Pulse duration, BUSY signal low	$t_{(ACQ)}$min			ns
t_{w4}	Pulse duration, BUSY signal high			710	ns
t_{h1}	Hold time, first data bus transition ($\overline{RD}$ low, or $\overline{CS}$ low for read cycle, or BYTE or BUS18/$\overline{16}$ input changes) after $\overline{CONVST}$ low	40			ns
t_{d1}	Delay time, $\overline{CS}$ low to $\overline{RD}$ low	0			ns
t_{su2}	Setup time, $\overline{RD}$ high to $\overline{CS}$ high	0			ns
t_{w5}	Pulse duration, $\overline{RD}$ low	50			ns
t_{en}	Enable time, $\overline{RD}$ low (or $\overline{CS}$ low for read cycle) to data valid			30	ns
t_{d2}	Delay time, data hold from $\overline{RD}$ high	5			ns
t_{d3}	Delay time, BUS18/$\overline{16}$ or BYTE rising edge or falling edge to data valid	10		30	ns
t_{w6}	Pulse duration, $\overline{RD}$ high	20			ns
t_{w7}	Pulse duration, $\overline{CS}$ high	20			ns
t_{h2}	Hold time, last $\overline{RD}$ (or $\overline{CS}$ for read cycle) rising edge to $\overline{CONVST}$ falling edge	50			ns
t_{pd4}	Propagation delay time, BUSY falling edge to next $\overline{RD}$ (or $\overline{CS}$ for read cycle) falling edge	0			ns
t_{d4}	Delay time, BYTE edge to BUS18/$\overline{16}$ edge skew	0			ns
t_{su3}	Setup time, BYTE or BUS18/$\overline{16}$ transition to $\overline{RD}$ falling edge	10			ns
t_{h3}	Hold time, BYTE or BUS18/$\overline{16}$ transition to $\overline{RD}$ falling edge	10			ns
t_{dis}	Disable time, $\overline{RD}$ high ($\overline{CS}$ high for read cycle) to 3-stated data bus			30	ns
t_{d5}	Delay time, BUSY low to MSB data valid delay			0	ns
t_{d6}	Delay time, $\overline{CS}$ rising edge to BUSY falling edge	50			ns
t_{d7}	Delay time, BUSY falling edge to $\overline{CS}$ rising edge	50			ns
t_{su5}	BYTE transition setup time, from BYTE transition to next BYTE transition, or BUS18/$\overline{16}$ transition setup time, from BUS18/$\overline{16}$ to next BUS18/$\overline{16}$.	50			ns
$t_{su(ABORT)}$	Setup time from the falling edge of $\overline{CONVST}$ (used to start the valid conversion) to the next falling edge of $\overline{CONVST}$ (when CS = 0 and $\overline{CONVST}$ are used to abort) or to the next falling edge of $\overline{CS}$ (when $\overline{CS}$ is used to abort).	70		620	ns

(1) All input signals are specified with $t_r = t_f = 5$ ns (10% to 90% of +VBD) and timed from a voltage level of $(V_{IL} + V_{IH})/2$.
(2) See timing diagrams.
(3) All timing are measured with 20-pF equivalent loads on all data bits and BUSY pins.

PIN ASSIGNMENTS

RGZ PACKAGE
(TOP VIEW)

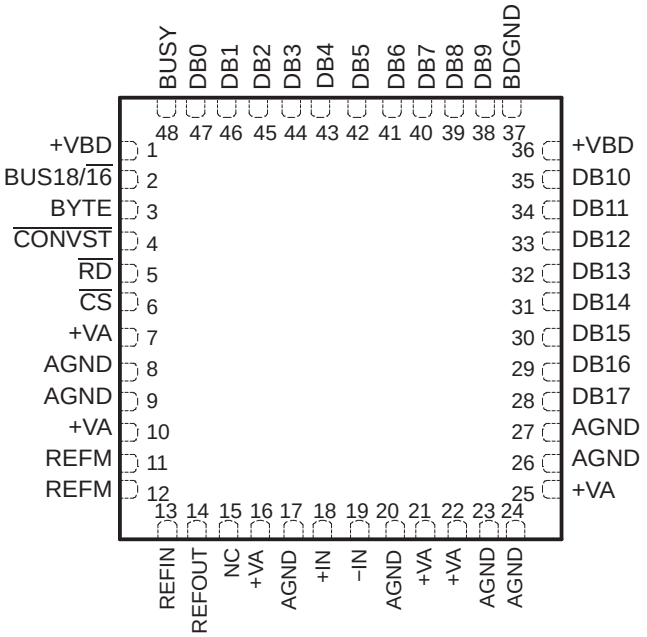

NC − No internal connection

NOTE: The package thermal pad must be soldered to the printed circuit board for thermal and mechanical performance.

PIN ASSIGNMENTS (continued)

TERMINAL FUNCTIONS

NAME	NO RGZ	I/O	DESCRIPTION
AGND	8, 9, 17, 20, 23, 24, 26, 27	–	Analog ground
BDGND	37	–	Digital ground for bus interface digital supply
BUSY	48	O	Status output. High when a conversion is in progress.
BUS18/$\overline{16}$	2	I	Bus size select input. Used for selecting 18-bit or 16-bit wide bus transfer. 0: Data bits output on the 18-bit data bus pins DB[17:0]. 1: Last two data bits D[1:0] from 18-bit wide bus output on: a) the low byte pins DB[9:2] if BYTE = 0 b) the high byte pins DB[17:10] if BYTE = 1
BYTE	3	I	Byte select input. Used for 8-bit bus reading. 0: No fold back 1: Low byte D[9:2] of the 16 most significant bits is folded back to high byte of the 16 most significant pins DB[17:10].
$\overline{\text{CONVST}}$	4	I	Convert start. The falling edge of this input ends the acquisition period and starts the hold period.
$\overline{\text{CS}}$	6	I	Chip select. The falling edge of this input starts the acquisition period.

Data Bus			8-BIT BUS			16-BIT BUS		18-BIT BUS
			BYTE = 0	BYTE = 1	BYTE = 1	BYTE = 0	BYTE = 0	BYTE = 0
			BUS18/$\overline{16}$ = 0	BUS18/$\overline{16}$ = 0	BUS18/$\overline{16}$ = 1	BUS18/$\overline{16}$ = 0	BUS18/$\overline{16}$ = 1	BUS18/$\overline{16}$ = 0
DB17	28	O	D17 (MSB)	D9	All ones	D17 (MSB)	All ones	D17 (MSB)
DB16	29	O	D16	D8	All ones	D16	All ones	D16
DB15	30	O	D15	D7	All ones	D15	All ones	D15
DB14	31	O	D14	D6	All ones	D14	All ones	D14
DB13	32	O	D13	D5	All ones	D13	All ones	D13
DB12	33	O	D12	D4	All ones	D12	All ones	D12
DB11	34	O	D11	D3	D1	D11	All ones	D11
DB10	35	O	D10	D2	D0 (LSB)	D10	All ones	D10
DB9	38	O	D9	All ones	All ones	D9	All ones	D9
DB8	39	O	D8	All ones	All ones	D8	All ones	D8
DB7	40	O	D7	All ones	All ones	D7	All ones	D7
DB6	41	O	D6	All ones	All ones	D6	All ones	D6
DB5	42	O	D5	All ones	All ones	D5	All ones	D5
DB4	43	O	D4	All ones	All ones	D4	All ones	D4
DB3	44	O	D3	All ones	All ones	D3	D1	D3
DB2	45	O	D2	All ones	All ones	D2	D0 (LSB)	D2
DB1	46	O	D1	All ones	All ones	D1	All ones	D1
DB0	47	O	D0 (LSB)	All ones	All ones	D0 (LSB)	All ones	D0 (LSB)

–IN	19	I	Inverting input channel
+IN	18	I	Noninverting input channel
NC	15		No connection
REFIN	13	I	Reference input
REFOUT	14	O	Reference output. Add 1-µF capacitor between the REFOUT pin and REFM pin when internal reference is used.
REFM	11, 12	I	Reference ground
$\overline{\text{RD}}$	5	I	Synchronization pulse for the parallel output. When $\overline{\text{CS}}$ is low, this serves as output enable and puts the previous conversion results on the bus.
+VA	7, 10, 16, 21, 22, 25	–	Analog power supplies, 5-V DC
+VBD	1, 36	–	Digital power supply for bus

TYPICAL CHARACTERISTICS

DC HISTOGRAM (8192 Conversion Outputs)

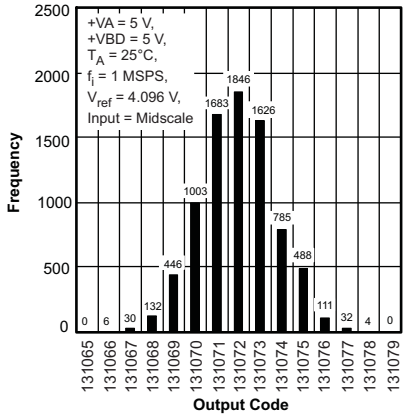

Figure 1.

INTERNAL REFERENCE VOLTAGE vs FREE-AIR TEMPERATURE

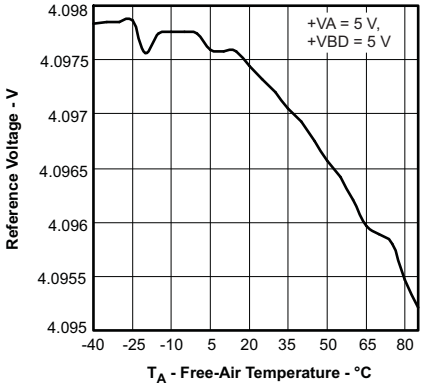

Figure 2.

INTERNAL REFERENCE VOLTAGE vs SUPPLY VOLTAGE

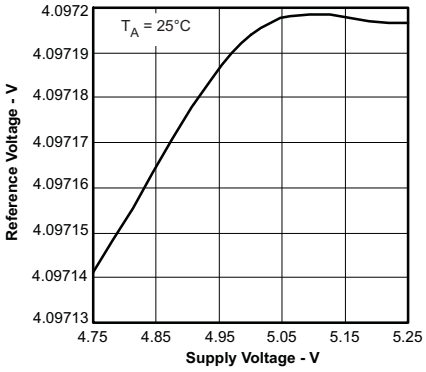

Figure 3.

SUPPLY CURRENT vs FREE-AIR TEMPERATURE

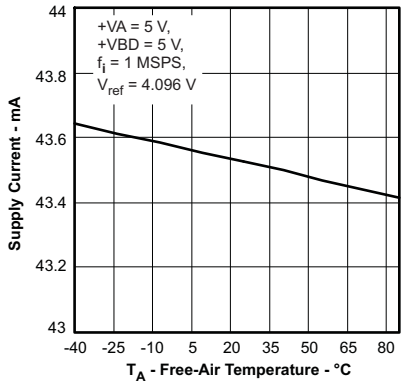

Figure 4.

SUPPLY CURRENT vs SUPPLY VOLTAGE

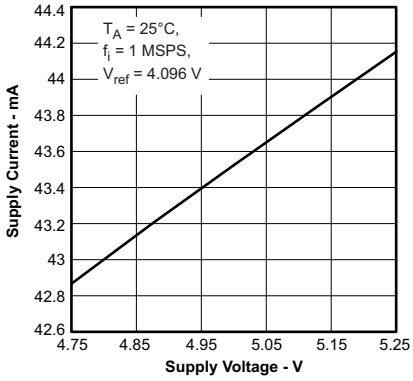

Figure 5.

SUPPLY CURRENT vs SAMPLE RATE

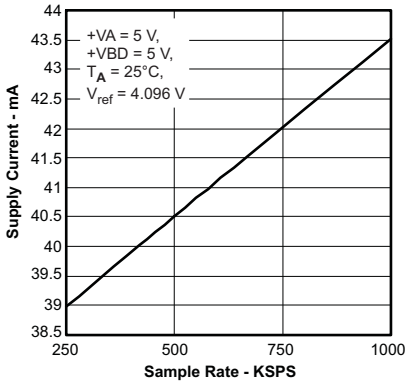

Figure 6.

DIFFERENTIAL NONLINEARITY vs FREE-AIR TEMPERATURE

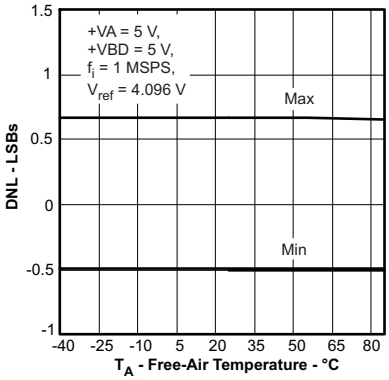

Figure 7.

INTEGRAL NONLINEARITY vs FREE-AIR TEMPERATURE

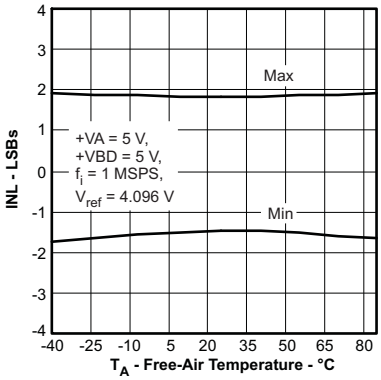

Figure 8.

DIFFERENTIAL NONLINEARITY vs SUPPLY VOLTAGE

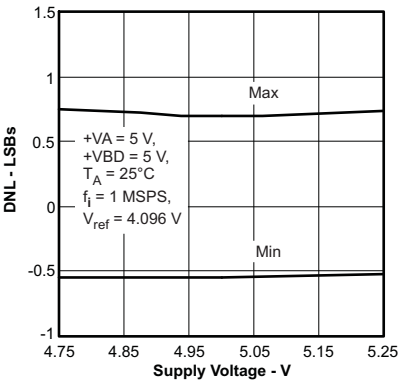

Figure 9.

TYPICAL CHARACTERISTICS (continued)

INTEGRAL NONLINEARITY vs SUPPLY VOLTAGE

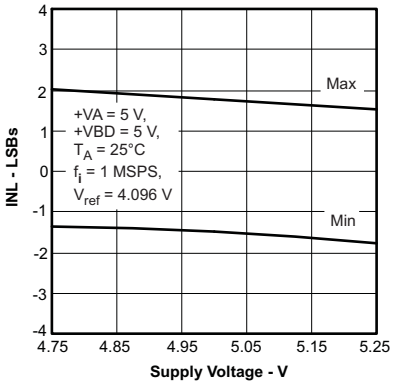

Figure 10.

DIFFERENTIAL NONLINEARITY vs REFERENCE VOLTAGE

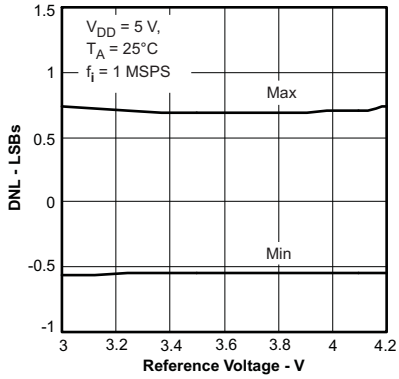

Figure 11.

INTEGRAL NONLINEARITY vs REFERENCE VOLTAGE

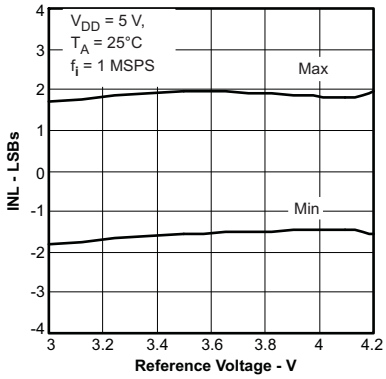

Figure 12.

OFFSET ERROR vs FREE-AIR TEMPERATURE

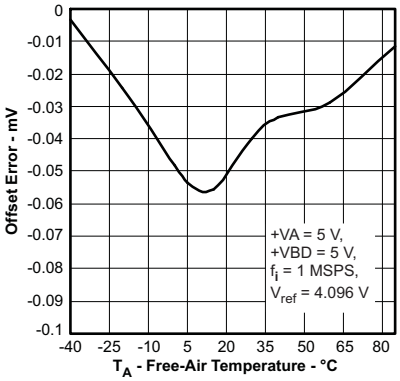

Figure 13.

OFFSET ERROR vs SUPPLY VOLTAGE

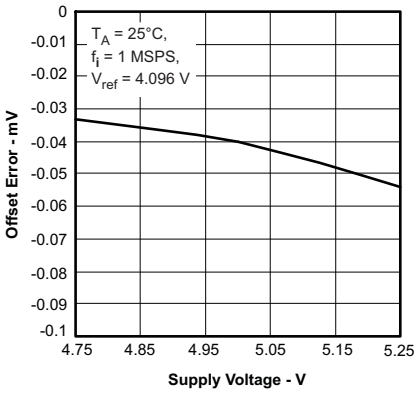

Figure 14.

OFFSET ERROR vs REFERENCE VOLTAGE

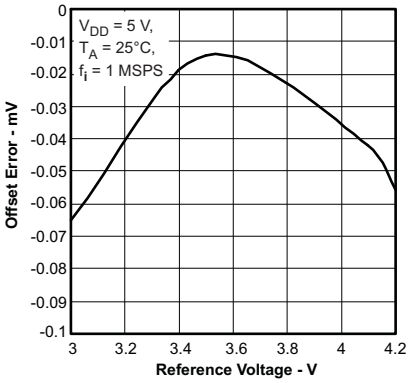

Figure 15.

GAIN ERROR vs SUPPLY VOLTAGE

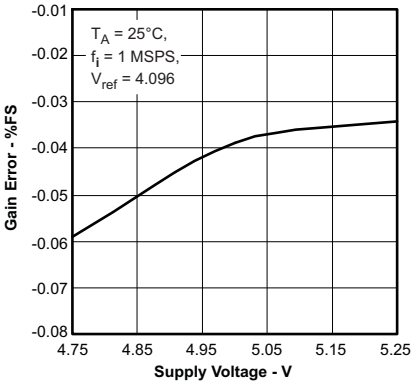

Figure 16.

GAIN ERROR vs FREE-AIR TEMPERATURE

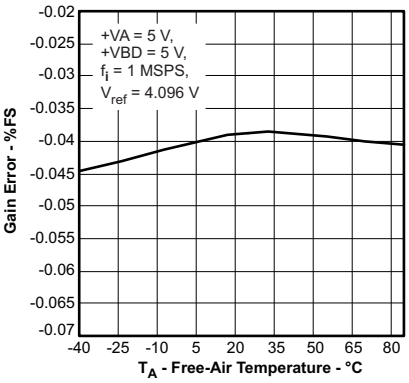

Figure 17.

GAIN ERROR vs REFERENCE VOLTAGE

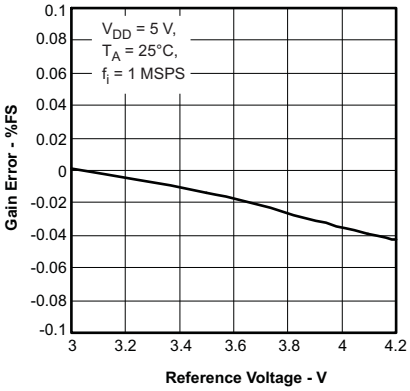

Figure 18.

TYPICAL CHARACTERISTICS (continued)

OFFSET ERROR TEMPERATURE DRIFT DISTRIBUTION (25 Samples)

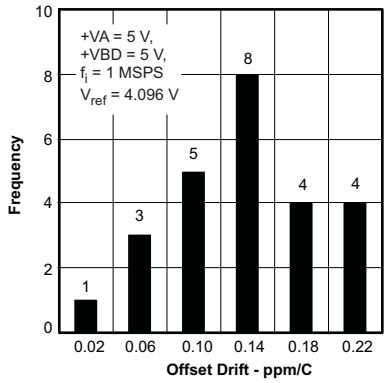

Figure 19.

GAIN ERROR TEMPERATURE DRIFT DISTRIBUTION (25 Samples)

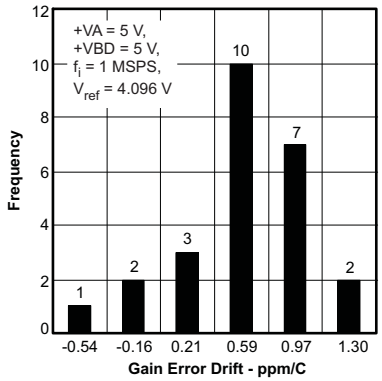

Figure 20.

TOTAL HARMONIC DISTORTION vs REFERENCE VOLTAGE

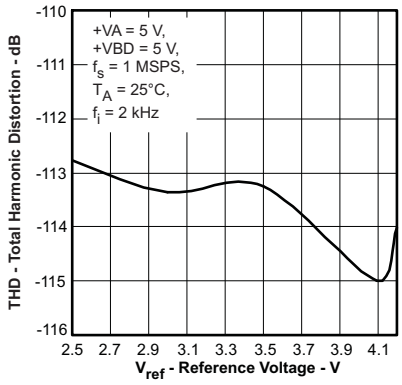

Figure 21.

SIGNAL-TO-NOISE RATIO vs REFERENCE VOLTAGE

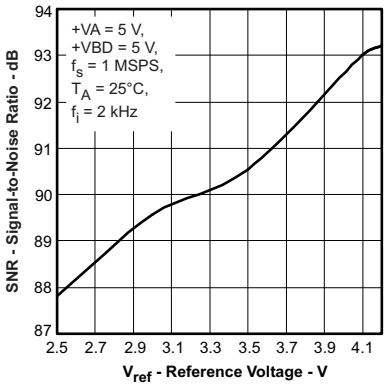

Figure 22.

SIGNAL-TO-NOISE + DISTORTION vs REFERENCE VOLTAGE

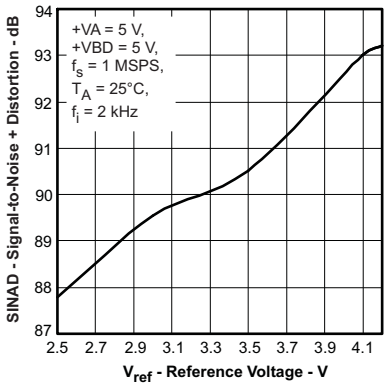

Figure 23.

TOTAL HARMONIC DISTORTION vs FREE-AIR TEMPERATURE

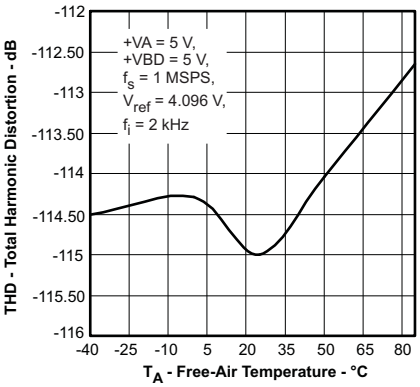

Figure 24.

SPURIOUS FREE DYNAMIC RANGE vs FREE-AIR TEMPERATURE

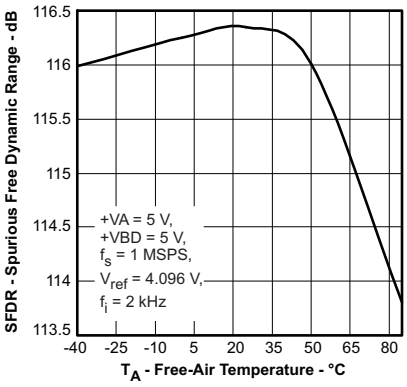

Figure 25.

SIGNAL-TO-NOISE RATIO vs FREE-AIR TEMPERATURE

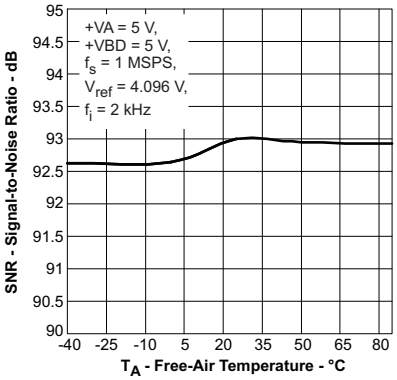

Figure 26.

SIGNAL-TO-NOISE + DISTORTION vs FREE-AIR TEMPERATURE

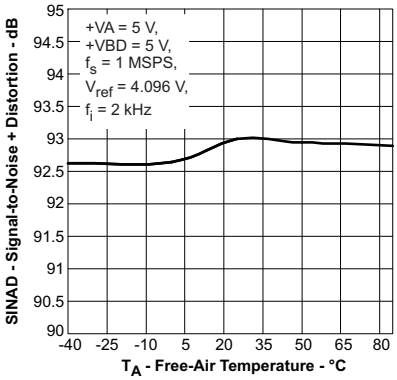

Figure 27.

TYPICAL CHARACTERISTICS (continued)

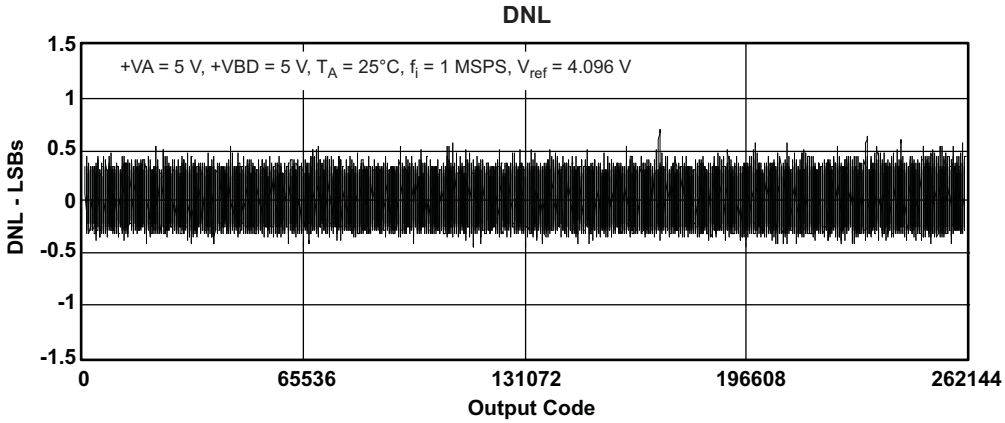

Figure 28.

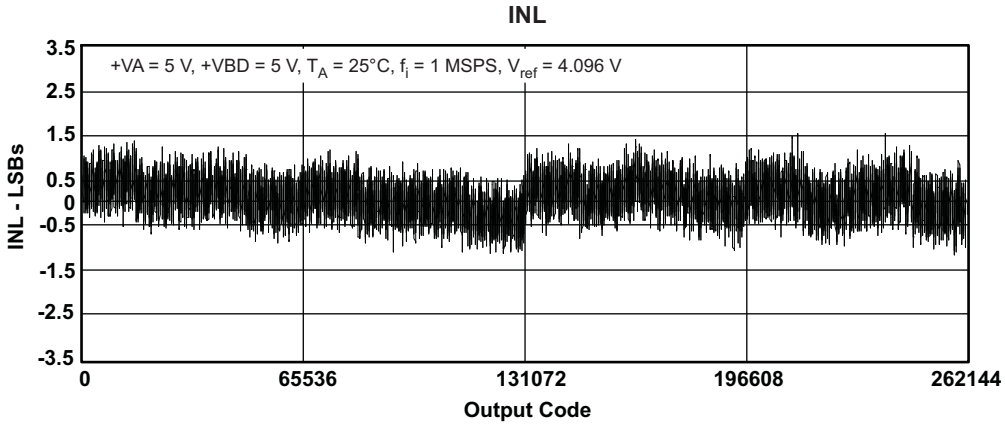

Figure 29.

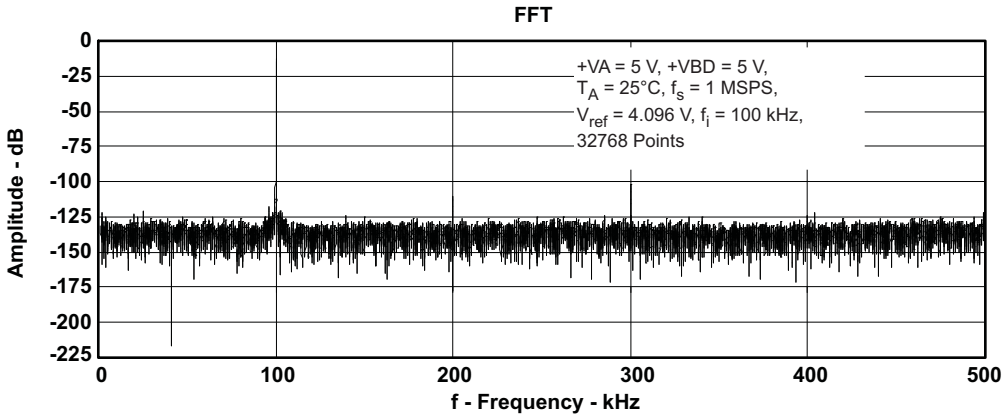

Figure 30.

TYPICAL CHARACTERISTICS (continued)

TIMING DIAGRAMS

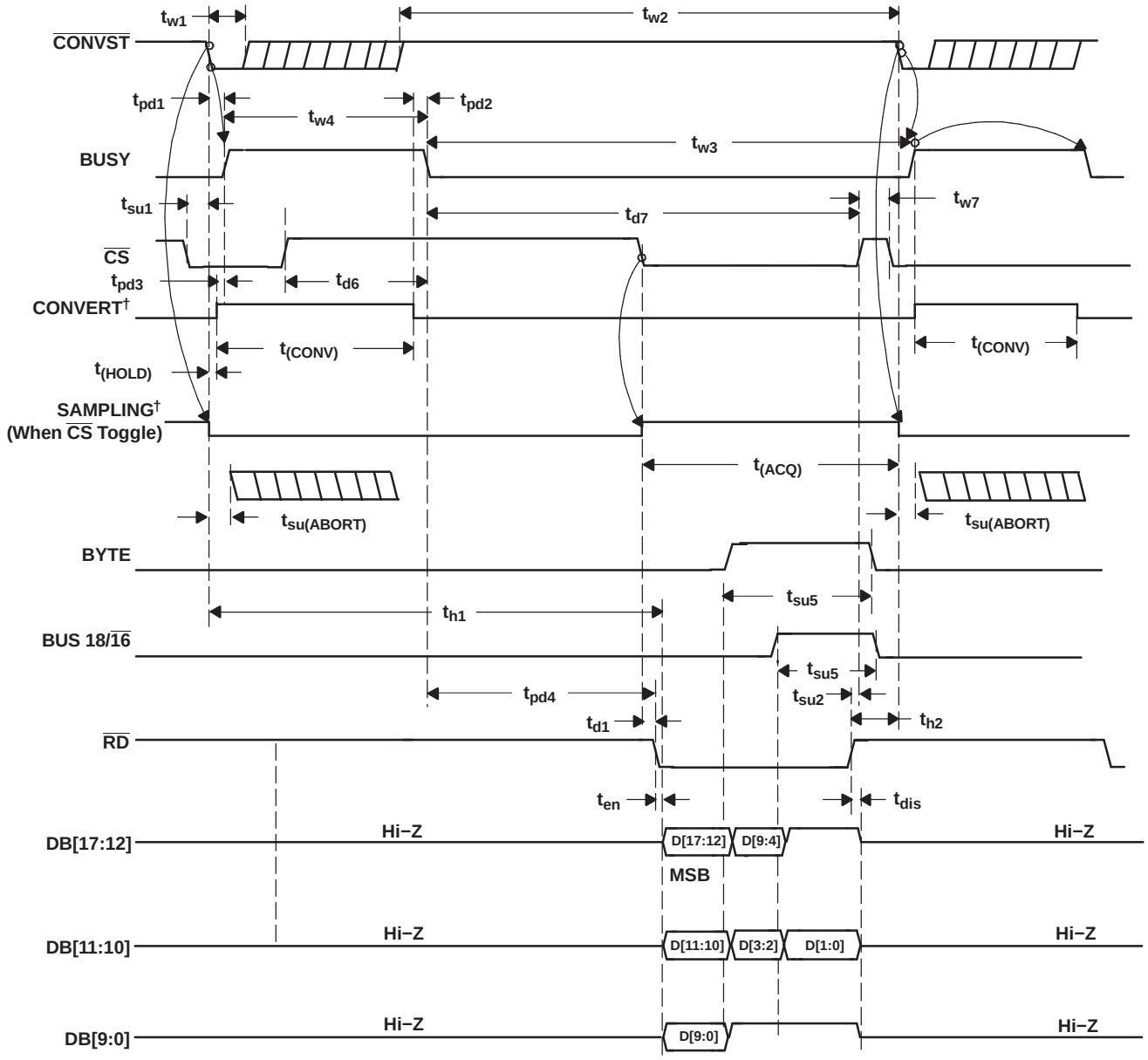

†Signal internal to device

Figure 31. Timing for Conversion and Acquisition Cycles With $\overline{CS}$ and $\overline{RD}$ Toggling

TYPICAL CHARACTERISTICS (continued)

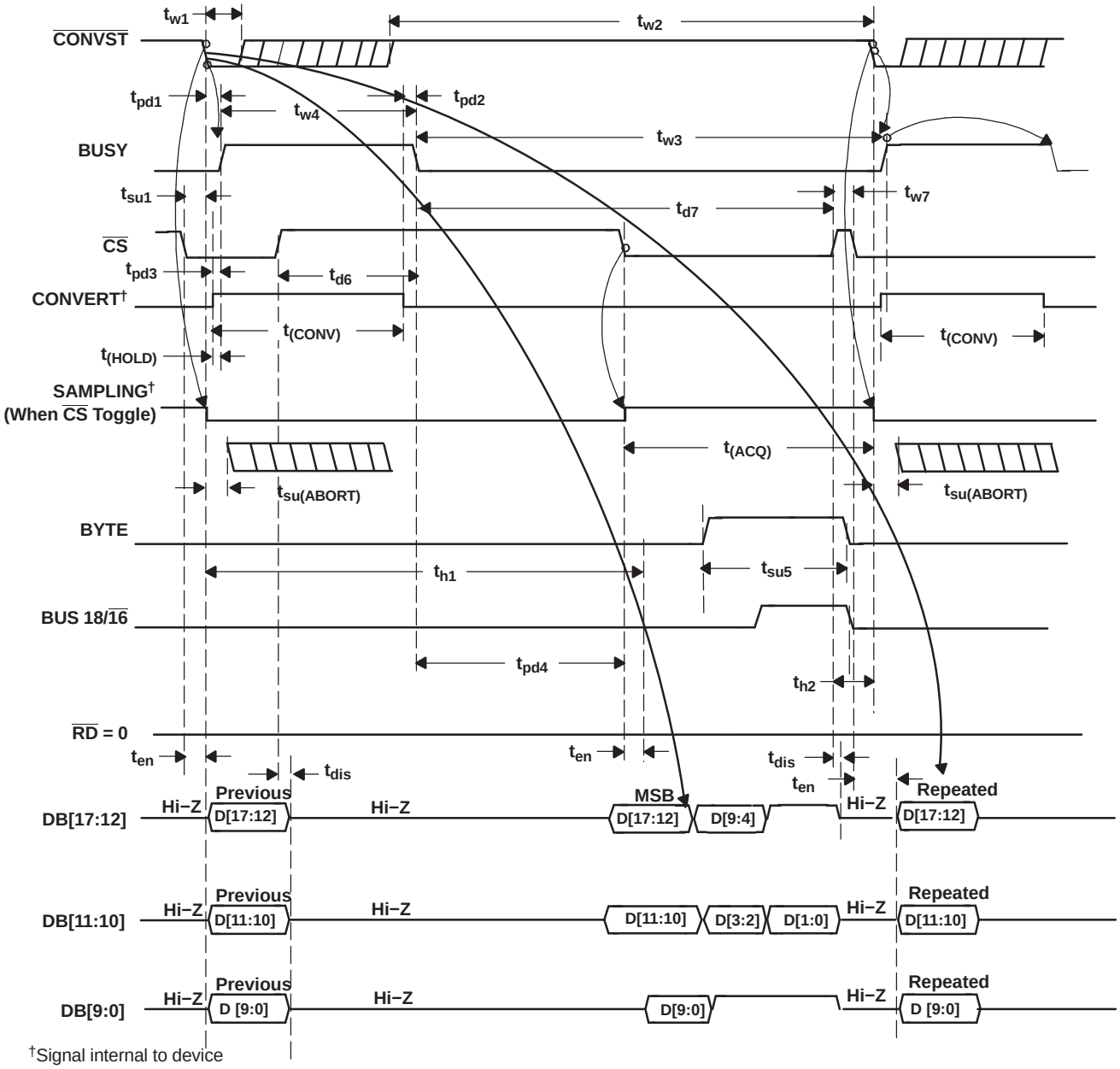

Figure 32. Timing for Conversion and Acquisition Cycles With $\overline{CS}$ Toggling, $\overline{RD}$ Tied to BDGND

TYPICAL CHARACTERISTICS (continued)

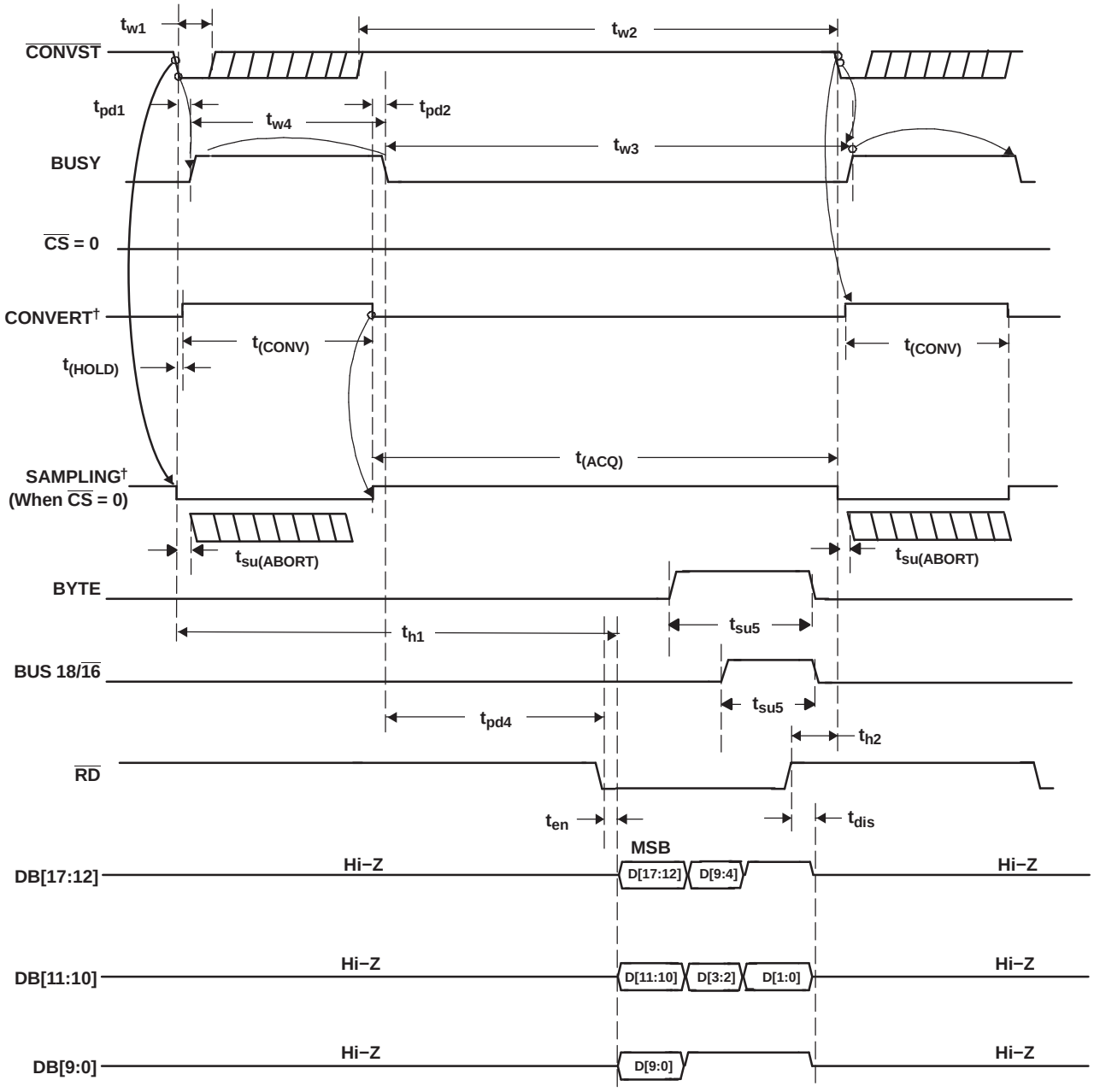

†Signal internal to device

Figure 33. Timing for Conversion and Acquisition Cycles With CS Tied to BDGND, RD Toggling

TYPICAL CHARACTERISTICS (continued)

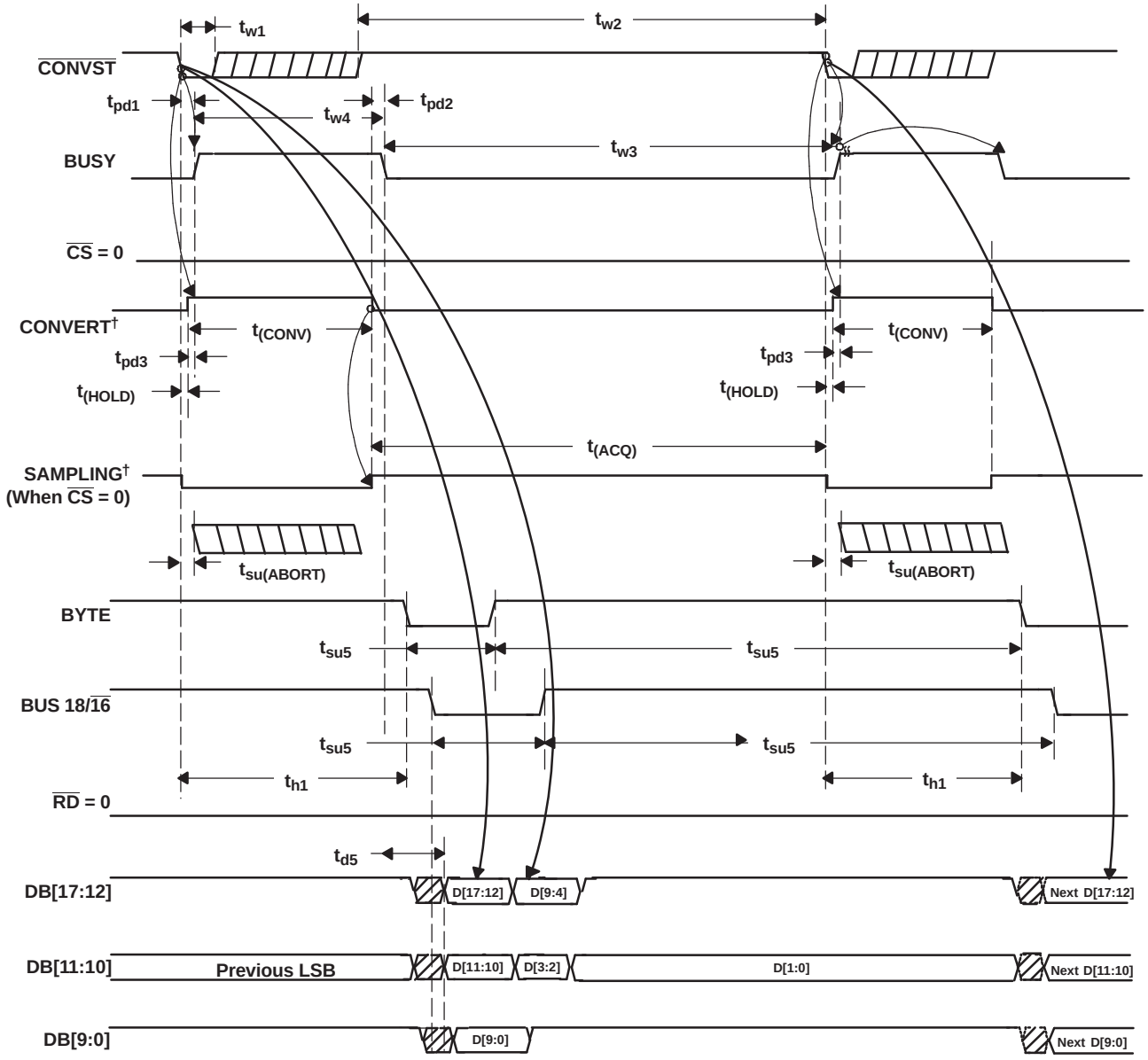

†Signal internal to device

Figure 34. Timing for Conversion and Acquisition Cycles With CS and RD Tied to BDGND - Auto Read

TYPICAL CHARACTERISTICS (continued)

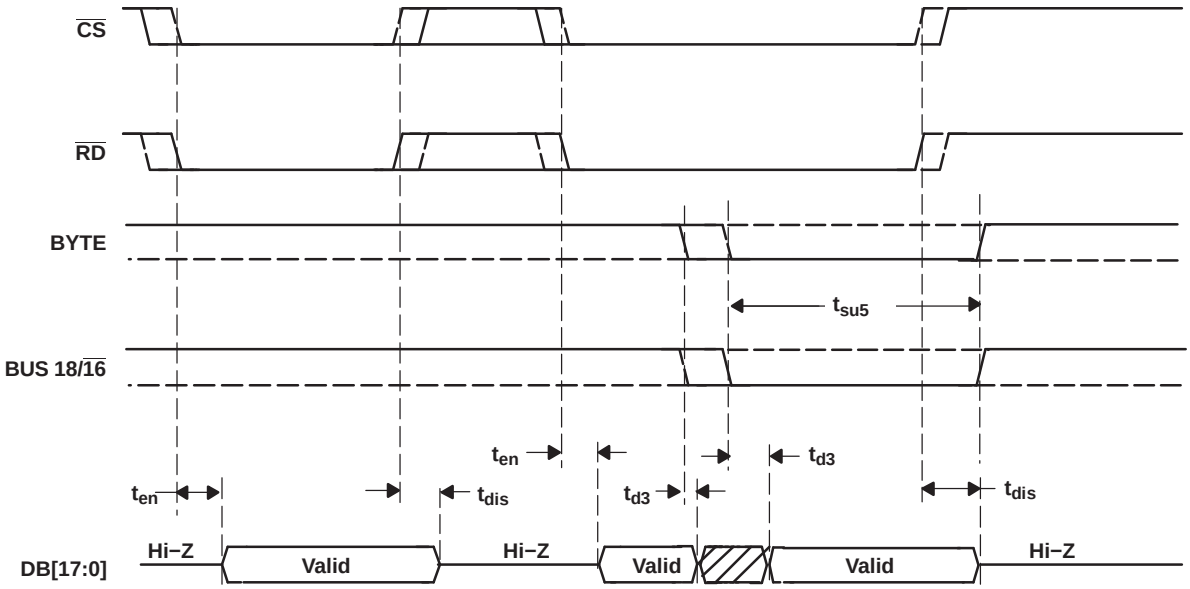

Figure 35. Detailed Timing for Read Cycles

APPLICATION INFORMATION

MICROCONTROLLER INTERFACING

ADS8481 to 8-Bit Microcontroller Interface

Figure 36 shows a parallel interface between the ADS8481 and a typical microcontroller using the 8-bit data bus. The BUSY signal is used as a falling-edge interrupt to the microcontroller.

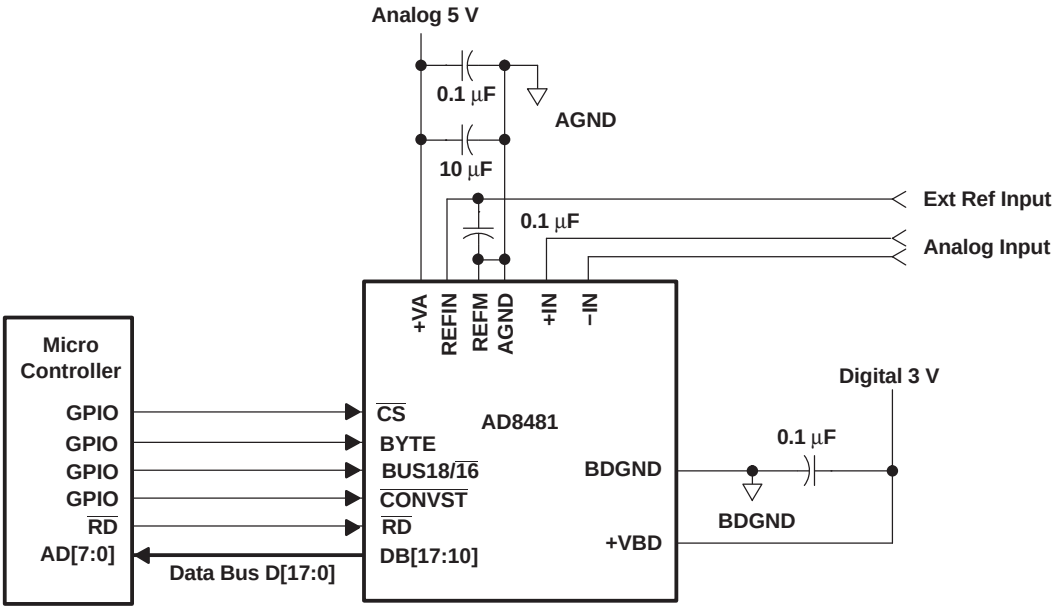

Figure 36. ADS8481 Application Circuitry

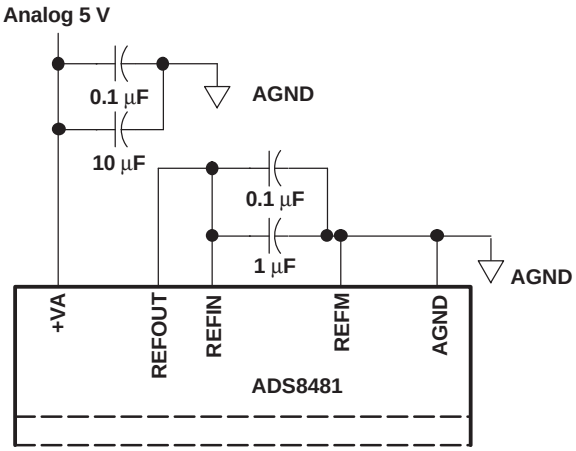

Figure 37. ADS8481 Using Internal Reference

PRINCIPLES OF OPERATION

The ADS8481 is a high-speed successive approximation register (SAR) analog-to-digital converter (ADC). The architecture is based on charge redistribution which inherently includes a sample/hold function. See Figure 36 for the application circuit for the ADS8481.

The conversion clock is generated internally. The conversion time of 710 ns is capable of sustaining a 1 MHz throughput.

The analog input is provided to two input pins: +IN and –IN. When a conversion is initiated, the differential input on these pins is sampled on the internal capacitor array. While a conversion is in progress, both inputs are disconnected from any internal function.

REFERENCE

The ADS8481 can operate with an external reference with a range from 3.0 V to 4.2 V. The reference voltage on the input pin #1 (REFIN) of the converter is internally buffered. A clean, low noise, well-decoupled reference voltage on this pin is required to ensure good performance of the converter. A low noise band-gap reference like the REF3240 can be used to drive this pin. A 0.1-µF decoupling capacitor is required between REFIN and REFM pins (pin #13 and pin #12) of the converter. This capacitor should be placed as close as possible to the pins of the device. Designers should strive to minimize the routing length of the traces that connect the terminals of the capacitor to the pins of the converter. An RC network can also be used to filter the reference voltage. A 100-Ω series resistor and a 0.1-µF capacitor, which can also serve as the decoupling capacitor can be used to filter the reference voltage.

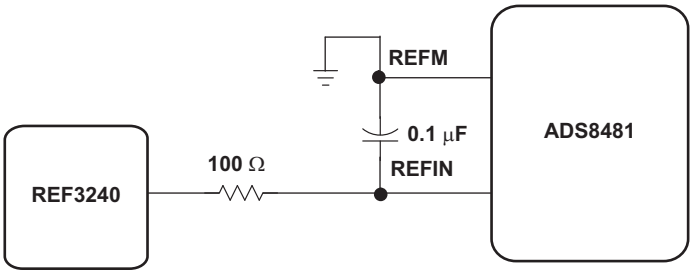

Figure 38. Reference Circuit

The ADS8481 also has limited low pass filtering capability built into the converter. The equivalent circuitry on the REFIN input is as shown in Figure 39.

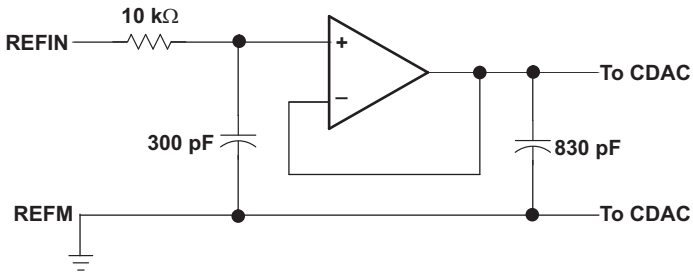

Figure 39. Reference Circuit

The REFM input of the ADS8481 should always be shorted to AGND.

A 4.096-V internal reference is included. When internal reference is used, pin 14 (REFOUT) is connected to pin 13 (REFIN) with a 0.1-µF decoupling capacitor and 1-nF storage capacitor between pin 14 (REFOUT) and pins 11 and 12 (REFM) (see Figure Figure 37). The internal reference of the converter is double buffered. If an external reference is used, the second buffer provides isolation between the external reference and the CDAC. This buffer is also used to recharge all of the capacitors of the CDAC during conversion. Pin 14 (REFOUT) can be left unconnected (floating) if an external reference is used.

PRINCIPLES OF OPERATION (continued)

ANALOG INPUT

When the converter enters the hold mode, the voltage difference between the +IN and –IN inputs is captured on the internal capacitor array. The voltage on the -IN input is limited between –0.2 V and 0.2 V, allowing the input to reject small signals which are common to both the +IN and –IN inputs. The +IN input has a range of –0.2 V to V_{ref} + 0.2 V. The input span [+IN – (–IN)] is limited to 0 V to V_{ref}.

The input current on the analog inputs depends upon a number of factors: sample rate, input voltage, and source impedance. Essentially, the current into the ADS8481 charges the internal capacitor array during the sample period. After this capacitance has been fully charged, there is no further input current. The source of the analog input voltage must be able to charge the input capacitance (65 pF) to an 18-bit settling level within the acquisition time (250 ns) of the device. When the converter goes into the hold mode, the input impedance is greater than 1 GΩ.

Care must be taken regarding the absolute analog input voltage. To maintain the linearity of the converter, the +IN and –IN inputs and the span [+IN – (–IN)] must be within the limits specified. Outside of these ranges, the converter's linearity may not meet specifications. To minimize noise, low bandwidth input signals with low-pass filters are used.

Care must be taken to ensure that the output impedance of the sources driving the +IN and –IN inputs are matched. If this is not observed, the two inputs could have different settling times. This may result in offset error, gain error, and linearity error which varies with temperature and input voltage.

The analog input to the converter needs to be driven with a low noise, high-speed op-amp like the THS4031. An RC filter is recommended at the input pins to low-pass filter the noise from the source. A series resistor of 20 Ω and a decoupling capacitor of 680 pF is recommended. The input to the converter is a uni-polar input voltage in the range 0 to V_{ref}. The THS4031 can be used in the source follower configuration to drive the converter.

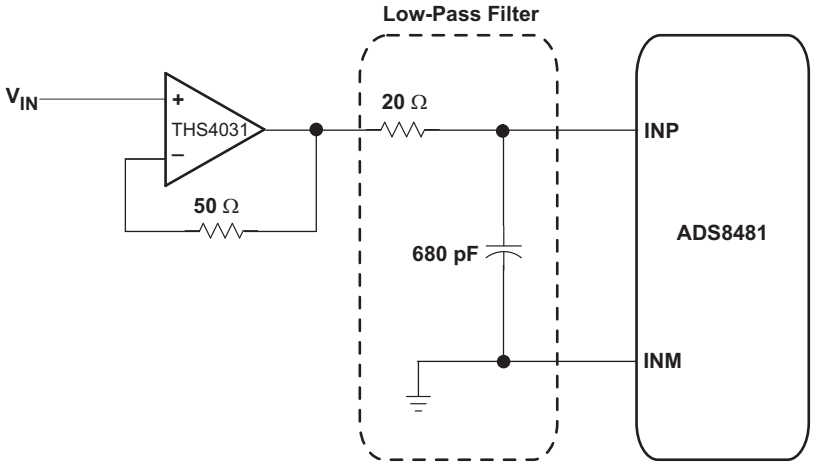

Figure 40. Input Circuit

In systems, where the input is bi-polar, the THS4031 can be used in the inverting configuration with an additional DC bias applied to its + input so as to keep the input to the ADS8481 within its rated operating voltage range. This configuration is also recommended when the ADS8481 is used in signal processing applications where good SNR and THD performance is required. The DC bias can be derived from the REF3220 or the REF3240 reference voltage ICs. The input configuration shown below is capable of delivering better than 92dB SNR and -100db THD at an input frequency of 100 kHz. In case band-pass filters are used to filter the input, care should be taken to ensure that the signal swing at the input of the band-pass filter is small so as to keep the distortion introduced by the filter minimal. In such cases, the gain of the circuit shown below can be increased to keep the input to the ADS8481 large to keep the SNR of the system high. Note that the gain of the system from the + input to the output of the THS4031 in such a configuration is a function of the gain of the AC signal. A resistor divider can be used to scale the output of the REF3220 or REF3240 to reduce the voltage at the DC input to THS4031 to keep the voltage at the input of the converter within its rated operating range.

PRINCIPLES OF OPERATION (continued)

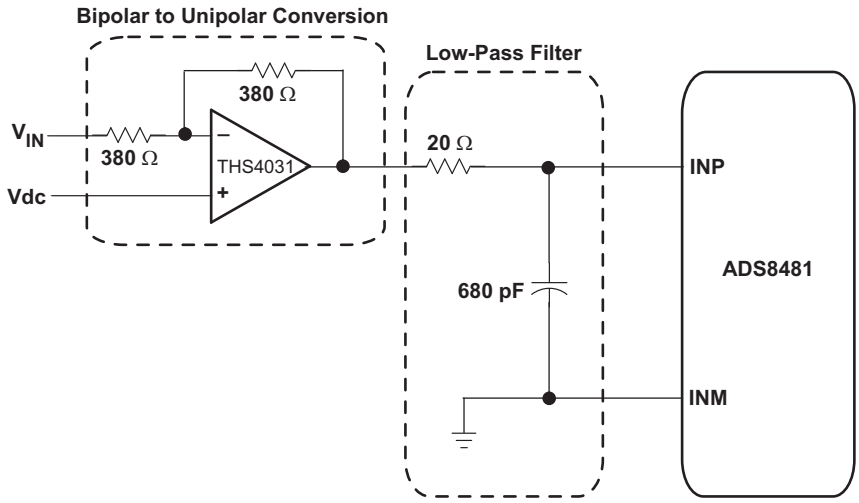

Figure 41. Input Circuit

DIGITAL INTERFACE

Timing and Control

See the timing diagrams in the specifications section for detailed information on timing signals and their requirements.

The ADS8481 uses an internal oscillator generated clock which controls the conversion rate and in turn the throughput of the converter. No external clock input is required.

Conversions are initiated by bringing the $\overline{\text{CONVST}}$ pin low for a minimum of 20 ns (after the 20 ns minimum requirement has been met, the $\overline{\text{CONVST}}$ pin can be brought high), while $\overline{\text{CS}}$ is low. The ADS8481 switches from the sample to the hold mode on the falling edge of the $\overline{\text{CONVST}}$ command. A clean and low jitter falling edge of this signal is important to the performance of the converter. The BUSY output is brought high immediately following $\overline{\text{CONVST}}$ going low. BUSY stays high throughout the conversion process and returns low when the conversion has ended.

Sampling starts with the falling edge of the BUSY signal when $\overline{\text{CS}}$ is tied low or starts with the falling edge of $\overline{\text{CS}}$ when BUSY is low.

Both $\overline{\text{RD}}$ and $\overline{\text{CS}}$ can be high during and before a conversion with one exception ($\overline{\text{CS}}$ must be low when $\overline{\text{CONVST}}$ goes low to initiate a conversion). Both the $\overline{\text{RD}}$ and $\overline{\text{CS}}$ pins are brought low in order to enable the parallel output bus with the conversion.

Reading Data

The ADS8481 outputs full parallel data in straight binary format as shown in Table 1. The parallel output is active when $\overline{\text{CS}}$ and $\overline{\text{RD}}$ are both low. There is a minimal quiet zone requirement around the falling edge of $\overline{\text{CONVST}}$. This is 50 ns prior to the falling edge of $\overline{\text{CONVST}}$ and 40 ns after the falling edge. No data read should attempted within this zone. Any other combination of $\overline{\text{CS}}$ and $\overline{\text{RD}}$ sets the parallel output to 3-state. BYTE and BUS18/$\overline{16}$ are used for multiword read operations. BYTE is used whenever lower bits on the bus are output on the higher byte of the bus. BUS18/$\overline{16}$ is used whenever the last two bits on the 18-bit bus is output on either bytes of the higher 16-bit bus. Refer to Table 1 for ideal output codes.

Table 1. Ideal Input Voltages and Output Codes

DESCRIPTION	ANALOG VALUE	DIGITAL OUTPUT STRAIGHT BINARY	
Full scale range	$+V_{ref}$		
Least significant bit (LSB)	$(+V_{ref})/262144$	**BINARY CODE**	**HEX CODE**
+Full scale	$(+V_{ref})$ – 1 LSB	11 1111 1111 1111 1111	3FFFF
Midscale	$(+V_{ref})/2$	10 0000 0000 0000 0000	20000
Midscale – 1 LSB	$(+V_{ref})/2$ – 1 LSB	01 1111 1111 1111 1111	1FFFF
Zero	0 V	00 0000 0000 0000 0000	00000

The output data is a full 18-bit word (D17–D0) on DB17–DB0 pins (MSB–LSB) if both BUS18/$\overline{16}$ and BYTE are low.

The result may also be read on an 16-bit bus by using only pins DB17–DB2. In this case two reads are necessary: the first as before, leaving both BUS18/$\overline{16}$ and BYTE low and reading the 16 most significant bits (D17–D2) on pins DB17–DB2, then bringing BUS18/$\overline{16}$ high while holding BYTE low. When BUS18/$\overline{16}$ is high, the lower two bits (D1–D0) appear on pins DB3–DB2.

The result may also be read on an 8-bit bus for convenience. This is done by using only pins DB17–DB10. In this case three reads are necessary: the first as before, leaving both BUS18/$\overline{16}$ and BYTE low and reading the 8 most significant bits on pins DB17–DB10, then bringing BYTE high while holding BUS18/$\overline{16}$ low. When BYTE is high, the medium bits (D9–D2) appear on pins DB17–DB10. The last read is done by bringing BUS18/$\overline{16}$ high while holding BYTE high. When BUS18/16 is high, the lower two bits (D1–D0) appear on pins DB11–DB10. The last read cycle is not necessary if only the first 16 most significant bits are of interest.

All of these multiword read operations can be performed with multiple active $\overline{RD}$ (toggling) or with $\overline{RD}$ held low for simplicity. This is referred to as the AUTO READ operation.

Table 2. Conversion Data Read Out

BYTE	BUS18/$\overline{16}$	DATA READ OUT				
		PINS DB17–DB12	PINS DB11–DB10	PINS DB9–DB4	PINS DB3–DB2	PINS DB1–DB0
High	High	All One's	D1–D0	All One's	All One's	All One's
Low	High	All One's	All One's	All One's	D1–D0	All One's
High	Low	D9–D4	D3–D2	All One's	All One's	All One's
Low	Low	D17–D12	D11–D10	D9–D4	D3–D2	D1–D0

RESET

On power-up, internal POWER-ON RESET circuitry generates the reset required for the device. The first three conversions after power-up are used to load factory trimming data for a specific device to assure high accuracy of the converter. The results of the first three conversions are invalid and should be discarded.

The device can also be reset through the use of the combination fo $\overline{CS}$ and C$\overline{ONVST}$. Since the BUSY signal is held at high during the conversion, either one of these conditions triggers an internal self-clear reset to the converter.

- Issue a $\overline{CONVST}$ when $\overline{CS}$ is low and the internal convert state is high. The falling edge of $\overline{CONVST}$ starts a reset.
- Issue a $\overline{CS}$ (select the device) while the internal convert state is high. The falling edge of $\overline{CS}$ causes a reset.

Once the device is reset, all output latches are cleared (set to zeroes) and the BUSY signal is brought low. A new sampling period is started at the falling edge of the BUSY signal immediately after the instant of the internal reset.

LAYOUT

For optimum performance, care must be taken with the physical layout of the ADS8481 circuitry.

As the ADS8481 offers single-supply operation, it is often used in close proximity with digital logic, microcontrollers, microprocessors, and digital signal processors. The more digital logic present in the design and the higher the switching speed, the more difficult it is to achieve good performance from the converter.

The basic SAR architecture is sensitive to glitches or sudden changes on the power supply, reference, ground connections and digital inputs that occur just prior to latching the output of the analog comparator. Thus, driving any single conversion for an n-bit SAR converter, there are at least n windows in which large external transient voltages can affect the conversion result. Such glitches might originate from switching power supplies, nearby digital logic, or high power devices.

The degree of error in the digital output depends on the reference voltage, layout, and the exact timing of the external event.

On average, the ADS8481 draws very little current from an external reference as the reference voltage is internally buffered. If the reference voltage is external and originates from an op amp, make sure that it can drive the bypass capacitor or capacitors without oscillation. A 0.1-µF capacitor is recommended from pin 13 (REFIN) directly to pin 12 (REFM). REFM and AGND must be shorted on the same ground plane under the device.

The AGND and BDGND pins should be connected to a clean ground point. In all cases, this should be the analog ground. Avoid connections which are too close to the grounding point of a microcontroller or digital signal processor. If required, run a ground trace directly from the converter to the power supply entry point. The ideal layout consists of an analog ground plane dedicated to the converter and associated analog circuitry.

As with the AGND connections, +VA should be connected to a 5-V power supply plane or trace that is separate from the connection for digital logic until they are connected at the power entry point. Power to the ADS8481 should be clean and well bypassed. A 0.1-µF ceramic bypass capacitor should be placed as close to the device as possible. See Table 3 for the placement of the capacitor. In addition, a 1-µF to 10-µF capacitor is recommended. In some situations, additional bypassing may be required, such as a 100-µF electrolytic capacitor or even a Pi filter made up of inductors and capacitors—all designed to essentially low-pass filter the 5-V supply, removing the high frequency noise.

Table 3. Power Supply Decoupling Capacitor Placement

POWER SUPPLY PLANE	CONVERTER ANALOG SIDE	CONVERTER DIGITAL SIDE
SUPPLY PINS		
Pin pairs that require shortest path to decoupling capacitors	(7,8), (9,10), (16,17), (20,21), (22,23), (25,26)	36, 37
Pins that require no decoupling	24, 26	1

PACKAGING INFORMATION

Orderable Device	Status (1)	Package Type	Package Drawing	Pins	Package Qty	Eco Plan (2)	Lead/Ball Finish (6)	MSL Peak Temp (3)	Op Temp (°C)	Device Marking (4/5)	Samples
ADS8481IBRGZT	ACTIVE	VQFN	RGZ	48	250	Green (RoHS & no Sb/Br)	NIPDAU	Level-2-260C-1 YEAR	-40 to 85	ADS 8481I B	Samples
ADS8481IBRGZTG4	ACTIVE	VQFN	RGZ	48	250	Green (RoHS & no Sb/Br)	NIPDAU	Level-2-260C-1 YEAR	-40 to 85	ADS 8481I B	Samples
ADS8481IRGZT	NRND	VQFN	RGZ	48	250	Green (RoHS & no Sb/Br)	NIPDAU	Level-2-260C-1 YEAR	-40 to 85	ADS 8481I	

(1) The marketing status values are defined as follows:
ACTIVE: Product device recommended for new designs.
LIFEBUY: TI has announced that the device will be discontinued, and a lifetime-buy period is in effect.
NRND: Not recommended for new designs. Device is in production to support existing customers, but TI does not recommend using this part in a new design.
PREVIEW: Device has been announced but is not in production. Samples may or may not be available.
OBSOLETE: TI has discontinued the production of the device.

(2) **RoHS:** TI defines "RoHS" to mean semiconductor products that are compliant with the current EU RoHS requirements for all 10 RoHS substances, including the requirement that RoHS substance do not exceed 0.1% by weight in homogeneous materials. Where designed to be soldered at high temperatures, "RoHS" products are suitable for use in specified lead-free processes. TI may reference these types of products as "Pb-Free".
RoHS Exempt: TI defines "RoHS Exempt" to mean products that contain lead but are compliant with EU RoHS pursuant to a specific EU RoHS exemption.
Green: TI defines "Green" to mean the content of Chlorine (Cl) and Bromine (Br) based flame retardants meet JS709B low halogen requirements of <=1000ppm threshold. Antimony trioxide based flame retardants must also meet the <=1000ppm threshold requirement.

(3) MSL, Peak Temp. - The Moisture Sensitivity Level rating according to the JEDEC industry standard classifications, and peak solder temperature.

(4) There may be additional marking, which relates to the logo, the lot trace code information, or the environmental category on the device.

(5) Multiple Device Markings will be inside parentheses. Only one Device Marking contained in parentheses and separated by a "~" will appear on a device. If a line is indented then it is a continuation of the previous line and the two combined represent the entire Device Marking for that device.

(6) Lead/Ball Finish - Orderable Devices may have multiple material finish options. Finish options are separated by a vertical ruled line. Lead/Ball Finish values may wrap to two lines if the finish value exceeds the maximum column width.

Important Information and Disclaimer: The information provided on this page represents TI's knowledge and belief as of the date that it is provided. TI bases its knowledge and belief on information provided by third parties, and makes no representation or warranty as to the accuracy of such information. Efforts are underway to better integrate information from third parties. TI has taken and

continues to take reasonable steps to provide representative and accurate information but may not have conducted destructive testing or chemical analysis on incoming materials and chemicals.
TI and TI suppliers consider certain information to be proprietary, and thus CAS numbers and other limited information may not be available for release.

In no event shall TI's liability arising out of such information exceed the total purchase price of the TI part(s) at issue in this document sold by TI to Customer on an annual basis.

TAPE AND REEL INFORMATION

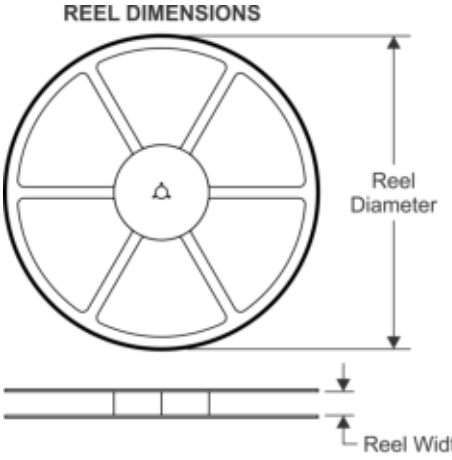

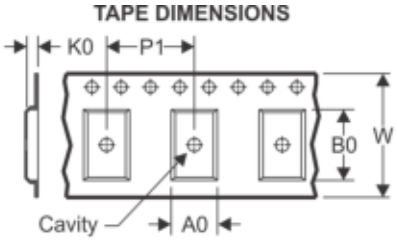

A0	Dimension designed to accommodate the component width
B0	Dimension designed to accommodate the component length
K0	Dimension designed to accommodate the component thickness
W	Overall width of the carrier tape
P1	Pitch between successive cavity centers

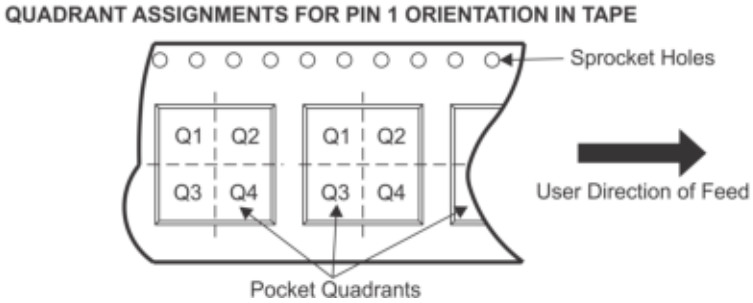

*All dimensions are nominal

Device	Package Type	Package Drawing	Pins	SPQ	Reel Diameter (mm)	Reel Width W1 (mm)	A0 (mm)	B0 (mm)	K0 (mm)	P1 (mm)	W (mm)	Pin1 Quadrant
ADS8481IBRGZT	VQFN	RGZ	48	250	180.0	16.4	7.3	7.3	1.5	12.0	16.0	Q2
ADS8481IRGZT	VQFN	RGZ	48	250	180.0	16.4	7.3	7.3	1.5	12.0	16.0	Q2

TAPE AND REEL BOX DIMENSIONS

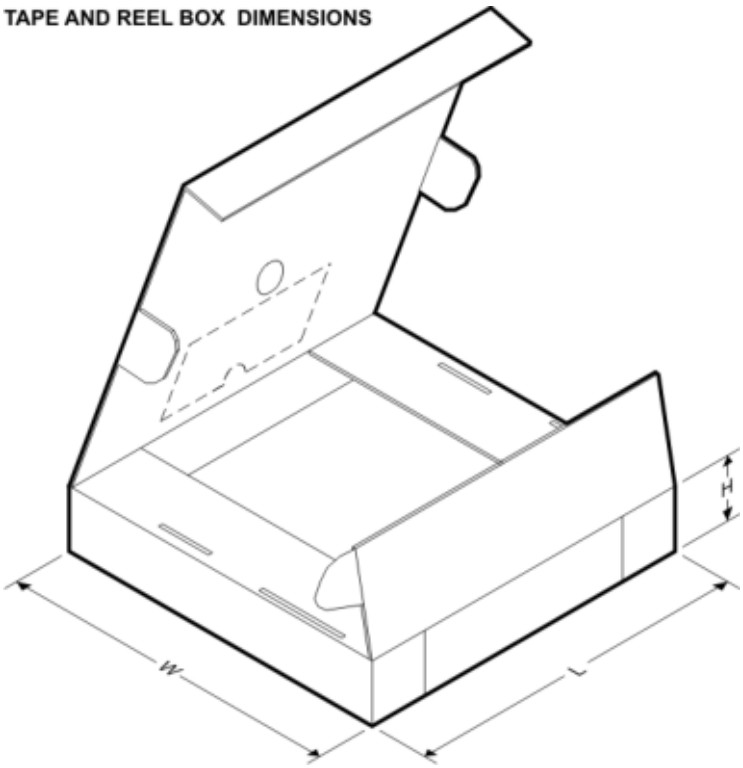

*All dimensions are nominal

Device	Package Type	Package Drawing	Pins	SPQ	Length (mm)	Width (mm)	Height (mm)
ADS8481IBRGZT	VQFN	RGZ	48	250	213.0	191.0	55.0
ADS8481IRGZT	VQFN	RGZ	48	250	213.0	191.0	55.0

GENERIC PACKAGE VIEW

RGZ 48

VQFN - 1 mm max height

7 x 7, 0.5 mm pitch

PLASTIC QUADFLAT PACK- NO LEAD

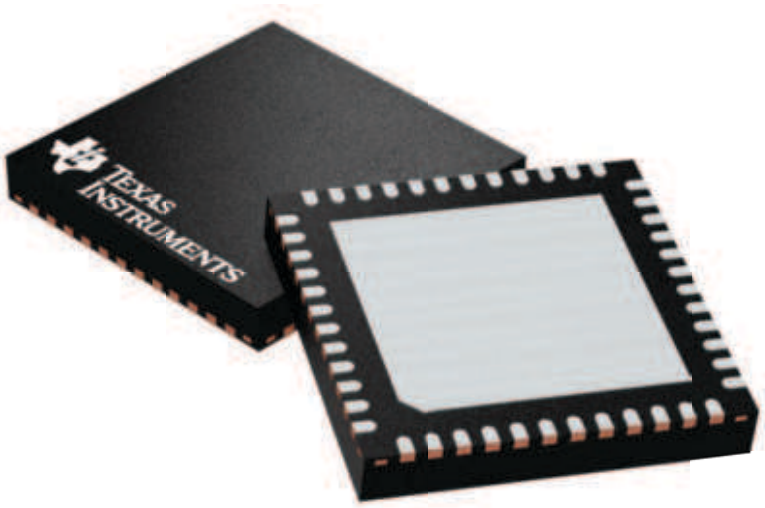

Images above are just a representation of the package family, actual package may vary.
Refer to the product data sheet for package details.

4224671/A

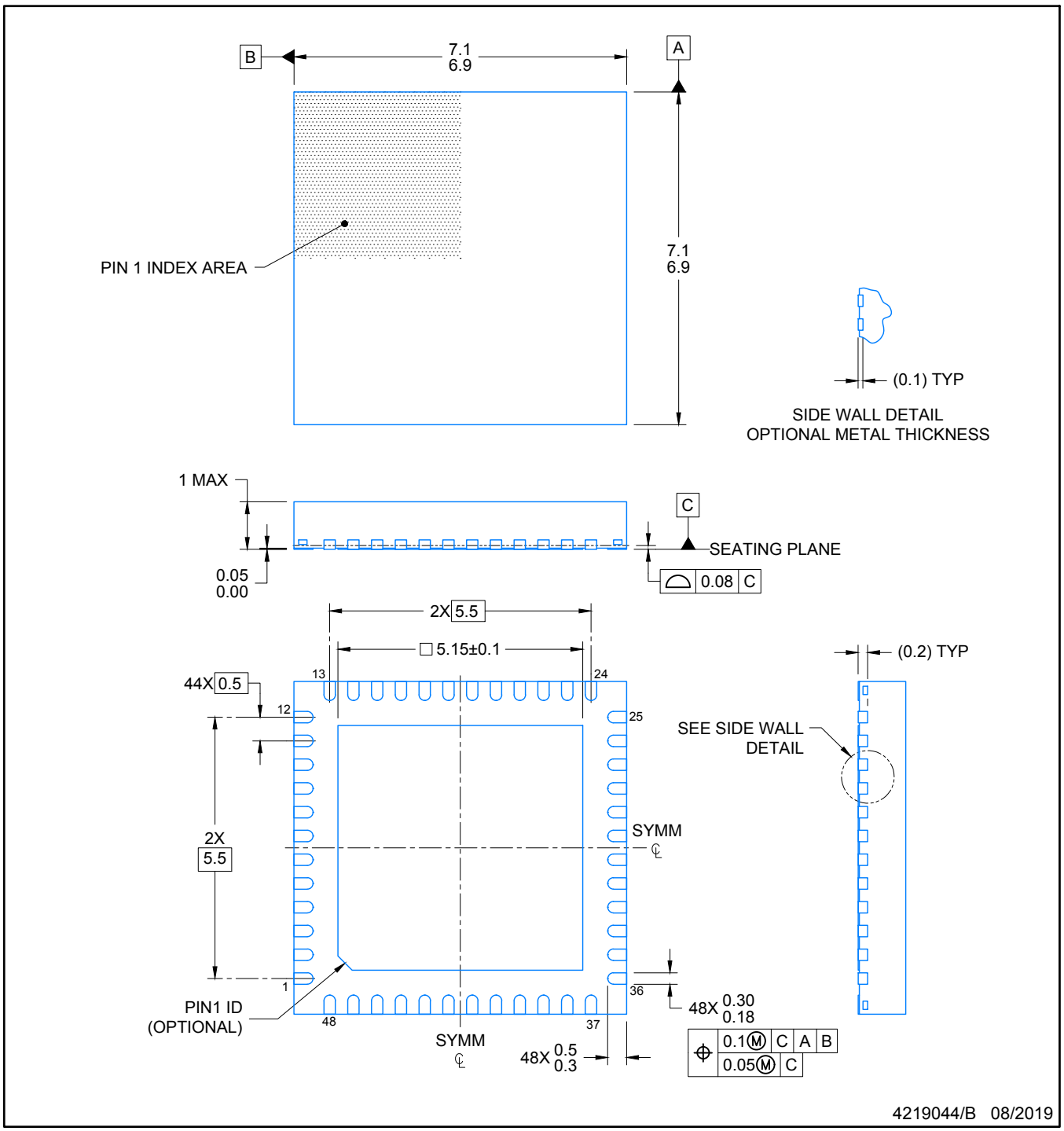

NOTES:

1. All linear dimensions are in millimeters. Any dimensions in parenthesis are for reference only. Dimensioning and tolerancing per ASME Y14.5M.
2. This drawing is subject to change without notice.
3. The package thermal pad must be soldered to the printed circuit board for optimal thermal and mechanical performance.

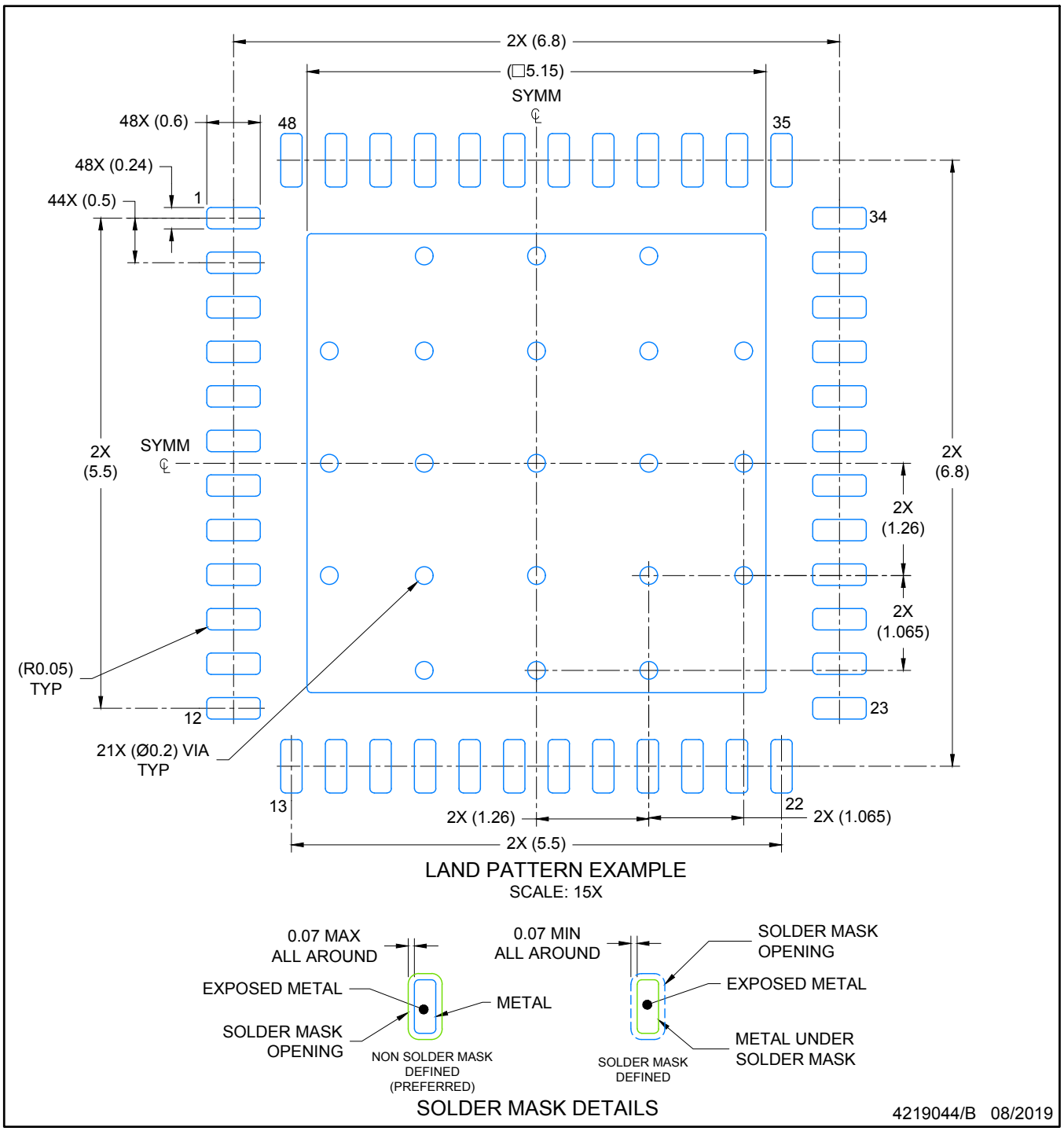

NOTES: (continued)

4. This package is designed to be soldered to a thermal pad on the board. For more information, see Texas Instruments literature number SLUA271 (www.ti.com/lit/slua271).
5. Vias are optional depending on application, refer to device data sheet. If any vias are implemented, refer to their locations shown on this view. It is recommended that vias under paste be filled, plugged or tented.

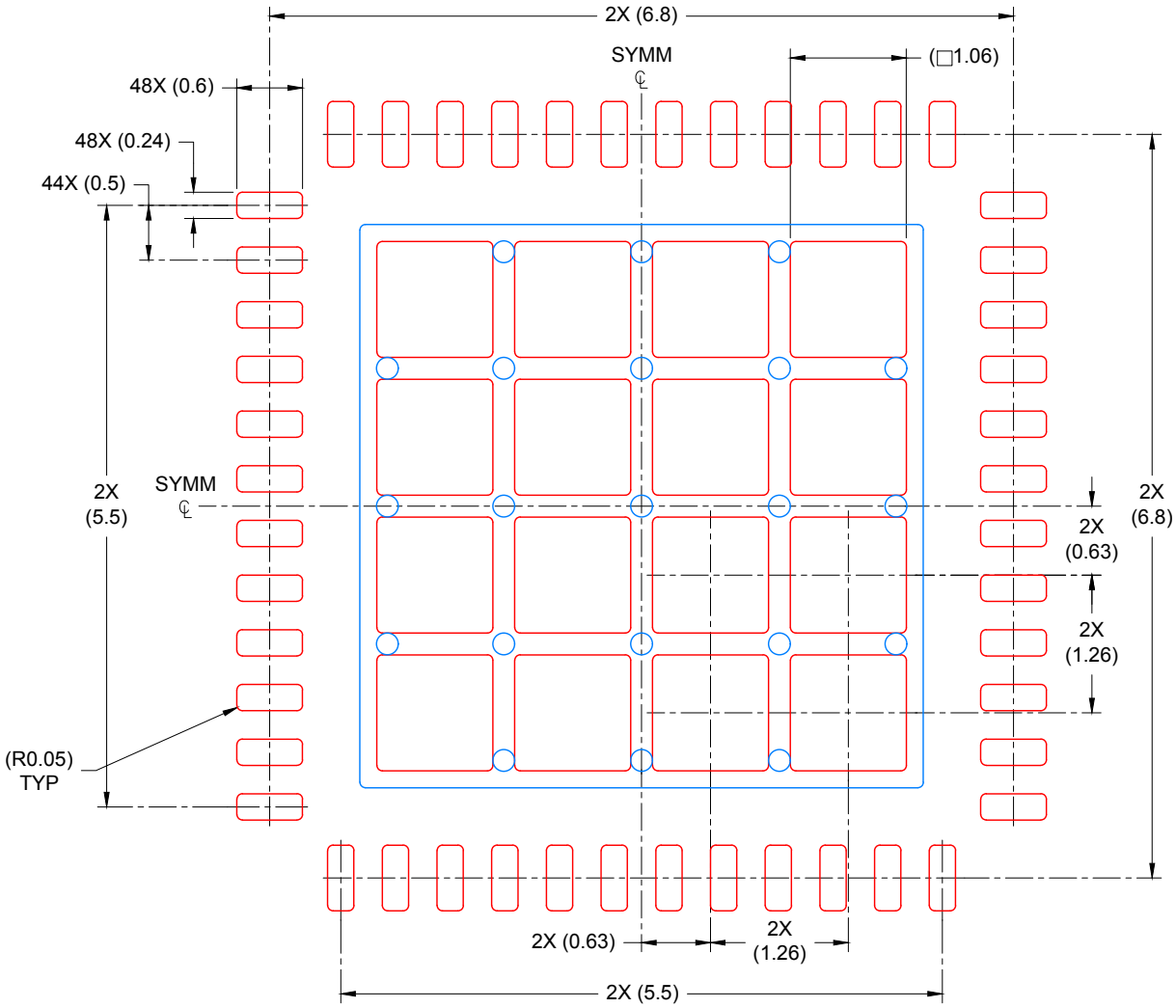

SOLDER PASTE EXAMPLE
BASED ON 0.125 mm THICK STENCIL

EXPOSED PAD
67% PRINTED COVERAGE BY AREA
SCALE: 15X

4219044/B 08/2019

NOTES: (continued)

6. Laser cutting apertures with trapezoidal walls and rounded corners may offer better paste release. IPC-7525 may have alternate design recommendations.

IMPORTANT NOTICE AND DISCLAIMER

TI PROVIDES TECHNICAL AND RELIABILITY DATA (INCLUDING DATASHEETS), DESIGN RESOURCES (INCLUDING REFERENCE DESIGNS), APPLICATION OR OTHER DESIGN ADVICE, WEB TOOLS, SAFETY INFORMATION, AND OTHER RESOURCES “AS IS” AND WITH ALL FAULTS, AND DISCLAIMS ALL WARRANTIES, EXPRESS AND IMPLIED, INCLUDING WITHOUT LIMITATION ANY IMPLIED WARRANTIES OF MERCHANTABILITY, FITNESS FOR A PARTICULAR PURPOSE OR NON-INFRINGEMENT OF THIRD PARTY INTELLECTUAL PROPERTY RIGHTS.

These resources are intended for skilled developers designing with TI products. You are solely responsible for (1) selecting the appropriate TI products for your application, (2) designing, validating and testing your application, and (3) ensuring your application meets applicable standards, and any other safety, security, or other requirements. These resources are subject to change without notice. TI grants you permission to use these resources only for development of an application that uses the TI products described in the resource. Other reproduction and display of these resources is prohibited. No license is granted to any other TI intellectual property right or to any third party intellectual property right. TI disclaims responsibility for, and you will fully indemnify TI and its representatives against, any claims, damages, costs, losses, and liabilities arising out of your use of these resources.

TI’s products are provided subject to TI’s Terms of Sale (www.ti.com/legal/termsofsale.html) or other applicable terms available either on ti.com or provided in conjunction with such TI products. TI’s provision of these resources does not expand or otherwise alter TI’s applicable warranties or warranty disclaimers for TI products.

Mailing Address: Texas Instruments, Post Office Box 655303, Dallas, Texas 75265
Copyright © 2020, Texas Instruments Incorporated