Precision ±18g Dual-Axis iMEMS® Accelerometer

Data Sheet ADXL205

FEATURES

- High performance, dual-axis accelerometer on a single IC chip
- 5 mm × 5 mm × 2 mm LCC package
- Low power: 700 µA at V_S = 5 V (typical)
- −40°C to +125°C temperature range
- X and Y axes aligned to within 0.1° (typical)
- Bandwidth adjustment with a single capacitor
- Single-supply operation
- 3500 *g* shock survival
- RoHS compliant
- Compatible with Sn/Pb- and Pb-free solder processes
- Qualified for automotive applications

APPLICATIONS

- Vehicle dynamic controls
- Electronic chassis controls
- Platform stabilization/leveling
- Navigation
- Alarms and motion detectors
- High accuracy, 2-axis tilt sensing
- Vibration monitoring and compensation
- Abuse event detection

GENERAL DESCRIPTION

The ADXL205 are high precision, low power, complete dual-axis accelerometers with signal conditioned voltage outputs, all on a single, monolithic IC. The ADXL205 measure acceleration with a full-scale range of ±18 *g*. The ADXL205 can measure both dynamic acceleration (for example, vibration) and static acceleration (for example, gravity).

The typical noise floor is 500 µ*g*/√Hz.

The user selects the bandwidth of the accelerometer using Capacitor C_X and Capacitor C_Y at the X_{OUT} and Y_{OUT} pins. Bandwidths of 0.5 Hz to 10kHz can be selected to suit the application.

The ADXL205 is available in a 5 mm × 5 mm × 2 mm, 8-terminal ceramic LCC package.

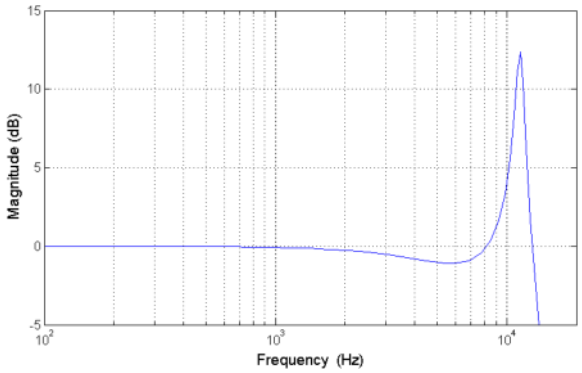

ADXL205 FUNCTIONAL BLOCK DIAGRAM

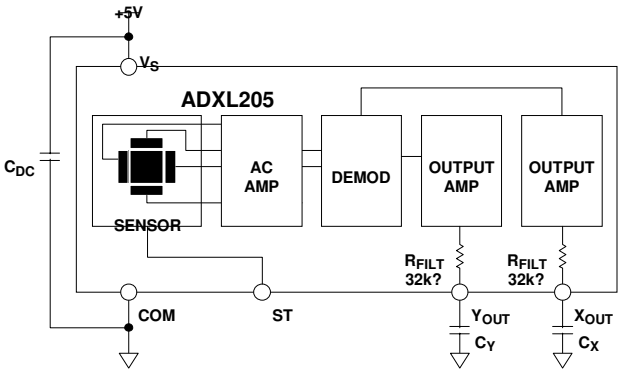

Figure 1.

Rev. PrA
Information furnished by Analog Devices is believed to be accurate and reliable. However, no responsibility is assumed by Analog Devices for its use, nor for any infringements of patents or other rights of third parties that may result from its use. Specifications subject to change without notice. No license is granted by implication or otherwise under any patent or patent rights of Analog Devices. Trademarks and registered trademarks are the property of their respective owners.

One Technology Way, P.O. Box 9106, Norwood, MA 02062-9106, U.S.A.
Tel: 781.329.4700 www.analog.com
Fax: 781.461.3113 ©2004–2011 Analog Devices, Inc. All rights reserved.

TABLE OF CONTENTS

Features 1
Applications 1
General Description 1
Functional Block Diagrams 1
Specifications 3
Absolute Maximum Ratings 4
ESD Caution 4
Pin Configurations and Function Descriptions 5
Typical Performance Characteristics ..... **Error! Bookmark not defined.**
Theory of Operation 7
Performance 8
Power Supply Decoupling 8
Setting the Bandwidth Using C_X and C_Y 8
Self Test 8
Design Trade-Offs for Selecting Filter Characteristics: The Noise/Bandwidth Trade-Off 9
Using the ADXL205 with Operating Voltages Other than 5 V 9
Using the ADXL205 as a Dual-Axis Tilt Sensor 9
Outline Dimensions 10
Ordering Guide 10

SPECIFICATIONS

$T_A = -40°C$ to $+125°C$, $V_S = 5$ V, $C_X = C_Y = 1000$ pF, acceleration = 0 *g*, unless otherwise noted. All minimum and maximum specifications are guaranteed. All typical specifications are not guaranteed.

Table 1.		AD205			
Parameter	**Test Conditions**	**Min**	**Typ**	**Max**	**Unit**
SENSOR	Each axis				
Measurement Range[1]		±18			*g*
Nonlinearity	% of full scale		±0.2	±1.25	%
Package Alignment Error			±1		Degrees
Alignment Error (ADXL203)	X to Y sensor		±0.1		Degrees
Cross-Axis Sensitivity			±1.5	±3	%
SENSITIVITY (RATIOMETRIC)[2]	Each axis				
Sensitivity at X_{OUT}, Y_{OUT}	V_S = 5 V	80	100	130	mV/*g*
Sensitivity Change Due to Temperature[3]	V_S = 5 V		±0.3		*%*
ZERO *g* BIAS LEVEL (RATIOMETRIC)	Each axis				
0 *g* Voltage at X_{OUT}, Y_{OUT}	V_S = 5 V	2.3	2.5	2.7	V
0 *g* Offset vs. Temperature			±2		m*g*/°C
NOISE					
Output Noise	<4 kHz, V_S = 5 V			TBD	mV rms
Noise Density			500		µ*g*/√Hz rms
FREQUENCY RESPONSE[4]					
C_X, C_Y Range[5]		1		10,000	nF
R_{FILT} Tolerance	32 kΩ nominal		± 15		%
Sensor Resonant Frequency			11		kHz
SELF TEST[6]					
Logic Input Low				1	V
Logic Input High		4			V
ST Input Resistance to GND		30	50		kΩ
Output Change at X_{OUT}, Y_{OUT}	ST0 to ST 1	40	80	200	mV
OUTPUT AMPLIFIER					
Output Swing Low	No load	0.05	0.2		V
Output Swing High	No load		4.5	4.8	V
POWER SUPPLY (V_{DD})					
Operating Voltage Range		3		6	V
Quiescent Supply Current			0.7	1.1	mA
Turn-On Time[7]			20		ms

[1] Guaranteed by measurement of initial offset and sensitivity.
[2] Sensitivity is essentially ratiometric to V_S. For V_S = 4.75 V to 5.25 V,.
[3] Defined as the output change from ambient-to-maximum temperature or ambient-to-minimum temperature.
[4] Actual frequency response controlled by user-supplied external capacitor (C_X, C_Y).
[5] Bandwidth = 1/(2 × π × 32 kΩ × C). For C_X, C_Y = 0.002 µF, bandwidth = 2500 Hz. Minimum/maximum values are not tested.
[6] Self-test response changes cubically with V_S.
[7] Larger values of C_X, C_Y increase turn-on time. Turn-on time is approximately 160 × C_X or C_Y + 4 ms, where C_X, C_Y are in µF.

ABSOLUTE MAXIMUM RATINGS

Table 2.

Parameter	Rating
Acceleration (Any Axis, Unpowered)	3500 *g*
Acceleration (Any Axis, Powered)	3500 *g*
Drop Test (Concrete Surface)	1.2 m
V_S	−0.3 V to +7.0 V
All Other Pins	(COM − 0.3 V) to (V_S + 0.3 V)
Output Short-Circuit Duration (Any Pin to Common)	Indefinite
Temperature Range (Powered)	−55°C to +125°C
Temperature Range (Storage)	−65°C to +150°C

Stresses above those listed under Absolute Maximum Ratings may cause permanent damage to the device. This is a stress rating only; functional operation of the device at these or any other conditions above those indicated in the operational section of this specification is not implied. Exposure to absolute maximum rating conditions for extended periods may affect device reliability.

Table 3. Package Characteristics

Package Type	θ_{JA}	θ_{JC}	Device Weight
8-Terminal Ceramic LCC	120°C/W	20°C/W	<1.0 gram

ESD CAUTION



ESD (electrostatic discharge) sensitive device. Charged devices and circuit boards can discharge without detection. Although this product features patented or proprietary protection circuitry, damage may occur on devices subjected to high energy ESD. Therefore, proper ESD precautions should be taken to avoid performance degradation or loss of functionality.

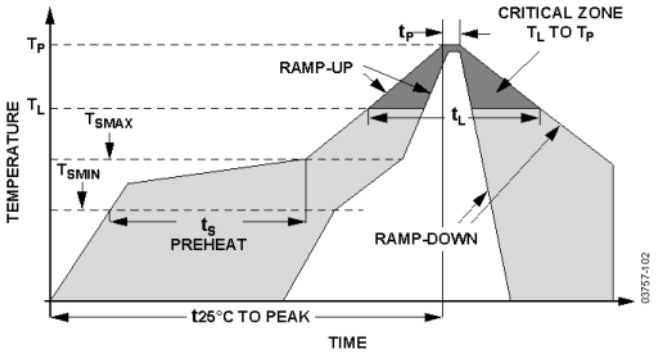

Figure 2. Recommended Soldering Profile

Table 4. Solder Profile Parameters

	Test Condition	
Profile Feature	**Sn63/Pb37**	**Pb-Free**
Average Ramp Rate (T_L to T_P)	3°C/second maximum	3°C/second maximum
Preheat		
Minimum Temperature (T_{SMIN})	100°C	150°C
Maximum Temperature (T_{SMAX})	150°C	200°C
Time (T_{SMIN} to T_{SMAX}) (t_S)	60 seconds to 120 seconds	60 seconds to 150 seconds
T_{SMAX} to T_L		
Ramp-Up Rate	3°C/second	3°C/second
Time Maintained above Liquidous (T_L)		
Liquidous Temperature (T_L)	183°C	217°C
Time (t_L)	60 seconds to 150 seconds	60 seconds to 150 seconds
Peak Temperature (T_P)	240°C + 0°C/−5°C	260°C + 0°C/−5°C
Time Within 5°C of Actual Peak Temperature (t_P)	10 seconds to 30 seconds	20 seconds to 40 seconds
Ramp-Down Rate	6°C/second maximum	6°C/second maximum
Time 25°C to Peak Temperature	6 minutes maximum	8 minutes maximum

PIN CONFIGURATIONS AND FUNCTION DESCRIPTIONS

Figure 3. ADXL205 Pin Configuration

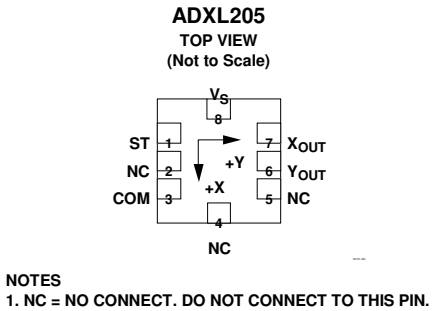

Table 5. ADXL205 Pin Function Descriptions

Pin No.	Mnemonic	Description
1	ST	Self Test
2	NC	Do Not Connect
3	COM	Common
4	NC	Do Not Connect
5	NC	Do Not Connect
6	Yout	Y Channel Output
7	X_{OUT}	X Channel Output
8	V_S	3 V to 6 V

Precision ±18g
Dual-Axis iMEMS®
Accelerometer

Data Sheet ADXL205

THEORY OF OPERATION

The ADXL205 is a complete acceleration measurement systems on a single, monolithic IC. The ADXL205 is a dual-axis accelerometer. Both parts contain a polysilicon surface-micromachined sensor and signal conditioning circuitry to implement an open-loop acceleration measurement architecture. The output signals are analog voltages that are proportional to acceleration. The ADXL205 is capable of measuring both positive and negative accelerations to at least ±18 *g*. The accelerometer can measure static acceleration forces, such as gravity, allowing it to be used as a tilt sensor.

The sensor is a surface-micromachined polysilicon structure built on top of the silicon wafer. Polysilicon springs suspend the structure over the surface of the wafer and provide a resistance against acceleration forces. Deflection of the structure is measured using a differential capacitor that consists of independent fixed plates and plates attached to the moving mass. The fixed plates are driven by 180° out-of-phase square waves. Acceleration deflects the beam and unbalances the differential capacitor, resulting in an output square wave whose amplitude is proportional to acceleration. Phase-sensitive demodulation techniques are then used to rectify the signal and determine the direction of the acceleration.

The output of the demodulator is amplified and brought off-chip through a 32 kΩ resistor. At this point, the user can set the signal bandwidth of the device by adding a capacitor. This filtering improves measurement resolution and helps prevent aliasing.

PERFORMANCE

Rather than using additional temperature compensation circuitry, innovative design techniques have been used to ensure that high performance is built in. As a result, there is essentially no quantization error or nonmonotonic behavior, and temperature hysteresis is very low.

Error! Reference source not found. shows the 0 *g* output performance of eight parts (x and y axes) over a −40°C to +85°C temperature range.

Error! Reference source not found. demonstrates the typical sensitivity shift over temperature for V_S = 5 V. Sensitivity stability is optimized for V_S = 5 V but is still very good over the specified range; it is typically better than ±1% over temperature at V_S = 3 V.

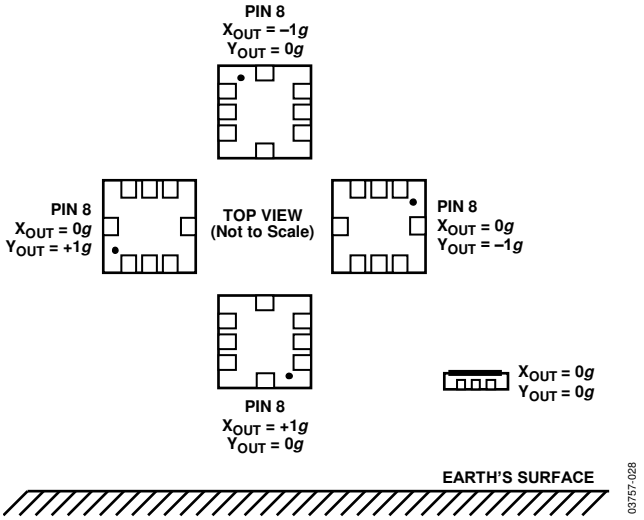

Figure 4. Output Response vs. Orientation

Rev. PrA
Information furnished by Analog Devices is believed to be accurate and reliable. However, no responsibility is assumed by Analog Devices for its use, nor for any infringements of patents or other rights of third parties that may result from its use. Specifications subject to change without notice. No license is granted by implication or otherwise under any patent or patent rights of Analog Devices. Trademarks and registered trademarks are the property of their respective owners.

One Technology Way, P.O. Box 9106, Norwood, MA 02062-9106, U.S.A.
Tel: 781.329.4700 www.analog.com
Fax: 781.461.3113 ©2004–2011 Analog Devices, Inc. All rights reserved.

APPLICATIONS INFORMATION

POWER SUPPLY DECOUPLING

For most applications, a single 0.1 µF capacitor, C_{DC}, adequately decouples the accelerometer from noise on the power supply. However, in some cases, particularly where noise is present at the 140 kHz internal clock frequency (or any harmonic thereof), noise on the supply can cause interference on the ADXL205 output. If additional decoupling is needed, a 100 Ω (or smaller) resistor or ferrite beads can be inserted in the supply line of the ADXL205. Additionally, a larger bulk bypass capacitor (in the 1 µF to 22 µF range) can be added in parallel to C_{DC}.

SETTING THE BANDWIDTH USING C_X AND C_Y

The ADXL205 has provisions for band limiting the X_{OUT} and Y_{OUT} pins. Capacitors must be added at these pins to implement low-pass filtering for antialiasing and noise reduction. The equation for the 3 dB bandwidth is

$$f_{-3\ dB} = 1/(2\pi(32\ \text{k}\Omega) \times C_{(X,\ Y)})$$

or more simply,

$$f_{-3\ dB} = 5\ \mu\text{F}/C_{(X,\ Y)}$$

The tolerance of the internal resistor (R_{FILT}) can vary typically as much as ±25% of its nominal value (32 kΩ); thus, the bandwidth varies accordingly. A minimum capacitance of 2000 pF for C_X and C_Y is required in all cases.

Table 6. Filter Capacitor Selection, C_X and C_Y

Bandwidth (Hz)	Capacitor (µF)
1	4.7
10	0.47
50	0.10
100	0.05
200	0.027
500	0.01

SELF TEST

The ST pin controls the self test feature. When this pin is set to V_S, an electrostatic force is exerted on the beam of the accelerometer. The resulting movement of the beam allows the user to test if the accelerometer is functional. The typical change in output is 750 m*g* (corresponding to 75 mV). This pin can be left open-circuit or connected to common in normal use.

Never expose the ST pin to voltages greater than V_S + 0.3 V. If the system design is such that this condition cannot be guaranteed (that is, multiple supply voltages are present), a low V_F clamping diode between ST and V_S is recommended.

DESIGN TRADE-OFFS FOR SELECTING FILTER CHARACTERISTICS: THE NOISE/BANDWIDTH TRADE-OFF

The accelerometer bandwidth selected ultimately determines the measurement resolution (smallest detectable acceleration). Filtering can be used to lower the noise floor, improving the resolution of the accelerometer. Resolution is dependent on the analog filter bandwidth at X_{OUT} and Y_{OUT}.

The output of the ADXL205 has a typical bandwidth of 2.5 kHz. The user must filter the signal at this point to limit aliasing errors. The analog bandwidth must be no more than half the analog-to-digital sampling frequency to minimize aliasing. The analog bandwidth can be further decreased to reduce noise and improve resolution.

The ADXL205 noise has the characteristics of white Gaussian noise, which contributes equally at all frequencies and is described in terms of µ*g*/√Hz (that is, the noise is proportional to the square root of the accelerometer bandwidth). Limit bandwidth to the lowest frequency needed by the application to maximize the resolution and dynamic range of the accelerometer.

With the single-pole roll-off characteristic, the typical noise of the ADXL205 is determined by

$$rmsNoise = (500\ \mu g/\sqrt{\text{Hz}}) \times (\sqrt{\text{BW} \times 1.6}\ )$$

At 100 Hz, the noise is

$$rmsNoise = (500\ \mu g/\sqrt{\text{Hz}}) \times (\sqrt{100 \times 1.6}\ ) = 6.3\ \text{m}g$$

Often, the peak value of the noise is desired. Peak-to-peak noise can only be estimated by statistical methods.

Table 8 gives the typical noise output of the ADXL205 for various C_X and C_Y values.

Table 8. Filter Capacitor Selection (C_X, C_Y)

Bandwidth (Hz)	C_X, C_Y (µF)	RMS Noise (m*g*)	Peak-to-Peak Noise Estimate (m*g*)
10	0.47	1.6	10.4
50	0.1	4.0	24
100	0.047	5.6	33.6
500	0.01	12.4	74.8

USING THE ADXL205 WITH OPERATING VOLTAGES OTHER THAN 5 V

The ADXL205 is tested and specified at V_S = 5 V; however, it can be powered with V_S as low as 3 V or as high as 6 V. Some performance parameters change as the supply voltage is varied.

The ADXL205 output is ratiometric, so the output sensitivity (or scale factor) varies proportionally to the supply voltage. At V_S = 3 V, the output sensitivity is typically 60 mV/*g*.

The zero *g* bias output is also ratiometric, so the zero *g* output is nominally equal to $V_S/2$ at all supply voltages.

The output noise is not ratiometric but is absolute in volts; therefore, the noise density decreases as the supply voltage

increases. This is because the scale factor (mV/*g*) increases while the noise voltage remains constant. At $V_S = 3$ V, the noise density is typically 840 μ*g*/√Hz.

Self test response in *g* is roughly proportional to the square of the supply voltage. However, when ratiometricity of sensitivity is factored in with supply voltage, self test response in volts is roughly proportional to the cube of the supply voltage. So at $V_S = 3$ V, the self test response is approximately equivalent to 150 mV or equivalent to 270 m*g* (typical).

The supply current decreases as the supply voltage decreases. Typical current consumption at $V_{DD} = 3$ V is 450 μA.

USING THE ADXL205 AS A DUAL-AXIS TILT SENSOR

One of the most popular applications of the ADXL205 is tilt measurement. An accelerometer uses the force of gravity as an input vector to determine the orientation of an object in space.

An accelerometer is most sensitive to tilt when its sensitive axis is perpendicular to the force of gravity, that is, parallel to the earth's surface. At this orientation, its sensitivity to changes in tilt is highest. When the accelerometer is oriented on axis to gravity, that is, near its +1 *g* or −1 *g* reading, the change in output acceleration per degree of tilt is negligible. When the accelerometer is perpendicular to gravity, its output changes nearly 17.5 m*g* per degree of tilt. At 45°, its output changes at only 12.2 m*g* per degree, and resolution declines.

Dual-Axis Tilt Sensor: Converting Acceleration to Tilt

When the accelerometer is oriented so both its x-axis and y-axis are parallel to the earth's surface, it can be used as a 2-axis tilt sensor with a roll axis and a pitch axis. Once the output signal from the accelerometer has been converted to an acceleration that varies between −1 *g* and +1 *g*, the output tilt in degrees is calculated as

$$PITCH = ASIN(A_X/1\ g)$$

$$ROLL = ASIN(A_Y/1\ g)$$

Be sure to account for overranges. It is possible for the accelerometers to output a signal greater than ±1 *g* due to vibration, shock, or other accelerations.

OUTLINE DIMENSIONS

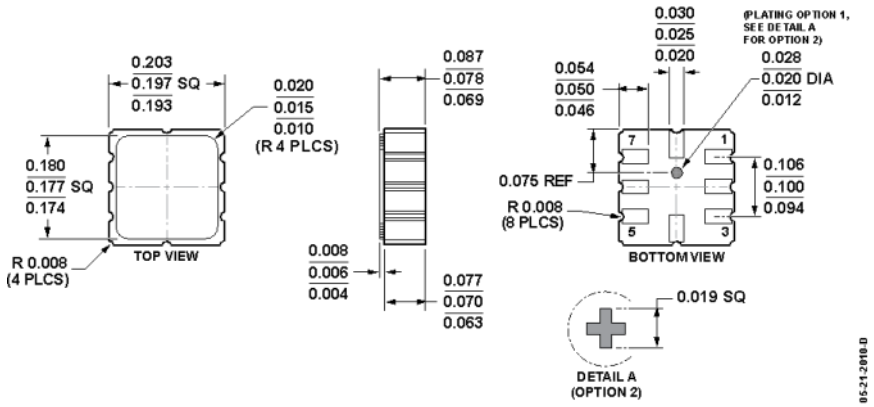

Figure 5. 8-Terminal Ceramic Leadless Chip Carrier [LCC]
(E-8-1)
Dimensions shown in inches

ORDERING GUIDE

Model[1, 2]	Axes	Device Generic	*g*-Range	Specified Voltage (V)	Temperature Range	Package Description	Package Option
ADXL205XCE	2	ADXL205	±16	5	−40°C to +85°C	8-Terminal Ceramic LCC	E-8-1
ADXL205XCE-REEL	2	ADXL205	±16	5	−40°C to +85°C	8-Terminal Ceramic LCC	E-8-1

[1] Z = RoHS Compliant Part.
[2] W = Qualified for Automotive Applications.

©2004–2011 Analog Devices, Inc. All rights reserved. Trademarks and registered trademarks are the property of their respective owners.
D03757-0-9/11(D)