AM-147 / AMC-147

Cascadable Amplifier
10 to 500MHz

Rev. V6

Features

- HIGH POWER OUTPUT: +21 dBm (TYP.)
- HIGH THIRD ORDER IP3: +33 dBm (TYP.)
- HIGH EFFICIENCY: 52 mA (TYP.) @ +15 Vdc

Description

M/A-COM's AM-147 is a coupler feedback amplifier with high intercept and compression points. The use of coupler feedback minimizes noise figure and current in a high intercept amplifier. This amplifier is packaged in a TO-8 package. Due to the internal power dissipation the thermal rise minimized. The ground plane on the PC board should be configured to remove heat from under the package. AM-147 is ideally suited for use where a high intercept, high reliability amplifier is required.

Product Image

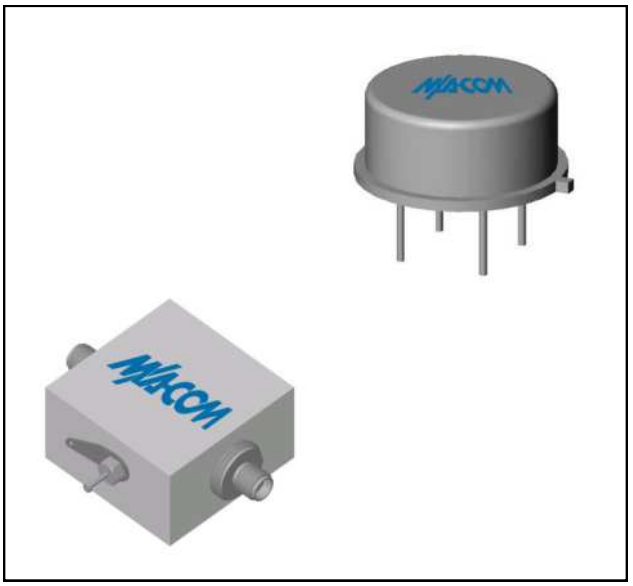

Ordering Information

Part Number	Package
AM-147-PIN	TO-8
AMC-147- SMA *	Connectorized

* SMA Connectorized part is not RoHs compliant.

Electrical Specifications: Z_0 = 50Ω, V_{CC} = +15 V_{DC}

Parameter	Units	Typical	Guaranteed	
		25ºC	0º to 50ºC	-54º to +85ºC*
Frequency	MHz	3-500	5-500	5-500
Small Signal Gain (min)	dB	17.0	16.0	15.5
Gain Flatness (max)	dB	±0.4	±0.8	±1.0
Reverse Isolation	dB	20.0	16.0	
Noise Figure (max)	dB	3.4	4.2	4.7
Power Output @ 1 dB comp. (min)	dBm	20.0	19.0	18.5
IP3	dBm	+31		
IP2	dBm	+40		
Second Order Harmonic IP	dBm	+46		
VSWR Input / Output (max)		1.7:1 / 1.7:1	1.9:1 / 1.9:1	2.0:1 / 2.0:1
DC Current @ 15 Volts (max)	mA	52	56	58

Absolute Maximum Ratings

Parameter	Absolute Maximum
Storage Temperature	-62ºC to +150ºC
Case Temperature	125ºC
DC Voltage	+17 V
Continuous Input Power	+13 dBm
Short Term Input power (1 minute max.)	100 mW
Peak Power (3 µsec max.)	0.5 W
"S" Series Burn-In Temperature (case)	125ºC

Thermal Data: V_{CC} = +15 V_{DC}

Parameter	Rating
Thermal Resistance θ_{jc}	143ºC/W
Transistor Power Dissipation P_d	0.47 W
Junction Temperature Rise Above Case T_{jc}	68ºC

* Over temperature performance limits for part number AMC-147, guaranteed from 0°C to +50°C only.

M/A-COM Technology Solutions Inc. (MACOM) and its affiliates reserve the right to make changes to the product(s) or information contained herein without notice.
Visit www.macom.com for additional data sheets and product information.

For further information and support please visit:
https://www.macom.com/support

Typical Performance Curves at +25°C

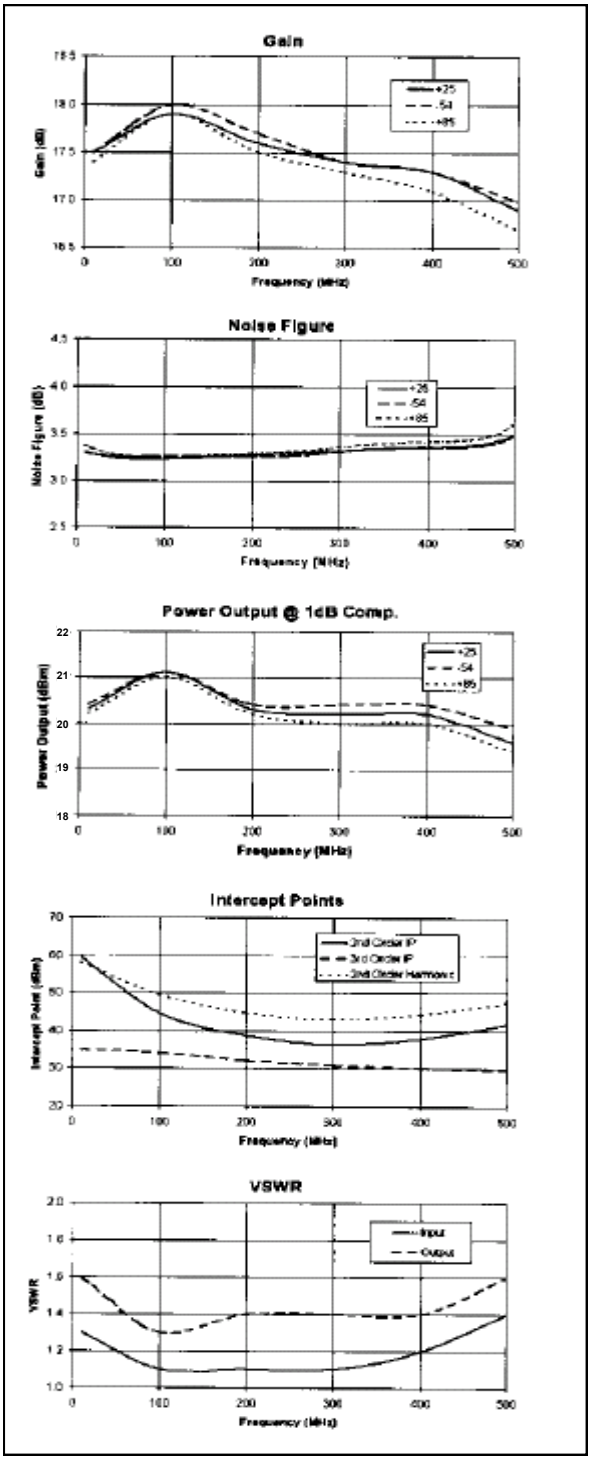

Outline Drawing: TO-8-1

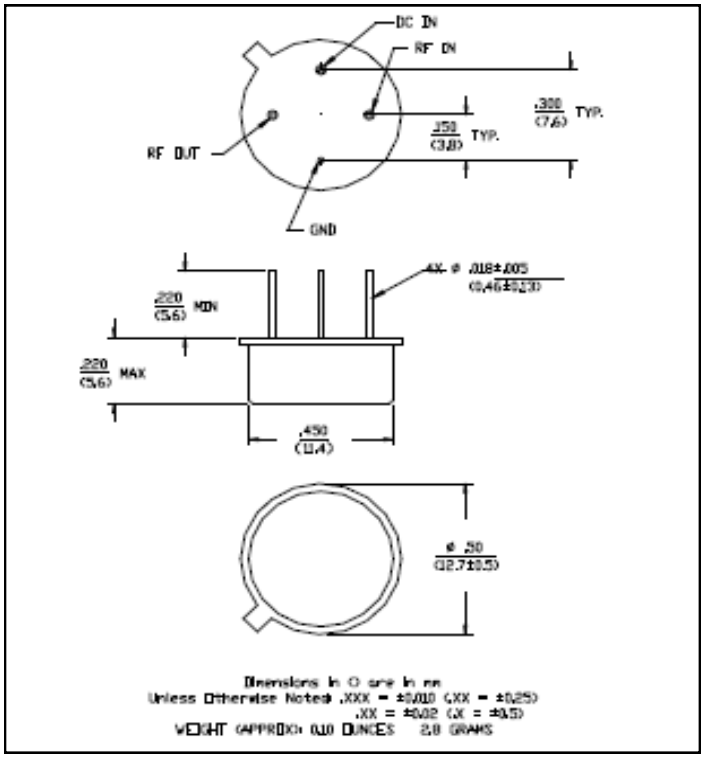

Outline Drawing: SMA Connectorized *

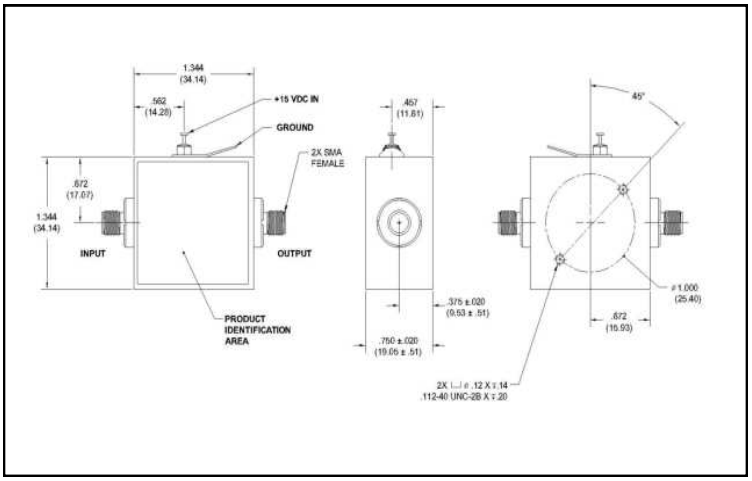

* Dimensions are inches (millimeters) ±0.015 (0.38) unless otherwise specified.

M/A-COM Technology Solutions Inc. (MACOM) and its affiliates reserve the right to make changes to the product(s) or information contained herein without notice.
Visit www.macom.com for additional data sheets and product information.

For further information and support please visit:
https://www.macom.com/support

M/A-COM Technology Solutions Inc. All rights reserved.

Information in this document is provided in connection with M/A-COM Technology Solutions Inc ("MACOM") products. These materials are provided by MACOM as a service to its customers and may be used for informational purposes only. Except as provided in MACOM's Terms and Conditions of Sale for such products or in any separate agreement related to this document, MACOM assumes no liability whatsoever. MACOM assumes no responsibility for errors or omissions in these materials. MACOM may make changes to specifications and product descriptions at any time, without notice. MACOM makes no commitment to update the information and shall have no responsibility whatsoever for conflicts or incompatibilities arising from future changes to its specifications and product descriptions. No license, express or implied, by estoppels or otherwise, to any intellectual property rights is granted by this document.

THESE MATERIALS ARE PROVIDED "AS IS" WITHOUT WARRANTY OF ANY KIND, EITHER EXPRESS OR IMPLIED, RELATING TO SALE AND/OR USE OF MACOM PRODUCTS INCLUDING LIABILITY OR WARRANTIES RELATING TO FITNESS FOR A PARTICULAR PURPOSE, CONSEQUENTIAL OR INCIDENTAL DAMAGES, MERCHANTABILITY, OR INFRINGEMENT OF ANY PATENT, COPYRIGHT OR OTHER INTELLECTUAL PROPERTY RIGHT. MACOM FURTHER DOES NOT WARRANT THE ACCURACY OR COMPLETENESS OF THE INFORMATION, TEXT, GRAPHICS OR OTHER ITEMS CONTAINED WITHIN THESE MATERIALS. MACOM SHALL NOT BE LIABLE FOR ANY SPECIAL, INDIRECT, INCIDENTAL, OR CONSEQUENTIAL DAMAGES, INCLUDING WITHOUT LIMITATION, LOST REVENUES OR LOST PROFITS, WHICH MAY RESULT FROM THE USE OF THESE MATERIALS.

MACOM products are not intended for use in medical, lifesaving or life sustaining applications. MACOM customers using or selling MACOM products for use in such applications do so at their own risk and agree to fully indemnify MACOM for any damages resulting from such improper use or sale.

M/A-COM Technology Solutions Inc. (MACOM) and its affiliates reserve the right to make changes to the product(s) or information contained herein without notice.
Visit www.macom.com for additional data sheets and product information.

For further information and support please visit:
https://www.macom.com/support