Mechanical Dimensions: Inches [mm]

Tolerances ±0.012 [0.3] Unless Otherwise Specified

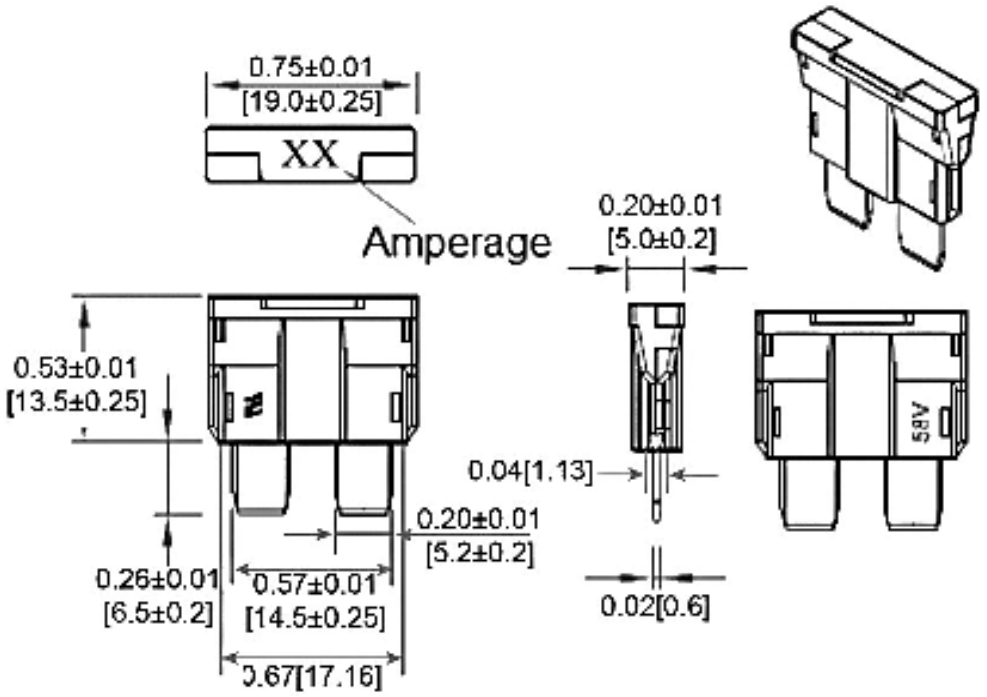

Part Numbers Information

Amperage	Body Color	Bulk Part #	Voltage Drop	Cold Resistance (mΩ)	I2T
500mA	Dark Blue	ANR58-UL-500mA	150mV	290	0.3
1A	Black	ANR58-UL-1A	125mV	100	2.3
2A	Gray	ANR58-UL-2A	120mV	43	9.6
3A	Violet	ANR58-UL-3A	110mV	30	16.2
4A	Pink	ANR58-UL-4A	110mV	22	36.8
5A	Tan	ANR58-UL-5A	110mV	16	62.5
6A	Light Red	ANR58-UL-6A	-	-	-
7A	Light Orange	ANR58-UL-7A	-	-	-
7.5A	Brown	ANR58-UL-7.5A	90mV	9	73.1
8A	Light Yellow	ANR58-UL-8A	-	-	-
10A	Red	ANR58-UL-10A	90mV	6.5	210
12A	Light Pink	ANR58-UL-12A	-	-	-
15A	Blue	ANR58-UL-15A	90mV	4	270
16A	Light Green	ANR58-UL-16A	-	-	-
20A	Yellow	ANR58-UL-20A	90mV	3	360
25A	Clear	ANR58-UL-25A	80mV	1.9	813
30A	Green	ANR58-UL-30A	80mV	1.65	1530
35A	Blue Green	ANR58-UL-35A	70mV	145	1960
40A	Orange	ANR58-UL-40A	70mV	1.25	3200

Regular (ATO/ATC Style) Blade Fuse

ANR58-UL

Electrical Specifications

Voltage Rating	58VDC
Interrupting Rating	1000A @ 58VDC
Standards	(Meets UL 248-1 Special Purpose Fuse requirements)
Operation Temperature	-40°C ~ 85°C

Material Specifications

Body Material	Nylon 66 with 30% Fiber Glass
Terminal Material	Zinc Alloy, Tin Plated

Time vs Percent of Rated Current

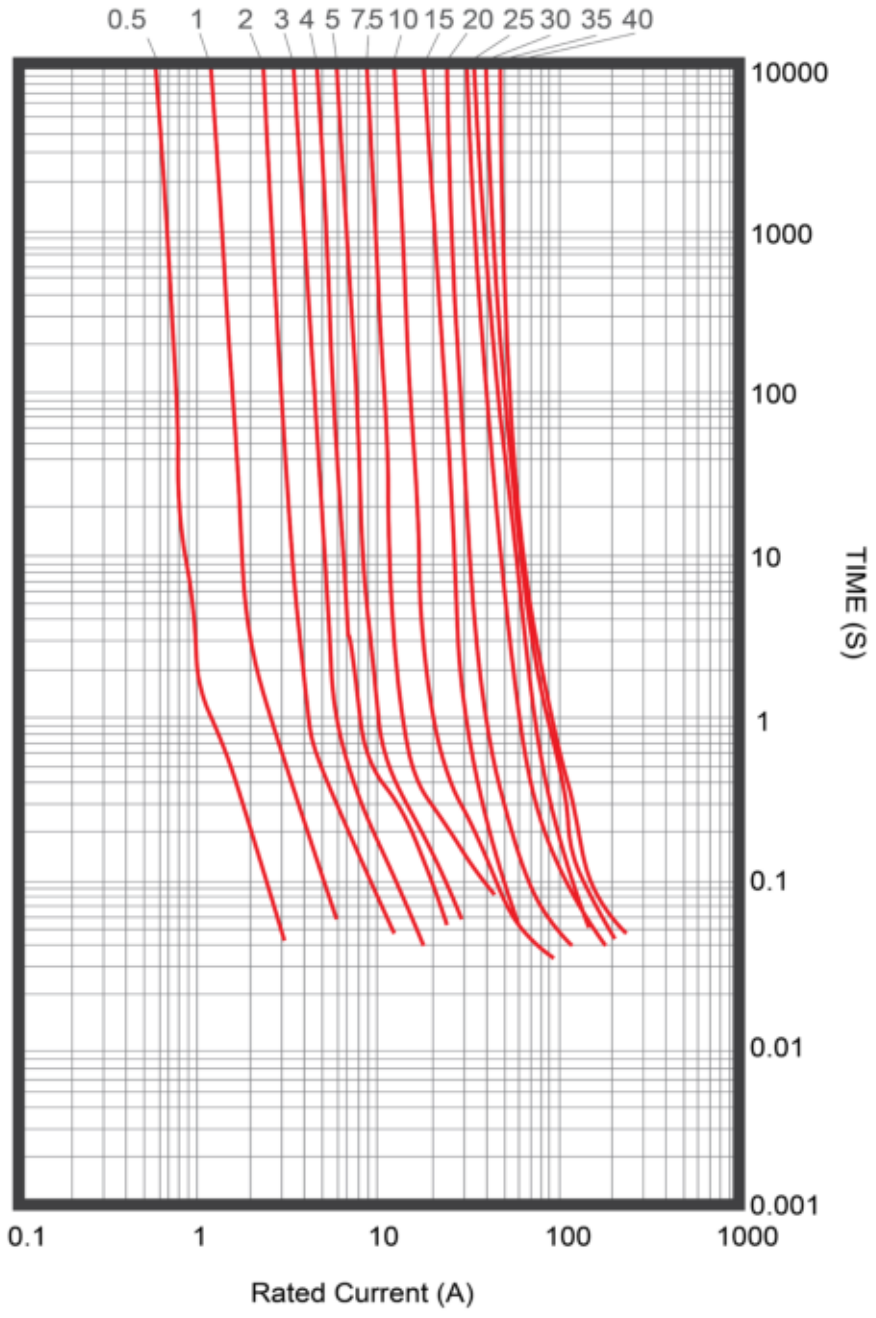

% of Rated Current	Min Hold Time	Max Hold Time
100%	Carry (35A ~ 40A)	-
110%	Carry (500mA~30A)	-
135%	750ms	3600s
200%	150ms	60s
350%	40ms	1s
600%	10ms	100ms

Temperature De-Rating Curve

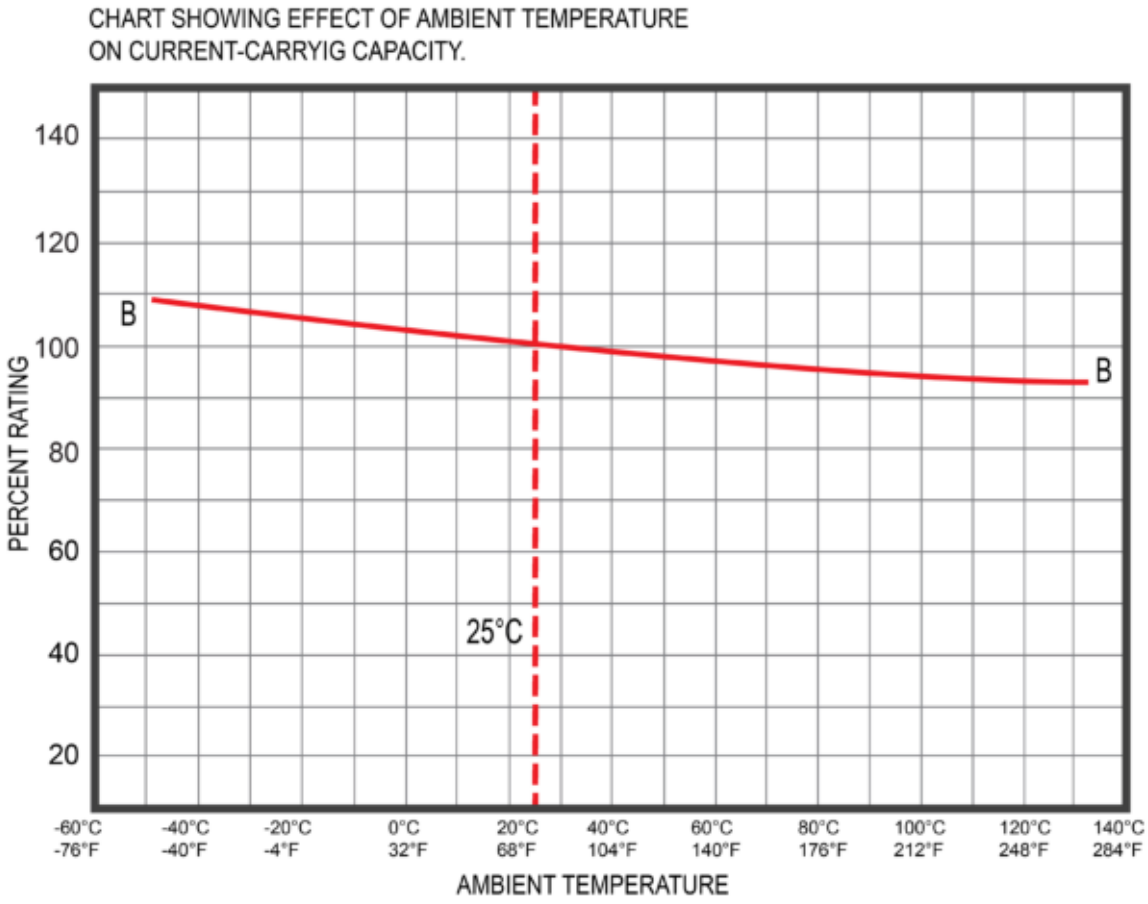

Disclaimer: Information provided is believed to be accurate and reliable. Users are responsible for confirming the suitability and performance of any OptiFuse product for their particular application. These products may not be appropriate for every use, and proper evaluation is recommended before implementation. For additional information, please visit optifuse.com/product-disclaimer.

Specifications are subject to change without notice

Rev	Date of issue	Revision Notes	Designed	Approved
E	04-08-2026	Add temperature derating curve	RC	OF