REVISIONS					
REV	ECO	DESCRIPTION	DATE	BY	APPR
A1	-	RELEASE NEW DRAWING	12/JUL/22	LOUIE	TOMMY

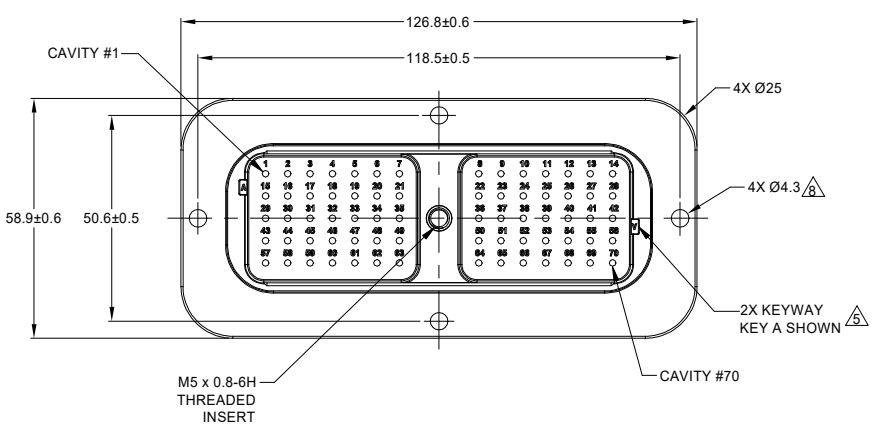

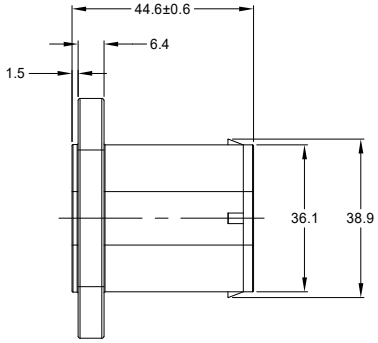

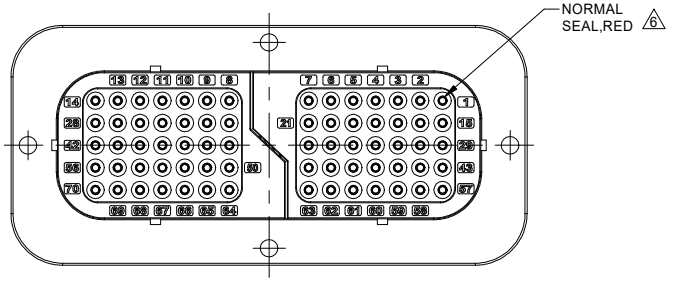

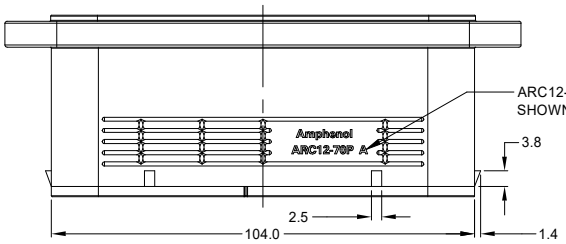

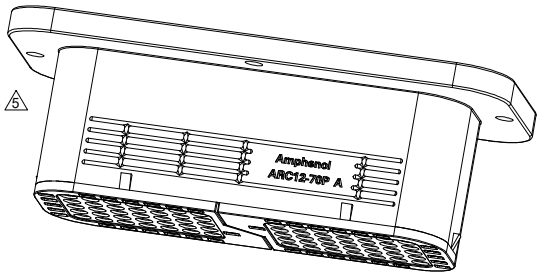

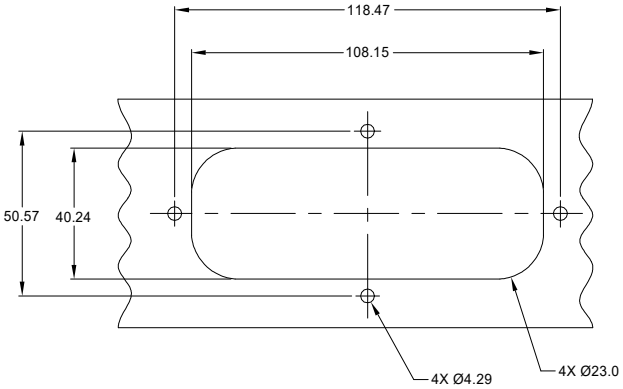

NOTES: UNLESS OTHERWISE SPECIFIED

1. MATERIAL:
   HOUSING: THERMOPLASTIC, BLACK
   SEAL: SILICONE RUBBER
   THREADED INSERT: STAINLESS STEEL

2. MODIFICATIONS: FLANGE MOUNT;
   NORMAL DIA. WIRE SEAL

3. SPECIFICATIONS:
   3.1 CURRENT RATING: 13 AMPS
   3.2 OPERATING TEMPERATURE: -55°C TO +125°C
   3.3 DIELECTRIC WITHSTANDING VOLTAGE: LESS THAN 2 MILLIAMPS CURRENT LEAKAGE @ 1500 VOLTS AC
   3.4 INSULATION RESISTANCE: 1000 MEGOHMS MIN @ 25°C
   3.5 MOISTURE RESISTANCE:
   IP68 (IM OF WATER FOR A PERIOD OF 24 HOURS, MATED CONDITION);
   IP69K(MATED CONDITION)
   3.6 MATING CYCLE DURABILITY: 100 CYCLES
   3.7 RoHS COMPLIANT

4. MATING PART: ARC16-70SX* PLUG
   (X = A,B,C,D KEYS ; * = ALL MODIFICATIONS)

5 SEE SHEET 2 FOR OTHER KEY ARRANGEMENTS

6 CONTACT SIZE AND REAR SEAL WIRE RANGE:

CONTACT SIZE	MIN. INSUL O.D.	MAX. INSUL O.D.	TYPICAL WIRE RANGE
16	2.54 mm (.100 in)	3.40 mm (.134 in)	14 - 20 AWG (2.0 - 0.5 mm^2)

7. RECEPTACLE IS SUPPLIED WITH DUST CAP

8 RECOMMENDED SCREW: 8-32 [M4]
TORQUE: 20 - 25 IN-LB [2.26 - 2.82 Nm]

9. ALL DIMENSIONS ARE FOR REFERENCE USE ONLY

	SEE SHEET 2		
	PART NUMBER	DESCRIPTION	ITEM
QUANTITY	MATERIALS LIST		

UNLESS OTHERWISE SPECIFIED
1) All dimensions are in metric(mm).
2) Tolerances are as follows:
1 PL DEC ±0.30 | Fractions ±1/64
2 PL DEC ±0.15 | Angles ±1°
3 PL DEC ±0.08
3) Note reference = X

MATERIAL SPECIFICATIONS:

PROCESS SPECIFICATIONS:

NEXT ASS'Y:

SIGNATURES		DATE
DRAWN:	LOUIE.YIN	12/JUL/22
CHECKED:	ORION.LI	13/JUL/22
ENGINEER:		
APPROVAL:	TOMMY.XIE	14/JUL/22
CUSTOMER:		

THIS DRAWING IS SUPPLIED FOR INFORMATION ONLY. DESIGN FEATURES, SPECIFICATIONS AND PERFORMANCE DATA SHOWN HEREON ARE THE PROPERTY OF THE AMPHENOL CORPORATION. NO RIGHTS OF REPRODUCTION ARE IMPLIED. ALL DIMENSIONS ARE SUBJECT TO NORMAL MANUFACTURING VARIATIONS.

Amphenol
Sine Systems - www.amphenol-sine.com
44724 Morley Drive
Clinton Township, MI 48036

70 POS, RECEPTACLE, PIN,ARC SERIES, KEYED, NORMAL SEAL,BLACK

SIZE	TYPE	DWG NO:	REVISION
B	C-	ARC12-70PX	A1

SCALE: NONE SHEET 1 OF 2

TITLE: 70 POS, RECEPTACLE, PIN,ARC SERIES,KEYED, NORMAL SEAL,BLACK
DWG NO: ARC12-70PX
REV: A1
SH: 1
OF: 2

REVISIONS					
REV	ECO	DESCRIPTION	DATE	BY	APPR
A1	-	RELEASE NEW DRAWING	12/JUL/22	LOUIE	TOMMY

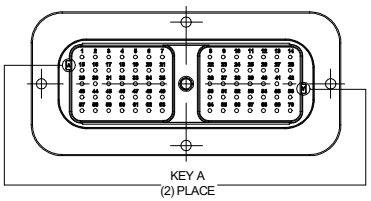

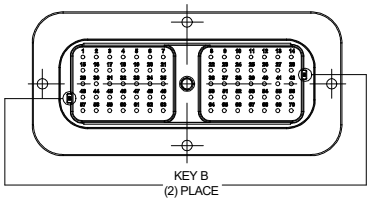

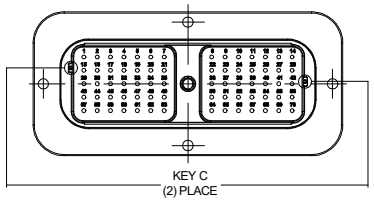

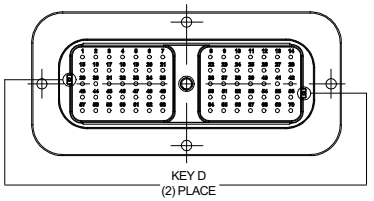

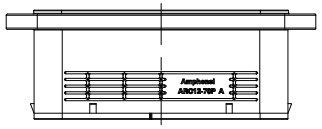

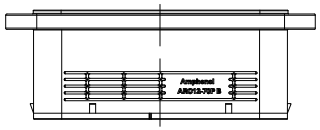

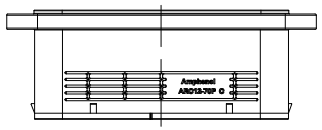

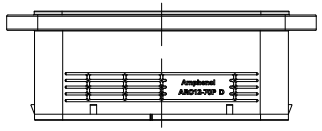

ARC12-70PX VARIANTS	
PART NUMBER	REF
ARC12-70PA	DRC12-70PA

ARC12-70PX VARIANTS	
PART NUMBER	REF
ARC12-70PB	DRC12-70PB

ARC12-70PX VARIANTS	
PART NUMBER	REF
ARC12-70PC	DRC12-70PC

ARC12-70PX VARIANTS	
PART NUMBER	REF
ARC12-70PD	DRC12-70PD

	ARC12-70PX		
	PART NUMBER	DESCRIPTION	ITEM
QUANTITY	MATERIALS LIST		

UNLESS OTHERWISE SPECIFIED
1) All dimensions are in metric(mm).
2) Tolerances are as follows:
1 PL DEC ±0.30 | Fractions ±1/64
2 PL DEC ±0.15 | Angles ±1°
3 PL DEC ±0.08
3) Note reference = X

MATERIAL SPECIFICATIONS:

PROCESS SPECIFICATIONS:

NEXT ASS'Y:

SIGNATURES		DATE
DRAWN:	LOUIE.YIN	12/JUL/22
CHECKED:	ORION.LI	13/JUL/22
ENGINEER:		
APPROVAL:	TOMMY.XIE	14/JUL/22
CUSTOMER:		

THIS DRAWING IS SUPPLIED FOR INFORMATION ONLY. DESIGN FEATURES, SPECIFICATIONS AND PERFORMANCE DATA SHOWN HEREON ARE THE PROPERTY OF THE AMPHENOL CORPORATION. NO RIGHTS OF REPRODUCTION ARE IMPLIED. ALL DIMENSIONS ARE SUBJECT TO NORMAL MANUFACTURING VARIATIONS.

Amphenol
Sine Systems - www.amphenol-sine.com
44724 Morley Drive
Clinton Township, MI 48036

70 POS, RECEPTACLE, PIN,ARC SERIES, KEYED, NORMAL SEAL,BLACK

SIZE	TYPE	DWG NO:	REVISION
B	C-	ARC12-70PX	A1

SCALE: NONE SHEET 2 OF 2

TITLE: 70 POS, RECEPTACLE, PIN,ARC SERIES,(KEYED), NORMAL SEAL,BLACK
DWG NO: ARC12-70PX
REV: A1
SH: 2
OF: 2

AT, ATV, AHD, ARB, ARC, DuraMate™ and PanelMate™ Series

Size 16 Contact & Tooling Options

Contacts - Machined

Part Number	Type	Style	Contact Size	Amp	Wire Range (AWG)	Wire Range (mm^2)	Insulation OD (mm)	Plating	Reel Size	Packaging
AT60-215-16141	Pin	Machined	Size 16	13A	14AWG	-	-	Nickel-Plated	-	-
AT60-215-1631	Pin	Machined	Size 16	13A	14AWG	-	-	Gold-Plated	-	-
AT60-202-16NKIT	Pin	Machined	Size 16	13A	16-20AWG	-	-	Nickel-Plated	-	-
AT60-202-16141	Pin	Machined	Size 16	13A	16-20AWG	-	-	Nickel-Plated	-	-
AT60-202-1631	Pin	Machined	Size 16	13A	16-20AWG	-	-	Gold-Plated	-	-
AT60-202-16141-22	Pin	Machined	Size 16	13A	22-24AWG	-	-	Nickel-Plated	-	-
AT60-202-1631-22	Pin	Machined	Size 16	13A	22-24AWG	-	-	Gold-Plated	-	-
AT62-209-16141	Socket	Machined	Size 16	13A	14AWG	-	-	Nickel-Plated	-	-
AT62-209-1631	Socket	Machined	Size 16	13A	14AWG	-	-	Gold-Plated	-	-
AT62-201-16NKIT	Socket	Machined	Size 16	13A	16-20AWG	-	-	Nickel-Plated	-	-
AT62-201-16141	Socket	Machined	Size 16	13A	16-20AWG	-	-	Nickel-Plated	-	-
AT62-201-1631	Socket	Machined	Size 16	13A	16-20AWG	-	-	Gold-Plated	-	-
AT62-201-16141-22	Socket	Machined	Size 16	13A	22-24AWG	-	-	Nickel-Plated	-	-
AT62-201-1631-22	Socket	Machined	Size 16	13A	22-24AWG	-	-	Gold-Plated	-	-
Contacts - Stamped & Formed										
AT60-14-0122	Pin	S&F	Size 16	13A	14-18AWG	2.0-0.75mm^2	2.40 - 3.81mm	Nickel-Plated	-	-
AT60-14-0122-LP	Pin	S&F	Size 16	13A	14-18AWG	2.0-0.75mm^2	2.40 - 3.81mm	Nickel-Plated	-	Loose Piece
AT60-14-0144	Pin	S&F	Size 16	13A	14-18AWG	2.0-0.75mm^2	2.40 - 3.81mm	Gold-Plated	-	-
AT60-14-0144-LP	Pin	S&F	Size 16	13A	14-18AWG	2.0-0.75mm^2	2.40 - 3.81mm	Gold-Plated	-	Loose Piece
AT60-16-0122	Pin	S&F	Size 16	13A	16-18AWG	1.5-0.75mm^2	1.91 - 3.55mm	Nickel-Plated	-	-
AT60-16-0122-LP	Pin	S&F	Size 16	13A	16-18AWG	1.5-0.75mm^2	1.91 - 3.55mm	Nickel-Plated	-	Loose Piece
AT60-16-0144	Pin	S&F	Size 16	13A	16-18AWG	1.5-0.75mm^2	1.91 - 3.55mm	Gold-Plated	-	-
AT60-16-0144-LP	Pin	S&F	Size 16	13A	16-18AWG	1.5-0.75mm^2	1.91 - 3.55mm	Gold-Plated	-	Loose Piece
AT60-16-0622	Pin	S&F	Size 16	13A	16-20AWG	1.0-0.5mm^2	1.40 - 2.54mm	Nickel-Plated	-	-
AT60-16-0622-LP	Pin	S&F	Size 16	13A	16-20AWG	1.0-0.5mm^2	1.40 - 2.54mm	Nickel-Plated	-	Loose Piece
AT60-16-0644	Pin	S&F	Size 16	13A	16-20AWG	1.0-0.5mm^2	1.40 - 2.54mm	Gold-Plated	-	-
AT60-16-0644-LP	Pin	S&F	Size 16	13A	16-20AWG	1.0-0.5mm^2	1.40 - 2.54mm	Gold-Plated	-	Loose Piece
AT60-16-0322	Pin	S&F	Size 16	13A	20-22AWG	0.5-0.35mm^2	1.31 - 1.50mm	Nickel-Plated	-	-
AT60-16-0344	Pin	S&F	Size 16	13A	20-22AWG	0.5-0.35mm^2	1.31 - 1.50mm	Gold-Plated	-	-
AT60-16-0377	Pin	S&F	Size 16	13A	20-22AWG	0.5-0.35mm^2	1.31 - 1.50mm	Tin-Plated	-	-
AT60-16-0822	Pin	S&F	Size 16	13A	20-22AWG	0.5-0.35mm^2	1.31 - 1.50mm	Nickel-Plated	4,000	-
AT60-16-0844	Pin	S&F	Size 16	13A	20-22AWG	0.5-0.35mm^2	1.31 - 1.50mm	Gold-Plated	4,000	-
AT62-14-0122	Socket	S&F	Size 16	13A	14-18AWG	2.0-0.75mm^2	2.40 - 3.81mm	Nickel-Plated	-	-
AT62-14-0122-LP	Socket	S&F	Size 16	13A	14-18AWG	2.0-0.75mm^2	2.40 - 3.81mm	Nickel-Plated	-	Loose Piece
AT62-14-0144	Socket	S&F	Size 16	13A	14-18AWG	2.0-0.75mm^2	2.40 - 3.81mm	Gold-Plated	-	-
AT62-14-0144-LP	Socket	S&F	Size 16	13A	14-18AWG	2.0-0.75mm^2	2.40 - 3.81mm	Gold-Plated	-	Loose Piece
AT62-16-0122	Socket	S&F	Size 16	13A	16-18AWG	1.5-0.75mm^2	1.91 - 3.55mm	Nickel-Plated	-	-
AT62-16-0122-LP	Socket	S&F	Size 16	13A	16-18AWG	1.5-0.75mm^2	1.91 - 3.55mm	Nickel-Plated	-	Loose Piece
AT62-16-0144	Socket	S&F	Size 16	13A	16-18AWG	1.5-0.75mm^2	1.91 - 3.55mm	Gold-Plated	-	-

AT, ATV, AHD, ARB, ARC, DuraMate™ and PanelMate™ Series

Size 16 Contact & Tooling Options, cont.

Contacts - Stamped & Formed, cont.

Part Number	Type	Style	Contact Size	Amp	Wire Range (AWG)	Wire Range (mm^2)	Insulation OD (mm)	Plating	Reel Size	Packaging
AT62-16-0144-LP	Socket	S&F	Size 16	13A	16-18AWG	1.5-0.75mm^2	1.91 - 3.55mm	Gold-Plated	-	Loose Piece
AT62-16-0622	Socket	S&F	Size 16	13A	16-20AWG	1.0-0.5mm^2	1.40 - 2.54mm	Nickel-Plated	-	-
AT62-16-0622-LP	Socket	S&F	Size 16	13A	16-20AWG	1.0-0.5mm^2	1.40 - 2.54mm	Nickel-Plated	-	Loose Piece
AT62-16-0644	Socket	S&F	Size 16	13A	18-20AWG	1.0-0.5mm^2	1.40 - 2.54mm	Gold-Plated	-	-
AT62-16-0644-LP	Socket	S&F	Size 16	13A	18-20AWG	1.0-0.5mm^2	1.40 - 2.54mm	Gold-Plated	-	Loose Piece
AT62-16-0822	Socket	S&F	Size 16	13A	20-22AWG	0.5-0.35mm^2	1.31 - 1.50mm	Nickel-Plated	4,000	-
AT62-16-0844	Socket	S&F	Size 16	13A	20-22AWG	0.5-0.35mm^2	1.31 - 1.50mm	Gold-Plated	4,000	-

Tooling

Part Number	Tool Name	Style	Contact Size	Wire Range (AWG)	Material	Color
AUTK-16	Hand Crimp Tool	Machined	Size 16	-	-	-
AUTK-100	Universal Heavy Duty Contact Crimping Tool Kit	Machined	Size 12/16/20	12-26AWG	-	-
CA-5D12	Universal Hand Crimp Tool	Machined	Size 12/16/20	12-26AWG	-	-
CA-5E12	Pneumatic Crimp Tool	Machined	Size 12/16/20	12-26AWG	-	-
MFX-3950-G or K	Crimp Die Press Applicator	S&F	Size 16	18-20AWG	-	-
MFX-3953-G or K	Crimp Die Press Applicator	S&F	Size 16	16-18AWG	-	-
MFX-3975-G or K	Crimp Die Press Applicator	S&F	Size 16	14-16AWG	-	-
MFX-3990	Crimp Die	S&F	Size 16	20-22AWG	-	-
ATT-16-00	Hand Crimp Tool	S&F	Size 16	14-16AWG	-	-
ATT-16-01	Hand Crimp Tool	S&F	Size 16	18-20AWG	-	-
ATT-1612-03	Hand Crimp Tool	S&F	Size 12/16	20-22AWG	-	-
ATRT-100	Contact and Wedgelock Extraction Tool	Universal	Universal	-	Steel	Silver
AT11-310-1605	Contact Extraction Tool	Universal	Size 16	-	Plastic	Lt Blue
A114017	Seal Plug	Universal	Size 12/16	-	Thermoplastic	White
A114017-SR	Seal Plug	Universal	Size 16	-	Thermoplastic	Black
AT13-217-1605	Locking Seal Plug	Universal	Size 16	-	Thermoplastic	Grey
AT13-217-1605-SR	Locking Seal Plug	Universal	Size 16	-	Thermoplastic	Red